T-Splitters

BKS-S 92-TA1
Order Code: BCC00WH

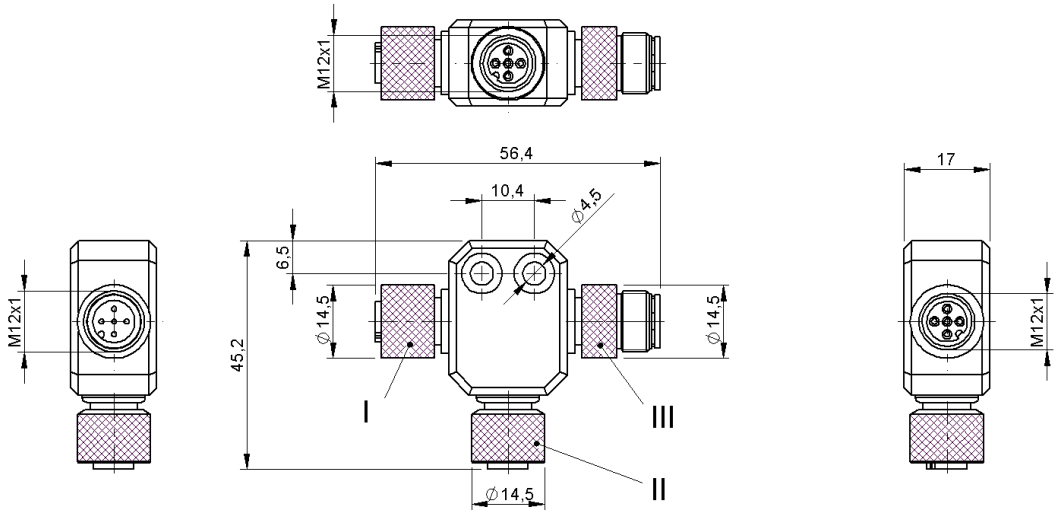

Basic features

Application	DeviceNet
Approval/Conformity	EAC WEEE

Display/Operation

Power indicator	no

Electrical connection

Connection 1	M12x1-Female, 5-pin, A-coded
Connection 2	M12x1-Female, 5-pin, A-coded
Connection 3	M12x1-Male, 5-pin, A-coded
Number of pins	5/5/5

Electrical data

Operating voltage Ub	30 VDC

Environmental conditions

Ambient temperature	-36...60 °C
Protection degree	IP68

Material

Material contacts	Bronze, gold plated
Material cover nut	Zinc epoxy coated
Material grip	PVC

Remarks

Enclosure rating per IEC 60529, only in screwed state with the associated mating piece.

BKS-S 92-TA1
Order Code: BCC00WH

Connector Drawings

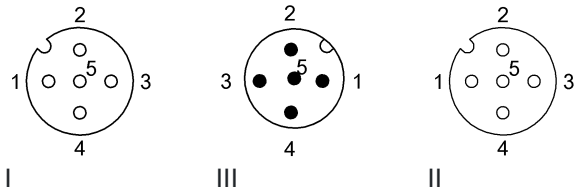

Wiring Diagrams

