Opto-Sensor
Opposed Mode Sensor (Emitter/Receiver)
Miniature Sensor
VSM5RP6R

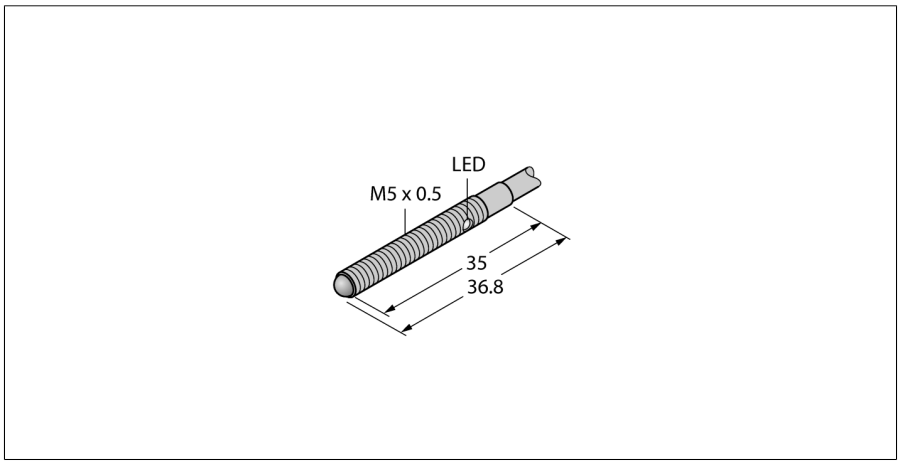

- **Stainless steel housing V2A**
- **Protection class IP67**
- **Cable, 2 m, 3-wire**
- **Lens, sapphire crystal glass**
- **Operating voltage: 10…30 VDC**
- **PNP switching output, dark operation**

Wiring Diagram

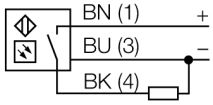

Type designation	VSM5RP6R
Ident no.	3013330
Function	Opposed mode sensor
Ambient temperature	0…+55 °C
Operating voltage	10…30 VDC
Residual ripple	< 10 % U_{ss}
DC rated operational current	≤ 100 mA
No-load current I_0	≤ 15 mA
Short-circuit protection	yes/ yes
Reverse polarity protection	yes
Output function	NO contact, dark operation, PNP
Switching frequency	≤ 250 Hz
Readiness delay	≤ 20 ms
Response time typical	< 2.5 ms
Approvals	CE, UL
Design	Tube, VSM
Dimensions	35 mm
Housing diameter	Ø 5 mm
Housing material	Metal, Stainless steel
Lens	glass, Sapphire
Electrical connection	Cable, PVC
Cable length	2 m
Number of cores	3
Core cross-section	0.34 mm²
Protection class	IP67
Switching state	LED, Yellow
Excess gain indication	LED, flashing

Functional principle

Opposed mode sensors consist of an emitter and receiver. They are installed opposite to each other whereby the emitted light aims directly at the receiver. When an object interrupts or weakens the light beam, the sensor switches. Opposed mode sensors are the most reliable photoelectric sensors for detection of opaque targets. The excellent light/dark contrast and the high excess gain allow operation over larger distances and under difficult conditions.

Excess Gain Curve

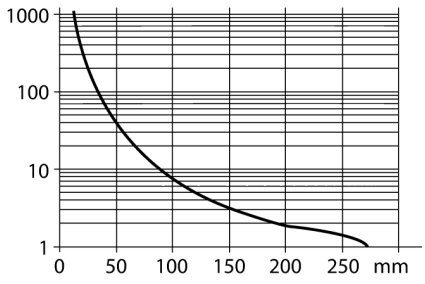

Edition • 2022-08-19T10:47:25+02:00

Hans Turck GmbH & Co.KG ● D-45472 Mülheim an der Ruhr ● Witzlebenstraße 7 ● Tel. 0208 4952-0 ● Fax 0208 4952-264 ● more@turck.com ● www.turck.com