Q25SN6LP W/30
Photoelectric Sensor – Retroreflective Sensor with Polarizing Filter

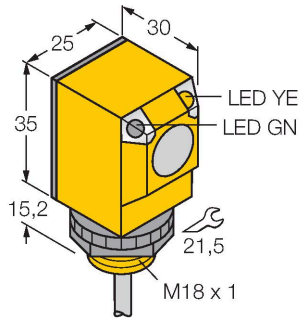

Technical data

Type	Q25SN6LP W/30
ID	3033864
Optical data	
Function	Retroreflective Sensor
Operating mode	Polarized
Reflector included in delivery	no
Light type	Red polarized
Wavelength	680 nm
Range	50…2000 mm
Electrical data	
Operating voltage	10…30 VDC
No-load current	≤ 25 mA
Short-circuit protection	yes / Cyclic
Reverse polarity protection	yes
Output function	Connection programmable, NPN
Switching frequency	≤ 160 Hz
Readiness delay	≤ 100 ms
Response time typical	< 3 ms
Overcurrent release	> 220 mA
Mechanical data	
Design	Rectangular, Q25
Dimensions	Ø 18 x 30 x 25 x 50.2 mm
Housing material	Plastic, Thermoplastic material
Lens	plastic, Acrylic
Electrical connection	Cable, 9 m, PVC
Number of cores	4

Features

- Cable, 2 m
- Protection class IP67
- Ambient temperature: -40…+70 °C
- Selectable light/dark operation or light operation with alarm function
- Operating voltage: 10…30 VDC
- NPN switching output, changeover

Wiring diagram

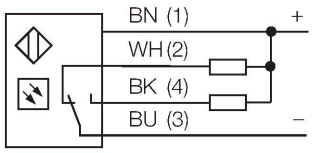

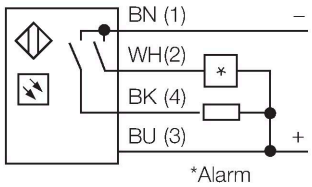

Functional principle

Retro-reflective sensors incorporate emitter and receiver in a single compact housing. The light beam of the emitter is directed towards a reflector which returns the light back to the receiver. An object is detected when it interrupts this beam. Retro-reflective sensors have a high function gain and good contrast performance. Further it is merely required to install and wire a single device.
Excess gain curve
Excess gain in relation to the distance

Q25SN6LP W/30 | 19-01-2022 01-11 | Technical modifications reserved

Technical data

Core cross-section	0.5 mm^2
Ambient temperature	-40…+70 °C
Protection class	IP69
Special features	Chemical-resistant Encapsulated Wash down
Power-on indication	LED, Green
Switching state	LED, Yellow
Error indication	LED, green, Flashing
Excess gain indication	LED
Alarm display	LED yellow Flashing
Tests/approvals	
Approvals	CE, UL, CSA

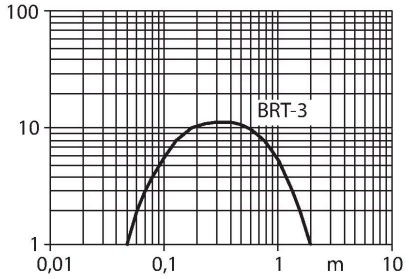

Accessories

SMB18A	3033200

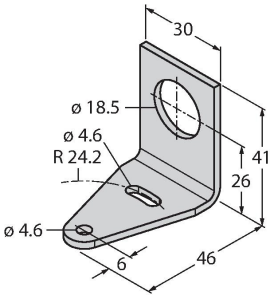

Mounting bracket, rectangular, stainless steel, for sensors with 18 mm thread

SMB18AFAM10	3012558

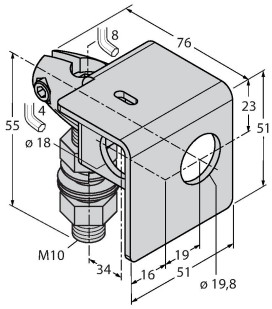

Mounting bracket, material VA 1.4401, for M10 x 1.5 thread, thread length 18 mm

SMB18SF	3052519

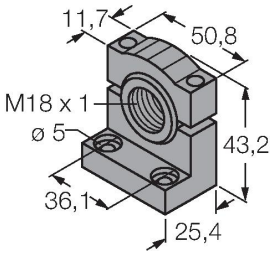

Mounting bracket, PBT black, for sensors with 18 mm thread, rotatable

Q25SN6LP W/30 | 19-01-2022 01-11 | Technical modifications reserved

Accessories

Dimension drawing	Type	ID	
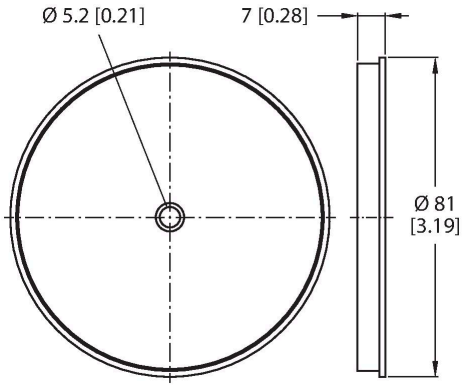	BRT-3	3016164	Round reflector, reflection coefficient 1.0, material acrylic, ambient temperature -20…+60 °C

Q25SN6LP W/30 | 19-01-2022 01-11 | Technical modifications reserved