K50RPLPGRYC3QPMA
Pick-to-Light – Placement Sensor
Retroreflective Sensor with Polarizing Filter

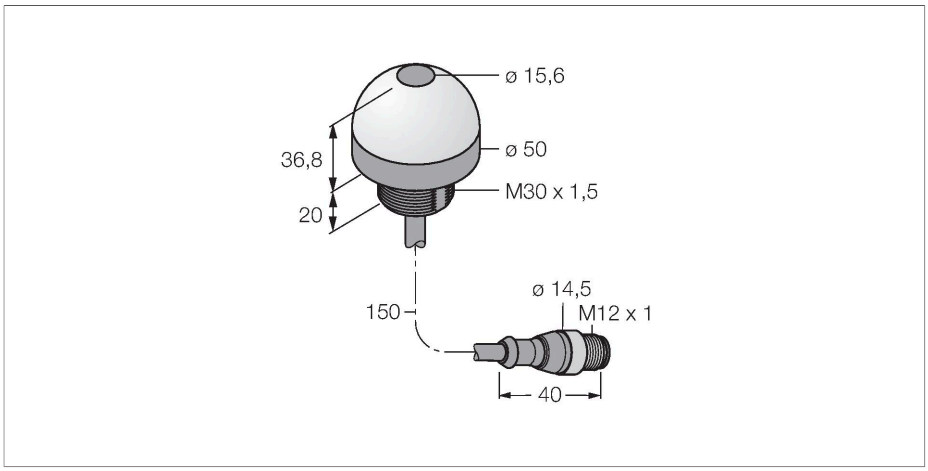

Technical data

Type	K50RPLPGRYC3QPMA
ID	3079014
Signal and display data	
Purpose	Pick-to-Light
Function	Retroreflective Sensor
Max. range	2000 mm
Light type	Red
Number of beams	1
Switch Function	Momentary
Features of color 1	Green, Permanently on
Features of color 2	Red
Features of color 3	Yellow
Special features	I/O module-compatible Wash down
Electrical data	
Operating voltage	12…30 VDC
DC rated operational current	≤ 150 mA
Max. current consumption per color	90 mA
Output function	NC contact, PNP
Input type	PNP
Response time typical	< 10 ms
Mechanical data	
Design	Dome, K50
Dimensions	Ø 50 x 56.8 x 56.8 mm
Housing material	Plastic, PC, Black

Features

- Protection class IP67
- Cable with male end M12 x 1, 4-pin, PUR, 150 mm
- Job light, green
- Mispick, red
- Actuation, yellow
- Operating voltage 12…30 VDC
- PNP switching
- NC contact

Wiring diagram

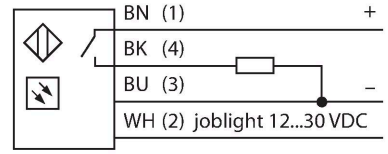

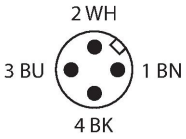

Functional principle

The K50 pick-and-place sensor is suitable for many mounting and component placement applications. The green work light or other signal lights are reflected perfectly by the entire dome (depending on the version). The transistor output can be easily connected to a system control, which is programmed for a special task sequence. The work light of the sensor is located in or next to every bin at the operator's workstation and indicates: 1. The bins with the components to be picked up for a particular work step and 2. the sequence in which the components have to be picked up. If the operator removes a part from the bin, the K50 detects the hand in the bin and sends a signal to the control unit. The system then checks if the correct component has been picked up and – depending on the configuration – switches the corresponding work light off and the next one on, according to the assembly sequence. The work sequence control leads to increased efficiency, improved quality control and reduces rework and testing expenses.
The term work light therefore refers to the visual indicator of the bin from which a part should be removed next. The actuation indicator confirms the removal with a different color. The mispick indicator illuminates if a bin

K50RPLPGRYC3QPMA| 19-01-2022 07-25 | Technical modifications reserved

Technical data

Window material	Polycarbonate, diffuse
Electrical connection	Cable with connector, M12 × 1, 0.15 m, PUR
Number of cores	5
Ambient temperature	-40…+50 °C
Relative humidity	0…90 %
Protection class	IP67 IP69
Tests/approvals	
MTTF	146 years acc. to SN 29500 (Ed. 99) 40 °C
Approvals	CE, cULus listed

was reached into when the work light was not set.

Accessories

SMB30A 3032723

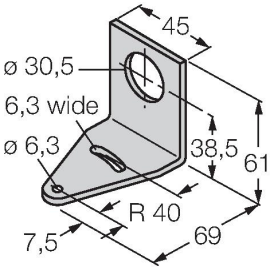

Mounting bracket, rectangular, stainless steel, for sensors with 30mm thread

SMB30SC 3052521

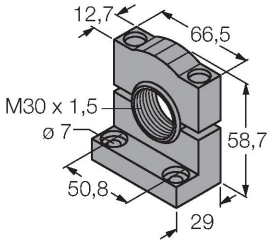

Mounting bracket, PBT black, for sensors with 30 mm thread, rotatable

SMB30FA 3074005

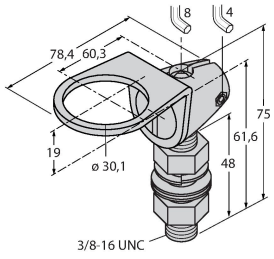

Montagewinkel; Werkstoff VA 1.4401

Accessories

Dimension drawing	Type	ID	
	RKC4.5T-2/TEL	6625016	Connection cable, female M12, straight, 5-pin, cable length: 2 m, sheath material: PVC, black; cULus approval; other cable lengths and qualities available, see www.turck.com

K50RPLPGRYC3QPMA| 19-01-2022 07-25 | Technical modifications reserved

Dimension drawing	Type	ID	
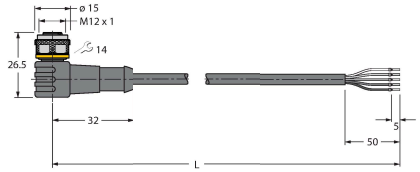	WKC4.5T-2/TEL	6625028	Connection cable, female M12, angled, 5-pin, cable length: 2 m, sheath material: PVC, black; cULus approval; other cable lengths and qualities available, see www.turck.com
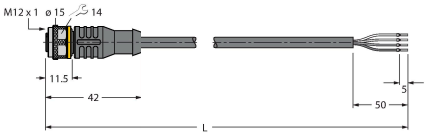	RKC4.4T-2/TEL	6625013	Connection cable, female M12, straight, 4-pin, cable length: 2 m, sheath material: PVC, black; cULus approval; other cable lengths and qualities available, see www.turck.com
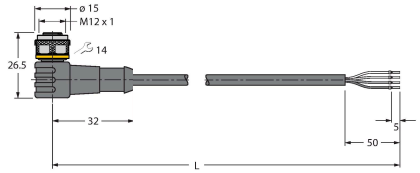	WKC4.4T-2/TEL	6625025	Connection cable, female M12, angled, 4-pin, cable length: 2 m, sheath material: PVC, black; cULus approval; other cable lengths and qualities available, see www.turck.com

Accessories

Dimension drawing	Type	ID	
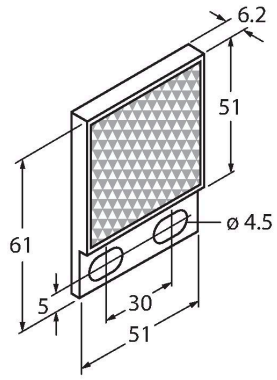	BRT-51X51BM	3071791	Rectangular reflector, reflection coefficient 2.0, material acrylic, ambient temperature -20 … +60 °C, microprism geometry

K50RPLPGRYC3QPMA| 19-01-2022 07-25 | Technical modifications reserved

Dimension drawing	Type	ID	
	BRT-84	3058979	Round reflector, reflection coefficient 1.4, material acrylic, ambient temperature -20 … +60 °C

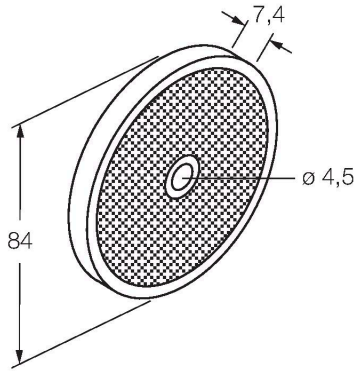

K50RPLPGRYC3QPMA| 19-01-2022 07-25 | Technical modifications reserved