Panasonic®

Instruction Manual

AC Servo Motor and Driver

MINAS A4 Series

- Thank you for buying and using Panasonic AC Servo Motor and Driver, MINAS A4 Series.
- Read through this Instruction Manual for proper use, especially read "Precautions for Safety" (P.8 to 11) without fail for safety purpose.
- Keep this Manual at an easily accessible place so as to be referred anytime as necessary.
- This product is for industrial equipment. Don't use this product at general household.

Content

[Before Using the Products]

page

Safety Precautions 8
Maintenance and Inspection 12
Introduction 14
Outline 14
On Opening the Package 14
Check of the Driver Model 14
Check of the Motor Model 15
Check of the Combination of the Driver and the Motor 16
Parts Description 18
Driver 18
Motor 20
Console 21
Installation 22
Driver 22
Motor 24
Console 26

[Preparation]

page

System Configuration and Wiring 28
Overall Wiring (Connecting Example of C-frame, 3-phase) 28
Overall Wiring (Connecting Example of E-frame) 30
Driver and List of Peripheral Equipments 32
Wiring of the Main Circuit (A to D-frame) 34
Wiring of the Main Circuit (E and F-frame) 35
Wiring to the Connector, CN X6 (Connection to Encoder) 38
Wiring to the Connector, CN X3 and 4 (Connection to PC, Host Controller or Console) 40
Wiring to the Connector, CN X5 (Connection to Host Controller) 41
Timing Chart 42
Built-in Holding Brake 46
Dynamic Brake 48
Caution on Homing 50
Setup of Parameter and Mode 51
Outline of Parameter 51
How to Set 51
How to Connect 51
Composition and List of Parameters 52
Setup of Torque Limit 57
How to Use the Front Panel and Console 58
Setup with the Front Panel 58
Setup with the Console 58
Initial Status of the Front Panel Display (7 Segment LED) 59
Initial Status of the Console Display (7 Segment LED) 59
Structure of Each Mode 60
Monitor Mode 63
Parameter Setup Mode 69

EEPROM Writing Mode 70
Auto-Gain Tuning Mode 71
Auxiliary Function Mode 73
Copying Function (Console Only) 79

[Connection and Setup of Position Control Mode]

page

Control Block Diagram of Position Control Mode 82

Wiring to the Connector, CN X5 83

Wiring Example to the Connector, CN X5 83
Interface Circuit 84
Input Signal and Pin No. of the Connector, CN X5 86
Output Signal and Pin No. of the Connector, CN X5 92
Connecting Example to Host Controller 96

Trial Run (JOG Run) at Position Control Mode 104

Inspection Before Trial Run 104
Trial Run by Connecting the Connector, CN X5 104

Real-Time Auto-Gain Tuning 106

Outline 106
Applicable Range 106
How to Operate 106
Adaptive Filter 107
Parameters Which are Automatically Set 107

Parameter Setup 108

Parameters for Functional Selection 108
Parameters for Adjustment of Time Constant of Gains and Filters 111
Parameters for Auto-Gain Tuning 112
Parameters for Adjustment (2nd Gain Switching Function) 115
Parameters for Position Control 116
Parameters for Velocity/Torque Control 120
Parameters for Sequence 120

[Connection and Setup of Velocity Control Mode]

page

Control Block Diagram of Velocity Control Mode 126

Wiring to the Connector, CN X5 127

Wiring Example to the Connector, CN X5 127
Interface Circuit 128
Input Signal and Pin No. of the Connector, CN X5 130
Output Signal and Pin No. of the Connector, CN X5 135

Trial Run (JOG Run) at Velocity Control Mode 138

Inspection Before Trial Run 138
Trial Run by Connecting the Connector, CN X5 139

Real-Time Auto-Gain Tuning 140

Outline 140
Applicable Range 140
How to Operate 140
Adaptive Filter 141
Parameters Which are Automatically Set up 141

Parameter Setup 142
Parameters for Functional Selection 142
Parameters for Adjustment of Time Constant of Gains and Filters 146
Parameters for Auto-Gain Tuning 147
Parameters for Adjustment (2nd Gain Switching Function) 149
Parameters for Position Control 151
Parameters for Velocity/Torque Control 152
Parameters for Sequence 155

[Connection and Setup of Torque Control Mode] page

Control Block Diagram of Torque Control Mode 160
Wiring to the Connector, CN X5 161
Wiring Example to the Connector, CN X5 161
Interface Circuit 162
Input Signal and Pin No. of the Connector, CN X5 164
Output Signal and Pin No. of the Connector, CN X5 168
Trial Run (JOG Run) at Torque Control Mode 171
Inspection Before Trial Run 171
Trial Run by Connecting the Connector, CN X5 171
Real-Time Auto-Gain Tuning 172
Outline 172
Applicable Range 172
How to Operate 172
Parameters Which are Automatically Set up 173
Parameter Setup 174
Parameters for Functional Selection 174
Parameters for Adjustment of Time Constant of Gains and Filters 177
Parameters for Auto-Gain Tuning 178
Parameters for Adjustment (2nd Gain Switching Function) 179
Parameters for Position Control 181
Parameters for Velocity/Torque Control 183
Parameters for Sequence 185

[Full-Closed Control Mode] page

Outline of Full-Closed Control 190
What is Full-Closed Control ? 190
Control Block Diagram of Full-Closed Control Mode 191
Wiring to the Connector, CN X5 192
Wiring Example to the Connector, CN X5 192
Interface Circuit 193

Input Signal and Pin No. of the Connector, CN X5 195
Output Signal and Pin No. of the Connector, CN X5 201
Connection to the Connector, CN X7 204
Connector, CN X7 204
Wiring to the External Scale, Connector, CN X7 205
Real-Time Auto-Gain Tuning 206
Outline 206
Applicable Range 206

How to Operate 206
Adaptive Filter 207
Parameters Which are Automatically Set up 207

Parameter Setup 208

Parameters for Functional Selection 208
Parameters for Adjustment of Time Constant of Gains and Filters 211
Parameters for Auto-Gain Tuning 212
Parameters for Adjustment (2nd Gain Switching Function) 214
Parameters for Position Control 216
Parameters for Velocity/Torque Control 220
Parameters for Sequence 220
Parameters for Full-Closed 224

[Adjustment]

page

Gain Adjustment 226

Real-Time Auto-Gain Tuning 228

Fit-Gain Function 231

Adaptive Filter 234

Normal Auto-Gain Tuning 236

Release of Automatic Gain Adjusting Function 239

Manual Auto-Gain Tuning (Basic) 240

Adjustment in Position Control Mode 241
Adjustment in Velocity Control Mode 241
Adjustment in Torque Control Mode 242
Adjustment in Full-Closed Control Mode 242
Gain Switching Function 243
Suppression of Machine Resonance 246
Automatic Gain Setup Function 248

Manual Auto-Gain Tuning (Application) 249

Instantaneous Speed Observer 249
Damping Control 250

[When in Trouble]

page

When in Trouble 252

What to Check ? 252
Protective Function (What is Error Code ?) 252
Protective Function (Details of Error Code) 253

Troubleshooting 260

Motor Does Not Run 260
Unstable Rotation (Not Smooth)/Motor Runs Slowly Even with Speed Zero at Velocity Control Mode 261
Positioning Accuracy Is Poor 262
Origin Point Slips 263
Abnormal Noise or Vibration 263
Overshoot/Undershoot, Overheating of the Motor (Motor Burn-Out) 264
Motor Speed Does Not Reach to the Setup/Motor Revolution (Travel) Is Too Large or Small 264
Parameter Returns to Previous Setup 264
Display of "Communication port or driver cannot be detected" Appears on the Screen While using the PANATERM® 264

[Supplement]

page

Absolute System 266
Outline of the Setup Support Software, PANATERM® 276
Communication 278
Division Ratio for Parameters 306
Conformity to EC Directives and UL Standards 308
Options 312
Recommended components 323
Dimensions (Driver) 324
Dimensions (Motor) 327
Permissible Load at Output Shaft 342
Motor Characteristics (S-T Characteristics) 343
Motor with Gear Reducer 349
Dimensions (Motor with Gear Reducer) 350
Permissible Load at Output Shaft (Motor with Gear Reducer) 352
Motor Characteristics (S-T Characteristics)/Motor with Gear Reducer 353
Block Diagram of Driver 354
Block Diagram of Driver by Control Mode 356
Specifications (Driver) 358
Homing with "Hit & Stop" and "Press & Hold" Control 360

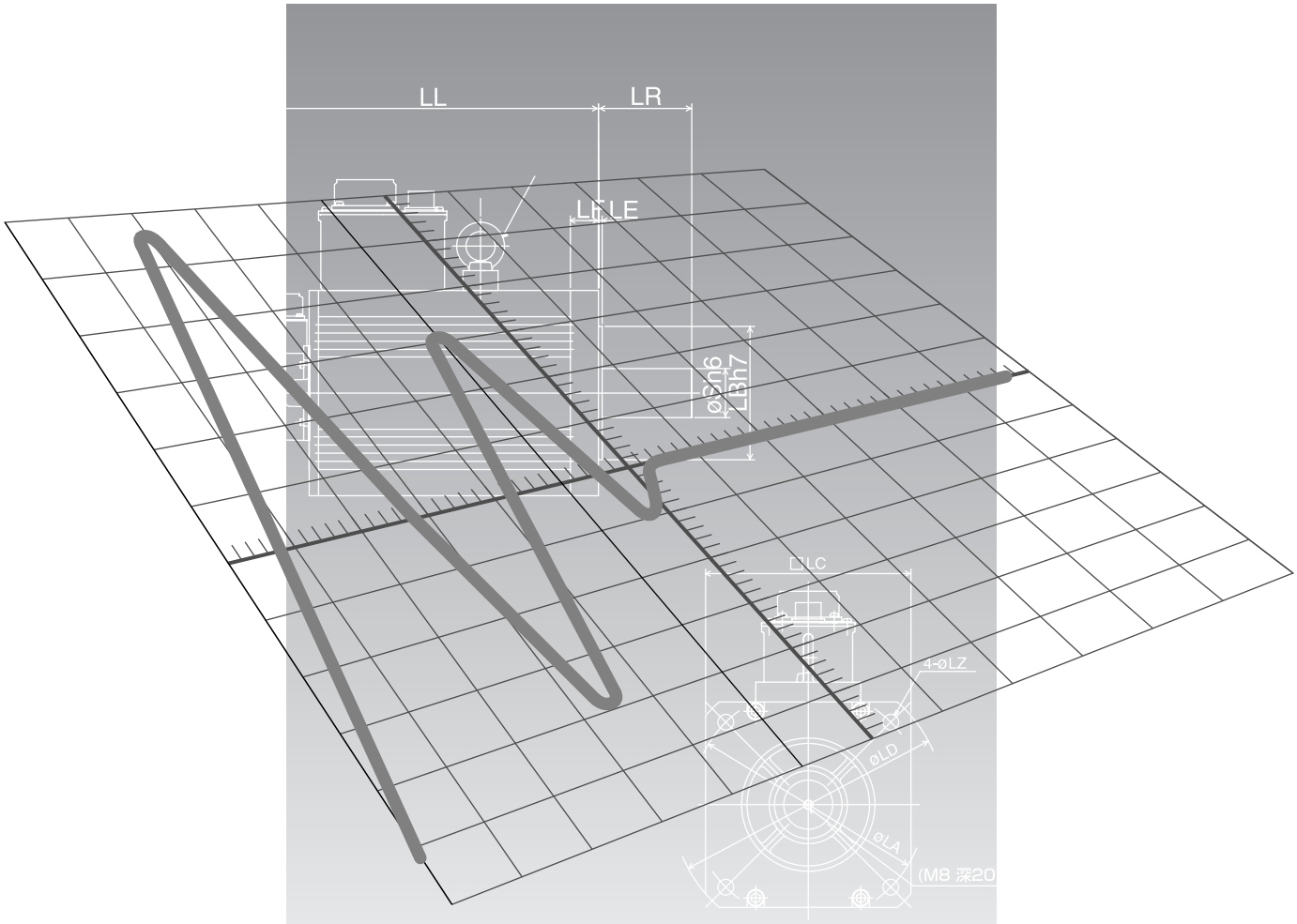

[Before Using the Products]

page

Safety Precautions 8

Maintenance and Inspection 12

Introduction 14

Outline 14
On Opening the Package 14
Check of the Driver Model 14
Check of the Motor Model 15
Check of the Combination of the Driver and the Motor 16

Parts Description 18

Driver 18
Motor 20
Console 21

Installation 22

Driver 22
Motor 24
Console 26

Safety Precautions Observe the Following Instructions Without Fail

Observe the following precautions in order to avoid damages on the machinery and injuries to the operators and other personnel during the operation.

- **In this document, the following symbols are used to indicate the level of damages or injuries which might be incurred by the misoperation ignoring the precautions.**

DANGER	Indicates a potentially hazardous situation which, if not avoided, will result in death or serious injury.
CAUTION	Indicates a potentially hazardous situation which, if not avoided, will result in minor injury or property damage.

- **The following symbols represent "MUST NOT" or "MUST" operations which you have to observe. (Note that there are other symbols as well.)**

	Represents "MUST NOT" operation which is inhibited.
	Represents "MUST" operation which has to be executed.

DANGER

Do not subject the Product to water, corrosive or flammable gases, and combustibles.

Failure to observe this instruction could result in fire.

Do not subject the cables to excessive force, heavy object, or pinching force, nor damage the cables.

Failure to observe this instruction could result in electrical shocks, damages and breakdowns.

Do not put your hands in the servo driver.

Failure to observe this instruction could result in burn and electrical shocks.

Do not touch the rotating portion of the motor while it is running.

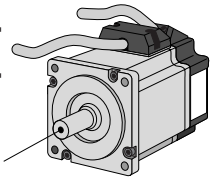

Failure to observe this instruction could result in injuries.

Do not drive the motor with external power.

Failure to observe this instruction could result in fire.

Do not touch the motor, servo driver and external regenerative resistor of the driver, since they become very hot.

Failure to observe this instruction could result in burns.

⚠ DANGER

Do not place combustibles near by the motor, driver and regenerative resistor.

Failure to observe this instruction could result in fire.

Do not place the console close to a heating unit such as a heater or a large wire wound resistor.

Failure to observe this instruction could result in fire and breakdowns.

Ground the earth terminal of the motor and driver without fail.

Failure to observe this instruction could result in electrical shocks.

Install an over-current protection, earth leakage breaker, over-temperature protection and emergency stop apparatus without fail.

Failure to observe this instruction could result in electrical shocks, injuries and fire.

Install an emergency stop circuit externally so that you can stop the operation and shut off the power immediately.

Failure to observe this instruction could result in injuries, electrical shocks, fire, breakdowns and damages.

Turn off the power and wait for a longer time than the specified time, before transporting, wiring and inspecting the driver.

Failure to observe this instruction could result in electrical shocks.

Install and mount the Product and machinery securely to prevent any possible fire or accidents incurred by earthquake.

Failure to observe this instruction could result in electrical shocks, injuries and fire.

Turn off the power and make it sure that there is no risk of electrical shocks before transporting, wiring and inspecting the motor.

Failure to observe this instruction could result in electrical shocks.

Check and confirm the safety of the operation after the earthquake.

Failure to observe this instruction could result in electrical shocks, injuries and fire.

Wiring has to be carried out by the qualified and authorized specialist.

Failure to observe this instruction could result in electrical shocks.

Mount the motor, driver and regenerative resistor on incombustible material such as metal.

Failure to observe this instruction could result in fire.

Make the correct phase sequence of the motor and correct wiring of the encoder.

Failure to observe this instruction could result in injuries breakdowns and damages.

Safety Precautions Observe the Following Instructions Without Fail

⚠ CAUTION

Do not hold the motor cable or motor shaft during the transportation.

Failure to observe this instruction could result in injuries.

Do not block the heat dissipating holes or put the foreign particles into them.

Failure to observe this instruction could result in electrical shocks and fire.

Never run or stop the motor with the electro-magnetic contactor installed in the main power side.

Failure to observe this instruction could result in breakdowns.

Do not step on the Product nor place the heavy object on them.

Failure to observe this instruction could result in electrical shocks, injuries, breakdowns and damages.

Do not give strong impact shock to the motor shaft.

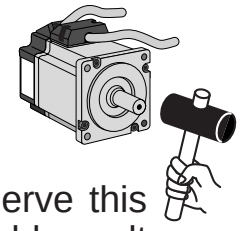

Failure to observe this instruction could result in breakdowns.

Do not turn on and off the main power of the driver repeatedly.

Failure to observe this instruction could result in breakdowns.

Do not approach to the machine since it may suddenly restart after the power resumption.
Design the machine to secure the safety for the operator even at a sudden restart.

Failure to observe this instruction could result in injuries.

Do not make an extreme gain adjustment or change of the drive.
Do not keep the machine running/operating unstably.

Failure to observe this instruction could result in injuries.

Do not use the built-in brake as a "Braking" to stop the moving load.

Failure to observe this instruction could result in injuries and breakdowns.

Do not give strong impact shock to the Product.

Failure to observe this instruction could result in breakdowns.

Do not modify, disassemble nor repair the Product.

Failure to observe this instruction could result in fire, electrical shocks and injuries.

Do not pull the cables with excessive force.

Failure to observe this instruction could result in breakdowns.

⚠ CAUTION

Use the motor and the driver in the specified combination.

Failure to observe this instruction could result in fire.

Make a wiring correctly and securely.

Failure to observe this instruction could result in fire and electrical shocks.

Use the eye bolt of the motor for transportation of the motor only, and never use this for transportation of the machine.

Failure to observe this instruction could result in injuries and breakdowns.

Observe the specified mounting method and direction.

Failure to observe this instruction could result in breakdowns.

Make an appropriate mounting of the Product matching to its weight and output rating.

Failure to observe this instruction could result in injuries and breakdowns.

Observe the specified voltage.

Failure to observe this instruction could result in electrical shocks, injuries and fire.

Keep the ambient temperature below the permissible temperature for the motor and driver.

Failure to observe this instruction could result in breakdowns.

Execute the trial run without connecting the motor to the machine system and fix the motor. After checking the operation, connect to the machine system again.

Failure to observe this instruction could result in injuries.

Connect the brake control relay to the relay which is to shut off at emergency stop in series.

Failure to observe this instruction could result in injuries and breakdowns.

When any error occurs, remove the cause and release the error after securing the safety, then restart.

Failure to observe this instruction could result in injuries.

When you dispose the batteries, observe any applicable regulations or laws after insulating them with tape.

This Product shall be treated as Industrial Waste when you dispose.

Maintenance and Inspection

• Routine maintenance and inspection of the driver and motor are essential for the proper and safe operation.

Notes on Maintenance and Inspection

1) Turn on and turn off should be done by operators or inspectors themselves.
2) Internal circuit of the driver is kept charged with high voltage for a while even after power-off. Turn off the power and allow 15 minutes or longer after LED display of the front panel has gone off, before performing maintenance and inspection.
3) Disconnect all of the connection to the driver when performing megger test (Insulation resistance measurement) to the driver, otherwise it could result in breakdown of the driver.

Inspection Items and Cycles

General and normal running condition

Ambient conditions : 30˚C (annual average), load factor of 80% or lower, operating hours of 20 hours or less per day.

Perform the daily and periodical inspection as per the items below.

Type	Cycles	Items to be inspected
Daily inspection	Daily	• Ambient temperature, humidity, speck, dust or foreign object • Abnormal vibration and noise • Main circuit voltage • Odor • Lint or other particles at air holes • Cleanness at front portion of the driver and connecter • Damage of the cables • Loose connection or misalignment between the motor and machine or equipment • Pinching of foreign object at the load
Periodical inspection	Annual	• Loose tightening • Trace of overheat • Damage of the terminals

<Note> Inspection cycle may change when the running conditions of the above change.

Guideline for Parts Replacement

Use the table below for a reference. Parts replacement cycle varies depending on the actual operating conditions. Defective parts should be replaced or repaired when any error have occurred.

Prohibited	**Disassembling for inspection and repair should be carried out only by authorized dealers or service company.**

Product	Component	Standard replacement cycles (hour)	Note
Driver	Smoothing capacitor	Approx. 5 years	These hours or cycles are reference. When you experience any error, replacement is required even before this standard replacement cycle.
	Cooling fan	2 to 3 years (10,000 to 30,000 hours)	
	Aluminum electrolytic capacitor (on PCB)	Approx. 5 years	
	Rush current preventive relay	Approx. 100,000 times (depending on working condition)	
	Rush current preventive resistor	Approx. 20,000 times (depending on working condition)	
Motor	Bearing	3 to 5 years (20,000 to 30,000 hours)	
	Oil seal	5000 hours	
	Encoder	3 to 5 years (20,000 to 30,000 hours)	
	Battery for absolute encoder	Life time varies depending on working conditions. Refer to the instruction manual attached to the battery for absolute encoder.	
Motor with gear reducer	Gear reducer	10,000 hours	

Introduction

Outline

MINAS-A4 Series with wide output range from 50W to 5kW, are the high speed, high functionality AC servo drivers and motors. Thanks to the adoption of a new powerful CPU, A4 Series now realize velocity response frequency of 1kHz, and contribute to the development of a high-speed machine and drastic shortening of tact-time.
Standard line-up includes full-closed control and auto-gain tuning function and the motors with 2500P/r incremental encoder and 17-bit absolute/incremental encoder.
A4 Series have also improved the user-friendliness by offering a console (option) which enables you to monitor the rotational speed display, set up parameters, trial run (JOG running) and copy parameters.
A4 Series can support various applications and their requirement by featuring automated gain tuning function, damping control which achieves a stable "Stop Performance" even in low-stiffness machine and high speed motor.
This document is designed for the customer to exploit the versatile functions of A4 Series to full extent.

Cautions

1) Any part or whole of this document shall not be reproduced without written permission from us.
2) Contents of this document are subject to change without notice.

On Opening the Product Package

- Make sure that the model is what you have ordered.
- Check if the product is damaged or not during transportation.
- Check if the instruction manual is attached or not.
- Check if the power connector and motor connecters (CN X1 and CN X2 connectors) are attached or not (A to D-frame).

Contact to a dealer if you find any failures.

Check of the Driver Model

Contents of Name Plate

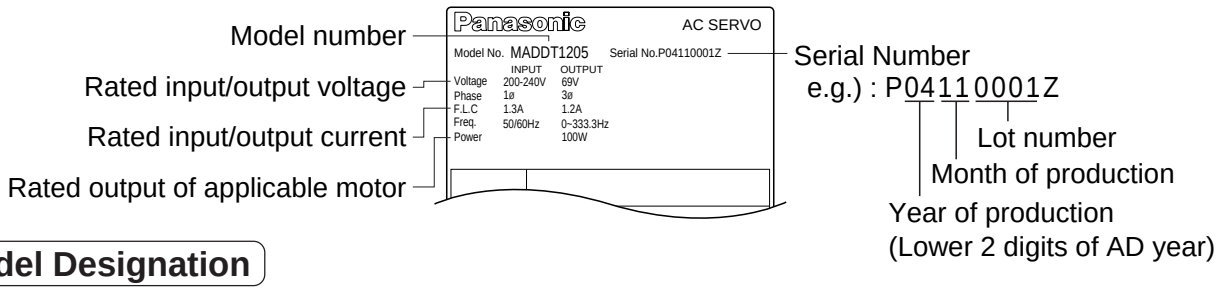

Model Designation

M A D D T 1 2 0 5 ＊＊＊

1 to 4 | 5 to 6 | 7 | 8 to 9 | 10 to 12

Special specifications (letters and numbers)

Current detector rating

Frame-size symbol

Symbol	Frame
MADD	A4-series, A-frame
MBDD	A4-series, B-frame
MCDD	A4-series, C-frame
MDDD	A4-series, D-frame
MEDD	A4-series, E-frame
MFDD	A4-series, F-frame

Max. current rating of power device

Symbol	Current rating
T1	10A
T2	15A
T3	30A
T5	50A
T7	70A
TA	100A
TB	150A

Power supply

Symbol	Specifications
1	Single phase, 100V
2	Single phase, 200V
3	3-phase, 200V
5	Single/3-phase, 200V

Symbol	Current rating
05	5A
07	7.5A
10	10A
15	15A
20	20A
30	30A
40	40A
64	64A
90	90A
A2	120A

Check of the Motor Model

Contents of Name Plate

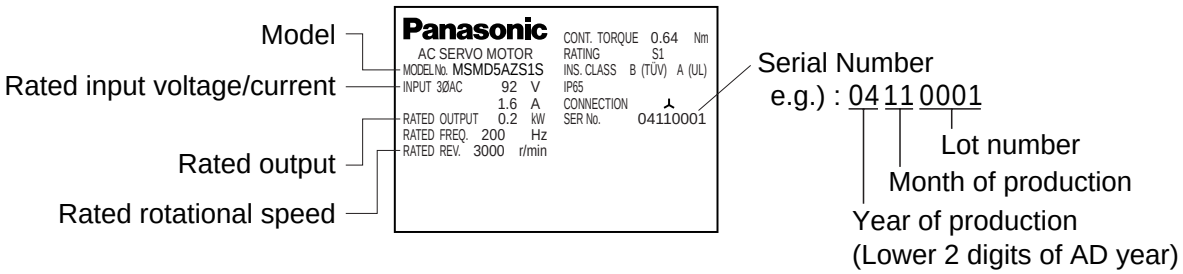

Model Designation

M S M D 5 A Z S 1 S ∗∗

1 to 4 | 5 to 6 | 7 | 8 | 9 | 10 | 11 to 12

Special specifications (letters and numbers)

Motor structure

Design order
1: Standard

Voltage specifications

Symbol	Specifications
1	100 V
2	200 V
Z	100/200 common (50W only)

Motor rated output

Symbol	Output	Symbol	Output
5A	50W	15	1.5kW
01	100W	20	2.0kW
02	200W	25	2.5kW
04	400W	30	3.0kW
05	500W	40	4.0kW
08	750W	45	4.5kW
09	900W	50	5.0kW
10	1.0kW		

Symbol	Type
MAMA	Ultra low inertia (100W to 750W)
MQMA	Low inertia (100W to 400W)
MSMD	Low inertia (50W to 750W)
MSMA	Low inertia (1.0kW to 5.0kW)
MDMA	Middle inertia (1.0kW to 5.0kW)
MHMA	High inertia (500W to 5.0kW)
MFMA	Middle inertia (400W to 4.5kW)
MGMA	Middle inertia (900W to 4.5kW)

Rotary encoder specifications

Symbol	Specifications			
	Format	Pulse count	Resolution	Wire count
P	Incremental	2500P/r	10,000	5-wire
S	Absolute/Incremental common	17bit	131,072	7-wire

Motor structure

MSMD, MQMA

Symbol	Shaft		Holding brake		Oil seal	
	Round	Key way	Without	With	Without	With*1
A	●		●		●	
B	●			●	●	
S		●*2	●		●	
T		●*2		●	●	

*1 The product with oil seal is a special order product.
*2 Key way with center tap.

Products are standard stock items or build to order items. For details, inquire of the dealer.

MAMA

Symbol	Shaft		Holding brake		Oil seal	
	Round	Key way	Without	With	Without	With
A	●		●		●	
B	●			●	●	
E		●	●		●	
F		●		●	●	

MSMA, MDMA, MFMA, MGMA, MHMA

Symbol	Shaft		Holding brake		Oil seal	
	Round	Key way	Without	With	Without	With
C	●		●			●
D	●			●		●
G		●	●			●
H		●		●		●

Introduction

Check of the Combination of the Driver and the Motor

This drive is designed to be used in a combination with the motor which are specified by us.
Check the series name of the motor, rated output torque, voltage specifications and encoder specifications.

Incremental Specifications, 2500P/r

<Remarks> Do not use in other combinations than those listed below.

Power supply	Applicable motor				Applicable driver	
	Motor series	Rated rotational speed	Model	Rated output	Model	Frame
Single phase, 200V	MAMA Ultra low inertia	5000r/min	MAMA012P1*	100W	MADDT1207	A-frame
			MAMA022P1*	200W	MBDDT2210	B-frame
3-phase, 200V			MAMA042P1*	400W	MCDDT3520	C-frame
			MAMA082P1*	750W	MDDDT5540	D-frame
Single phase, 100V	MAMA Low inertia	3000r/min	MQMA011P1*	100W	MADDT1107	A-frame
			MQMA021P1*	200W	MBDDT2110	B-frame
			MQMA041P1*	400W	MCDDT3120	C-frame
Single phase, 200V			MQMA012P1*	100W	MADDT1205	A-frame
			MQMA022P1*	200W	MADDT1207	A-frame
			MQMA042P1*	400W	MBDDT2210	B-frame
Single phase, 100V	MSMD Low inertia	3000r/min	MSMD5AZP1*	50W	MADDT1105	A-frame
			MSMD011P1*	100W	MADDT1107	
			MSMD021P1*	200W	MBDDT2110	B-frame
			MSMD041P1*	400W	MCDDT3120	C-frame
Single phase, 200V			MSMD5AZP1*	50W	MADDT1205	A-frame
			MSMD012P1*	100W		
			MSMD022P1*	200W	MADDT1207	
			MSMD042P1*	400W	MBDDT2210	B-frame
Single/3-phase, 200V			MSMD082P1*	750W	MCDDT3520	C-frame
	MSMA Low inertia	3000r/min	MSMA102P1*	1.0kW	MDDDT5540	D-frame
			MSMA152P1*	1.5kW		
3-phase, 200V			MSMA202P1*	2.0kW	MEDDT7364	E-frame
			MSMA302P1*	3.0kW	MFDDTA390	F-frame
			MSMA402P1*	4.0kW	MFDDTB3A2	
			MSMA502P1*	5.0kW		
Single/3-phase, 200V	MDMA Middle inertia	2000r/min	MDMA102P1*	1.0kW	MDDDT3530	D-frame
			MDMA152P1*	1.5kW	MDDDT5540	
3-phase, 200V			MDMA202P1*	2.0kW	MEDDT7364	E-frame
			MDMA302P1*	3.0kW	MFDDTA390	F-frame
			MDMA402P1*	4.0kW	MFDDTB3A2	
			MDMA502P1*	5.0kW		
Single/3-phase, 200V	MHMA High inertia	2000r/min	MHMA052P1*	500W	MCDDT3520	C-frame
			MHMA102P1*	1.0kW	MDDDT3530	D-frame
			MHMA152P1*	1.5kW	MDDDT5540	
3-phase, 200V			MHMA202P1*	2.0kW	MEDDT7364	E-frame
			MHMA302P1*	3.0kW	MFDDTA390	F-frame
			MHMA402P1*	4.0kW	MFDDTB3A2	
			MHMA502P1*	5.0kW		
Single/3-phase, 200V	MFMA Middle inertia	2000r/min	MFMA042P1*	400W	MCDDT3520	C-frame
			MFMA152P1*	1.5kW	MDDDT5540	D-frame
3-phase, 200V			MFMA252P1*	2.5kW	MEDDT7364	E-frame
			MFMA452P1*	4.5kW	MFDDTB3A2	F-frame
Single/3-phase, 200V	MGMA Middle inertia	1000r/min	MGMA092P1*	900W	MDDDT5540	D-frame
3-phase, 200V			MGMA202P1*	2.0kW	MFDDTA390	F-frame
			MGMA302P1*	3.0kW	MFDDTB3A2	
			MGMA452P1*	4.5kW		

<Note>
Suffix of " * " in the applicable motor model represents the motor structure.

Absolute/Incremental Specifications, 17-bit

<Remarks> Do not use in other combinations than those listed below.

Power supply	Applicable motor				Applicable driver	
	Motor series	Rated rotational speed	Model	Rated output	Model	Frame
Single phase, 200V	MAMA Ultra low inertia	5000r/min	MAMA012S1*	100W	MADDT1207	A-frame
			MAMA022S1*	200W	MBDDT2210	B-frame
3-phase, 200V			MAMA042S1*	400W	MCDDT3520	C-frame
			MAMA082S1*	750W	MDDDT5540	D-frame
Single phase, 100V	MAMA Low inertia	3000r/min	MQMA011S1*	100W	MADDT1107	A-frame
			MQMA021S1*	200W	MBDDT2110	B-frame
			MQMA041S1*	400W	MCDDT3120	C-frame
Single phase, 200V			MQMA012S1*	100W	MADDT1205	A-frame
			MQMA022S1*	200W	MADDT1207	A-frame
			MQMA042S1*	400W	MBDDT2210	B-frame
Single phase, 100V	MSMD Low inertia	3000r/min	MSMD5AZS1*	50W	MADDT1105	A-frame
			MSMD011S1*	100W	MADDT1107	
			MSMD021S1*	200W	MBDDT2110	B-frame
			MSMD041S1*	400W	MCDDT3120	C-frame
Single phase, 200V			MSMD5AZS1*	50W	MADDT1205	A-frame
			MSMD012S1*	100W		
			MSMD022S1*	200W	MADDT1207	
			MSMD042S1*	400W	MBDDT2210	B-frame
Single/3-phase, 200V			MSMD082S1*	750W	MCDDT3520	C-frame
	MSMA Low inertia	3000r/min	MSMA102S1*	1.0kW	MDDDT5540	D-frame
			MSMA152S1*	1.5kW		
3-phase, 200V			MSMA202S1*	2.0kW	MEDDT7364	E-frame
			MSMA302S1*	3.0kW	MFDDTA390	F-frame
			MSMA402S1*	4.0kW	MFDDTB3A2	
			MSMA502S1*	5.0kW		
Single/3-phase, 200V	MDMA Middle inertia	2000r/min	MDMA102S1*	1.0kW	MDDDT3530	D-frame
			MDMA152S1*	1.5kW	MDDDT5540	
3-phase, 200V			MDMA202S1*	2.0kW	MEDDT7364	E-frame
			MDMA302S1*	3.0kW	MFDDTA390	F-frame
			MDMA402S1*	4.0kW	MFDDTB3A2	
			MDMA502S1*	5.0kW		
Single/3-phase, 200V	MHMA High inertia	2000r/min	MHMA052S1*	500W	MCDDT3520	C-frame
			MHMA102S1*	1.0kW	MDDDT3530	D-frame
			MHMA152S1*	1.5kW	MDDDT5540	
3-phase, 200V			MHMA202S1*	2.0kW	MEDDT7364	E-frame
			MHMA302S1*	3.0kW	MFDDTA390	F-frame
			MHMA402S1*	4.0kW	MFDDTB3A2	
			MHMA502S1*	5.0kW		
Single/3-phase, 200V	MFMA Middle inertia	2000r/min	MFMA042S1*	400W	MCDDT3520	C-frame
			MFMA152S1*	1.5kW	MDDDT5540	D-frame
3-phase, 200V			MFMA252S1*	2.5kW	MEDDT7364	E-frame
			MFMA452S1*	4.5kW	MFDDTB3A2	F-frame
Single/3-phase, 200V	MGMA Middle inertia	1000r/min	MGMA092S1*	900W	MDDDT5540	D-frame
3-phase, 200V			MGMA202S1*	2.0kW	MFDDTA390	F-frame
			MGMA302S1*	3.0kW	MFDDTB3A2	
			MGMA452S1*	4.5kW		

<Notes>

1) Suffix of " * " in the applicable motor model represents the motor structure.
2) Default of the driver is set for the incremental encoder specifications.
   When you use in absolute, make the following operations.
   a) Install a battery for absolute encoder. (refer to P.314, "Options" of Supplement.)
   b) Switch the parameter Pr0B (Absolute encoder setup) from "1 (default)" to "0".
3) No wiring for back up battery is required when you use the absolute 17-bit encoder in incremental.

Parts Description

Driver

• A and B-frame

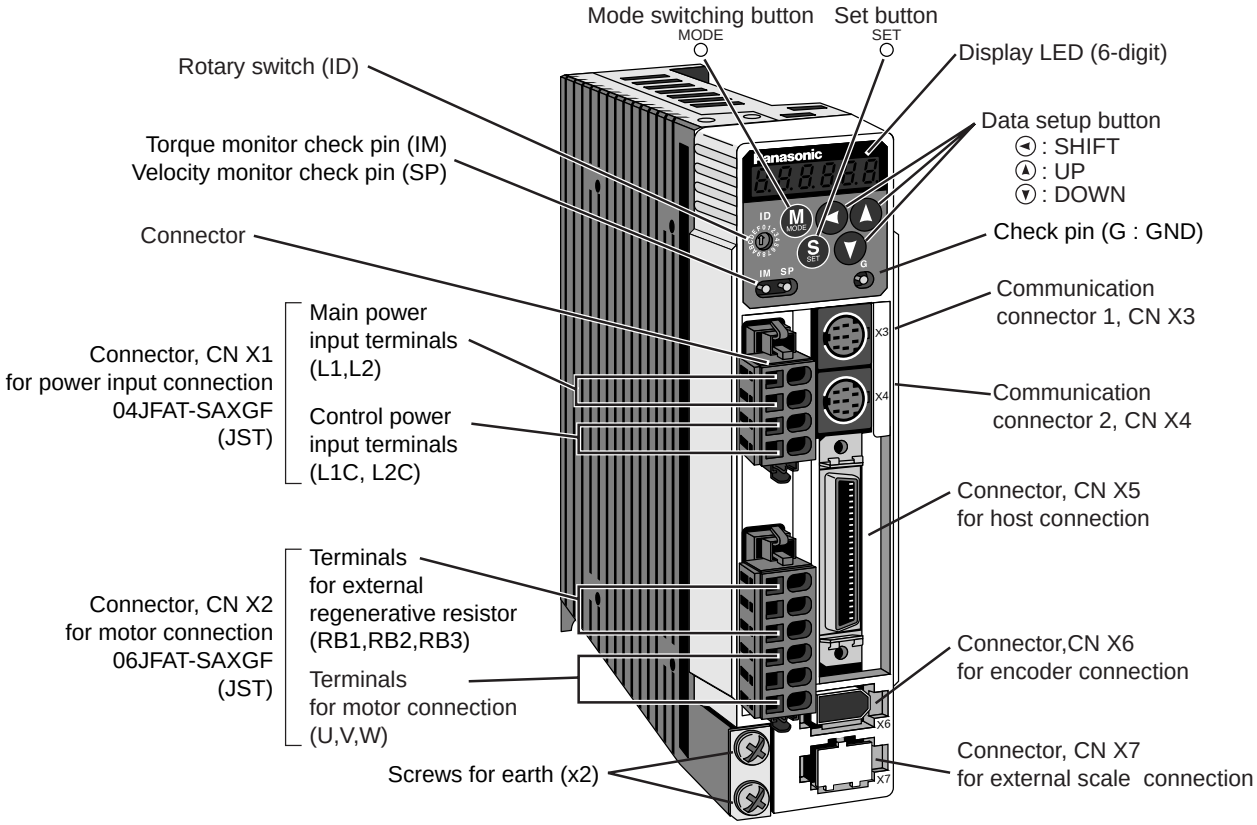

e.g.) : MADDT1207 (Single phase, 200V, 200W : A-frame)

• C and D-frame

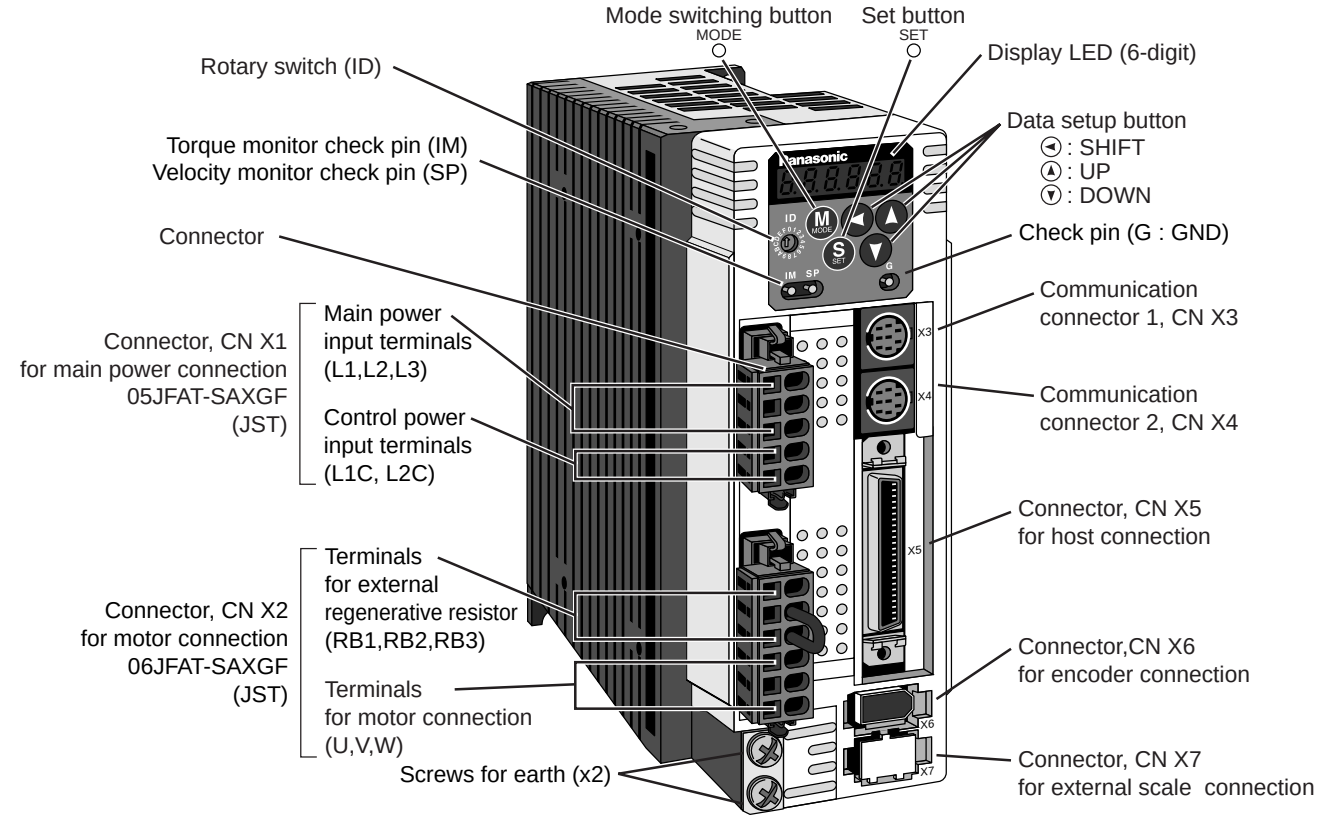

e.g.) : MCDDT1207 (Single/3-phase, 200V, 750W : C-frame)

<Note>

X1 and X2 are attached in A to D-frame driver.

• E and F-frame

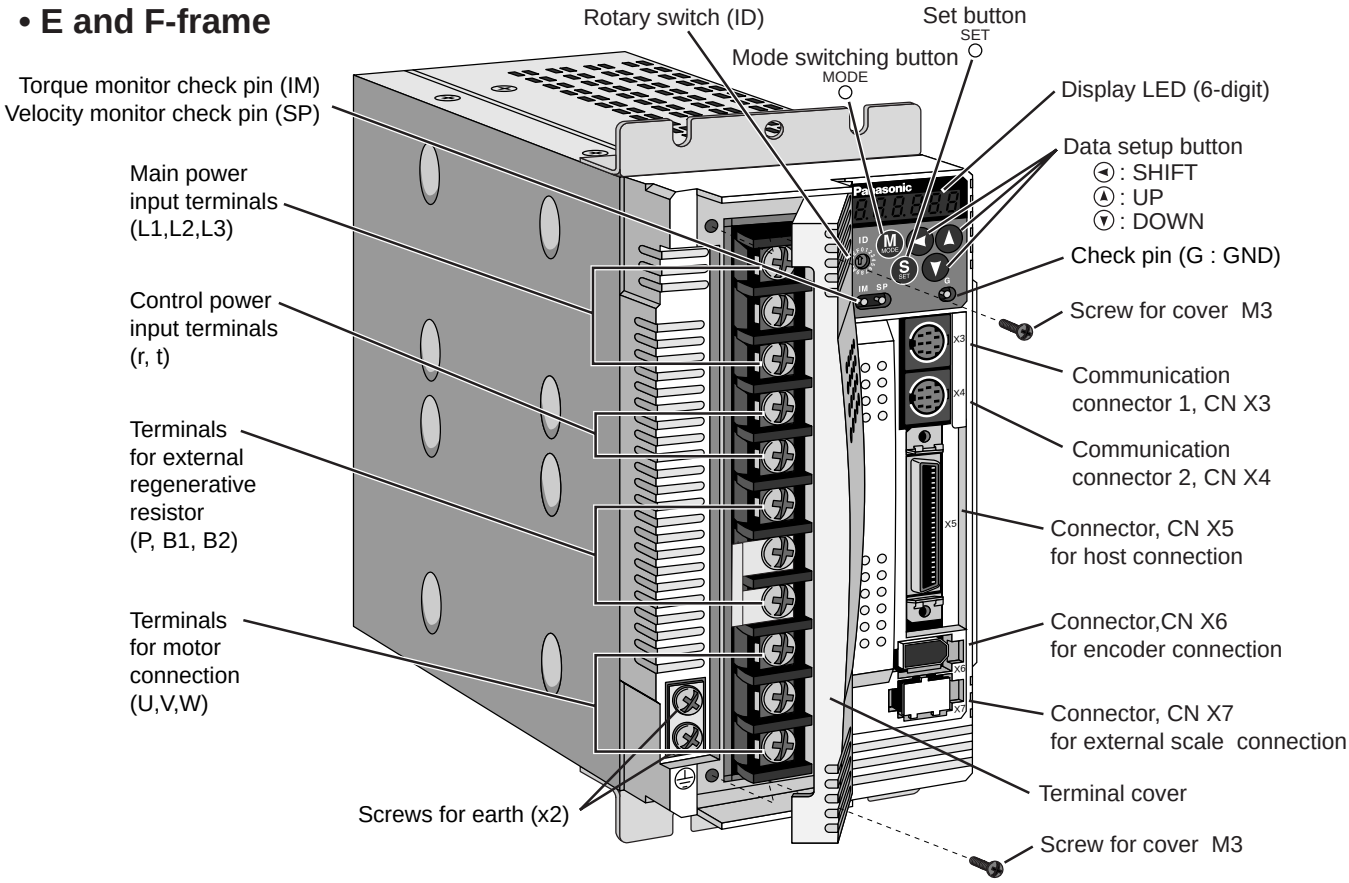

e.g.) : MEDDT7364 (3-phase, 200V, 2.0kW : E-frame)

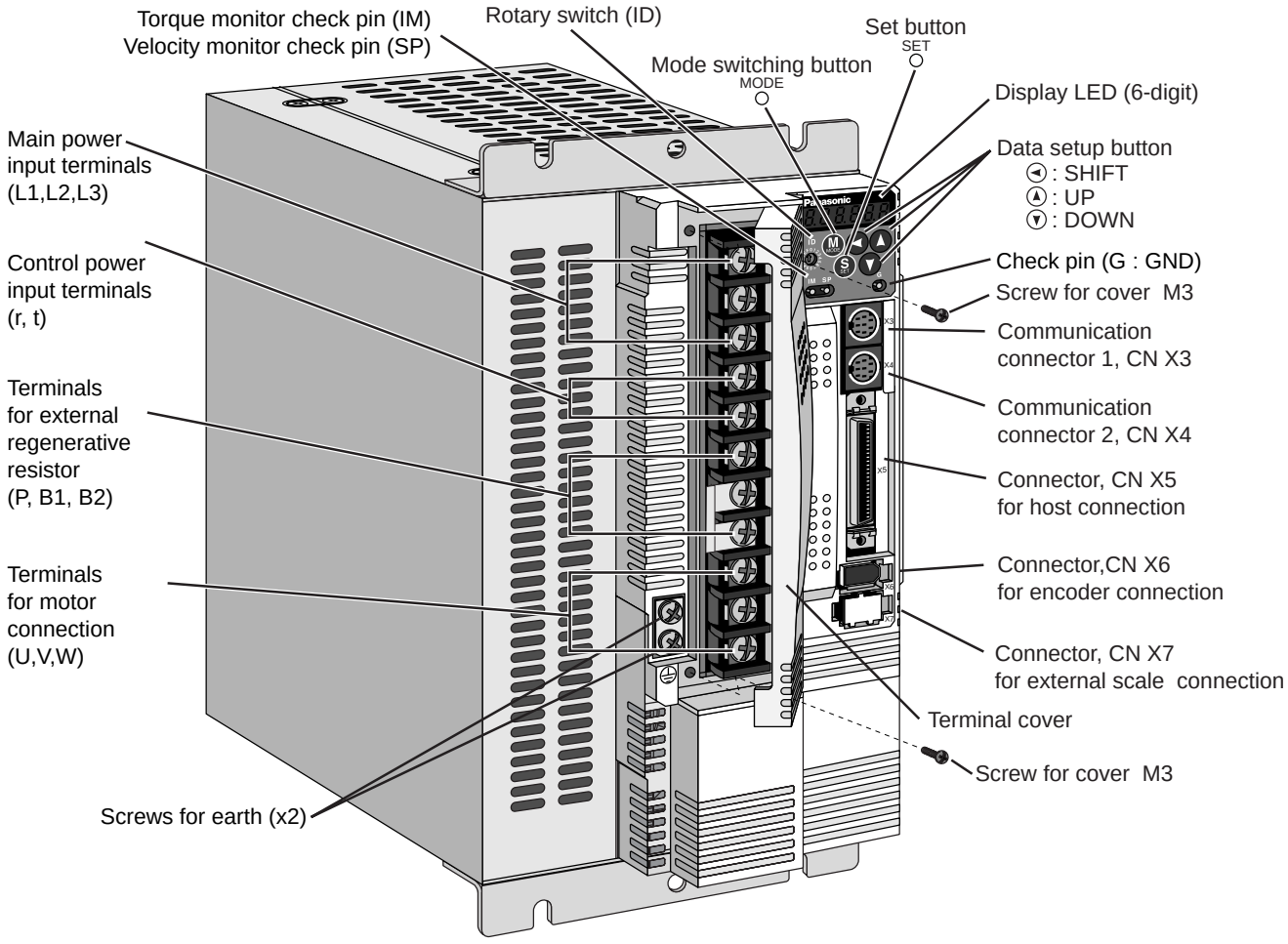

e.g.) : MFDDTB3A2 (3-phase, 200V, 5.0kW : F-frame)

<Note>

For details of each model, refer to "Dimensions " (P.324 to 326) of Supplement.

Parts Description

Motor

- MSMD 50W to 750W
- MAMA 100W to 750W
- MQMA 100W to 400W

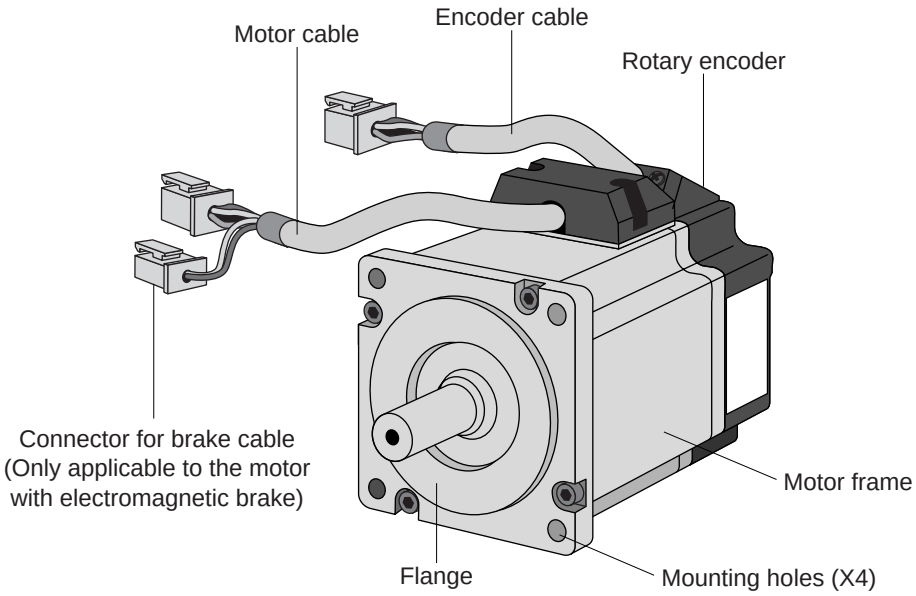

e.g.) : Low inertia type (MSMD series, 50W)

- MSMA 1.0kW to 5.0kW
- MDMA 1.0kW to 5.0kW
- MHMA 500W to 5.0kW
- MFMA 400W to 4.5kW
- MGMA 900W to 4.5kW

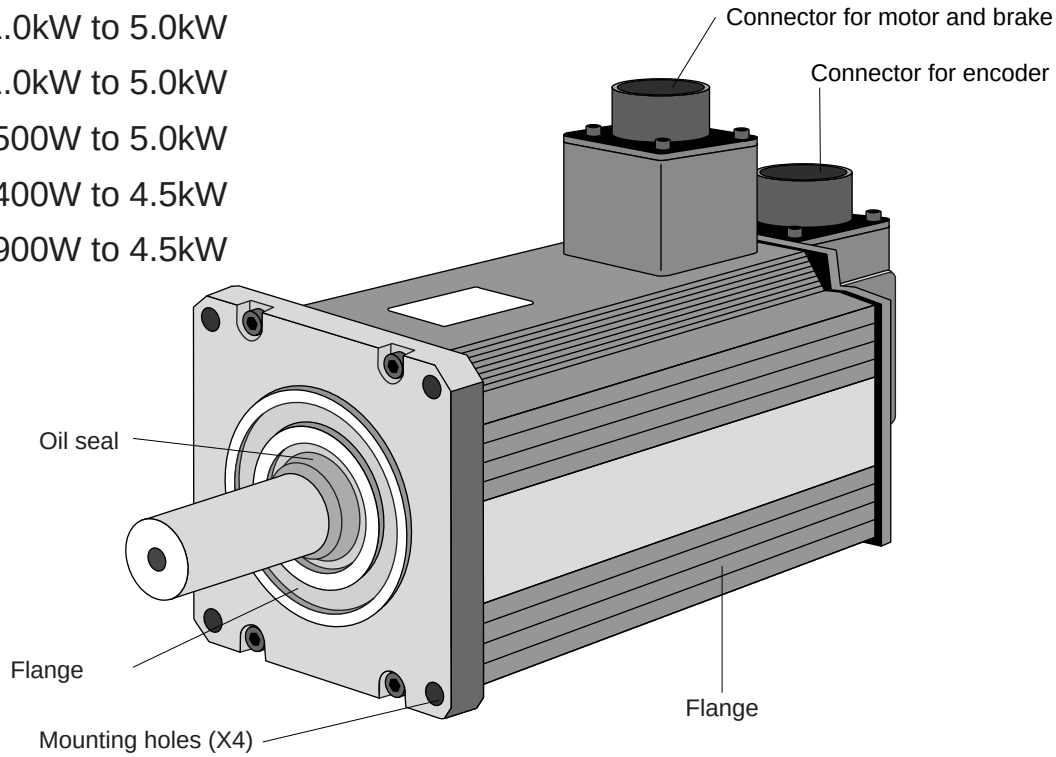

e.g.) : Middle inertia type (MDMA series, 1.0kW)

<Note>
For details of each model, refer to "Dimensions " (P.327 to P.341) of Supplement.

Console

Main Body

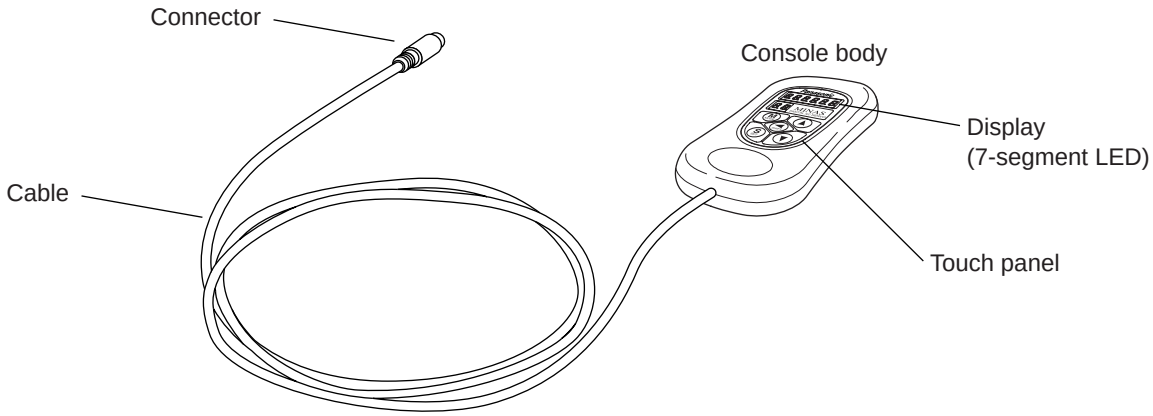

<Note>
Console is an option (Part No.: DV0P4420).

Display/Touch panel

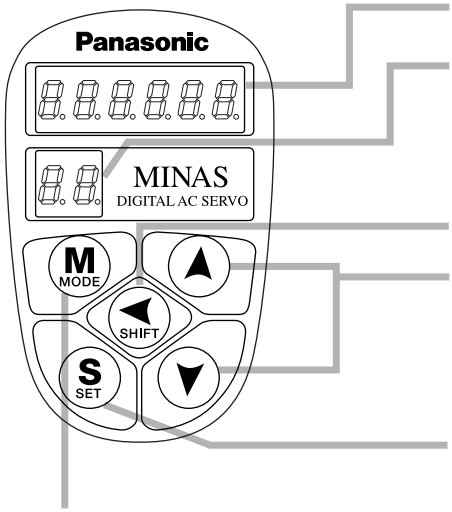

Display LED (6 digits)

Displays **ID number of selected driver** (in 2 digits).
The value set in Pr00 (Address) is ID No.
Displays the parameter No. at parameter setup mode.

Press this to shift the digit for data change.

Press this to change the data and to execute the operation of the selected parameter.
Numerical value increases by pressing ▲, and decreases by pressing ▼.

SET Button : Shifts to "EXECUTE" display of each mode selected by mode switching button.

Mode switching button : Switches the mode among the following 6 modes.

(1) Monitor mode
(2) Parameter setup mode
(3) EEPROM write mode
(4) Normal auto-gain tuning mode
(5) AUX function mode
- Trial run (JOG mode)
- Alarm clear

(6) Copy mode
- Parameter copy from the servo driver to the console
- Parameter copy from the console to the servo driver

How to Install

Install the driver and the motor properly to avoid a breakdown or an accident.

Driver

Installation Place

1) Indoors, where the products are not subjected to rain or direct sun beams. The products are not water-proof.
2) Where the products are not subjected to corrosive atmospheres such as hydrogen sulfide, sulfurous acid, chlorine, ammonia, chloric gas, sulfuric gas, acid, alkaline and salt and so on, and are free from splash of inflammable gas, grinding oil, oil mist, iron powder or chips and etc.
3) Well-ventilated and low humidity and dust-free place.
4) Vibration-free place

Environmental Conditions

Item	Condition
Ambient temperature	0˚C to 55˚C (free from freezing)
Ambient humidity	Less than 90% RH (free from condensation)
Storage temperature	–20˚C to 80˚C (free from freezing)
Storage humidity	Less than 90% RH (free from condensation)
Vibration	Lower than 5.9m/S^2 (0.6G), 10 to 60Hz
Altitude	Lower than 1000m

How to Install

1) Rack-mount type. Install in vertical position, and reserve enough space around the servo driver for ventilation. Base mount type (rear mount) is standard (A to D-frame)
2) Use the optional mounting bracket when you want to change the mounting face.

A to D-frame

MADD
MBDD
MCDD
MDDD

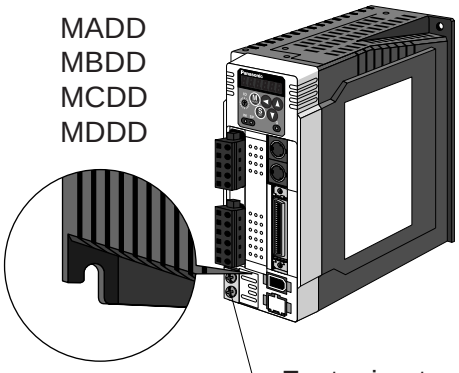

e.g.) In case of C-frame

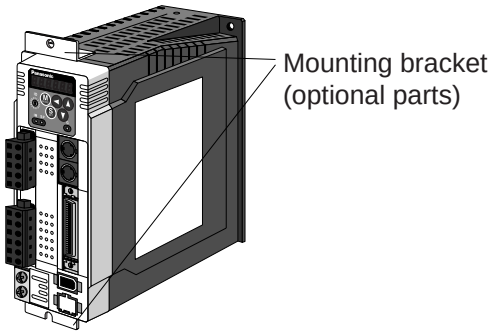

Fastening torque of earth screws (M4) to be 0.39 to 0.59N·m.

E and F-frame

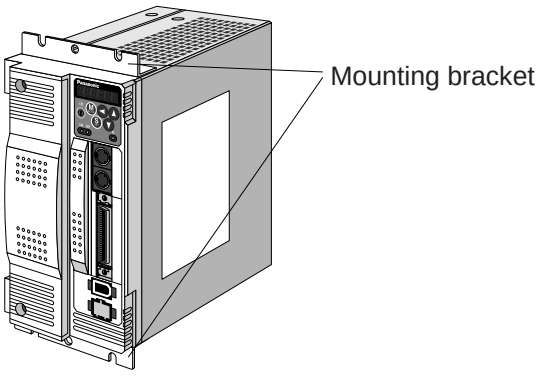

Mounting Direction and Spacing

- Reserve enough surrounding space for effective cooling.
- Install fans to provide uniform distribution of temperature in the control panel.
- Observe the environmental conditions of the control panel described in the next page.

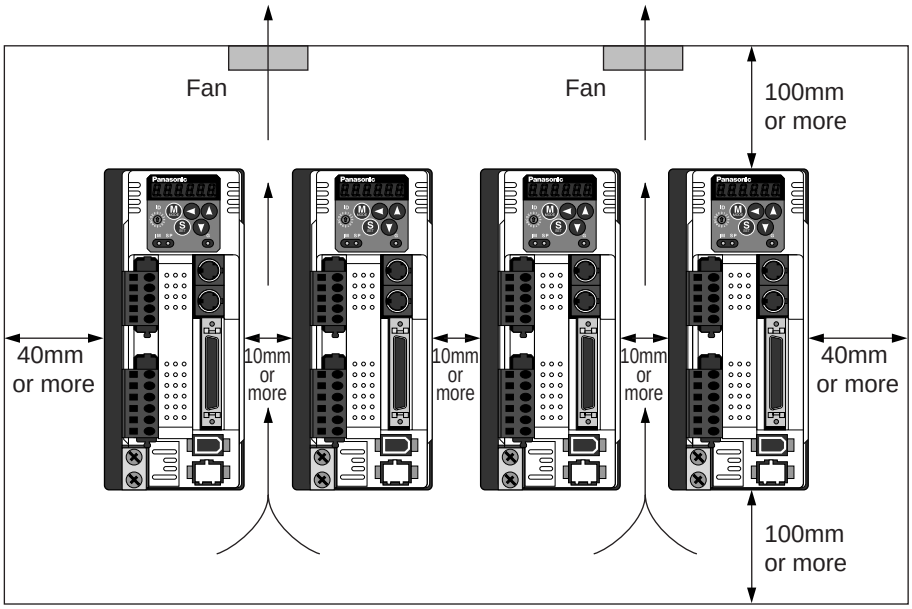

<Note>

It is recommended to use the conductive paint when you make your own mounting bracket, or repaint after peeling off the paint on the machine for installing the products, in order to make noise countermeasure.

Caution on Installation

We have been making the best effort to ensure the highest quality, however, application of exceptionally large external noise disturbance and static electricity, or failure in input power, wiring and components may result in unexpected action. It is highly recommended that you make a fail-safe design and secure the safety in the operative range.

There might be a chance of smoke generation due to the failure of these products. Pay an extra attention when you apply these products in a clean room environment.

How to Install

Motor

Installation Place

Since the conditions of location affect a lot to the motor life, select a place which meets the conditions below.

1) Indoors, where the products are not subjected to rain or direct sun beam. The products are not water-proof.
2) Where the products are not subjected to corrosive atmospheres such as hydrogen sulfide, sulfurous acid, chlorine, ammonia, chloric gas, sulfuric gas, acid, alkaline and salt and so on, and are free from splash of inflammable gas, grinding oil, oil mist, iron powder or chips and etc.
3) Where the motor is free from grinding oil, oil mist, iron powder or chips.
4) Well-ventilated and humid and dust-free place, far apart from the heat source such as a furnace.
5) Easy-to-access place for inspection and cleaning.
6) Vibration-free place.
7) Avoid enclosed place. Motor may gets hot in those enclosure and shorten the motor life.

Environmental Conditions

Item		Condition
Ambient temperature		0˚C to 40˚C (free from freezing) *1
Ambient humidity		Less than 85% RH (free from condensation)
Storage temperature		–20˚C to 80˚C (free from freezing) *2
Storage humidity		Less than 85% RH (free from condensation)
Vibration	Motor only	Lower than 49m/s^2 (5G) at running, 24.5m/s^2 (2.5G) at stall
Impact	Motor only	Lower than 98m/s^2 (10G)
Enclosure rating	Motor only	IP65 (except rotating portion of output shaft and lead wire end) • These motors conform to the test conditions specified in EN standards (EN60529, EN60034-5). Do not use these motors in application where water proof performance is required such as continuous wash-down operation.

*1 Ambient temperature to be measured at 5cm away from the motor.
*2 Permissible temperature for short duration such as transportation.

How to Install

You can mount the motor either horizontally or vertically as long as you observe the followings.

1) Horizontal mounting
   • Mount the motor with cable outlet facing downward for water/oil countermeasure.
2) Vertical mounting
   • Use the motor with oil seal (non-standard) when mounting the motor with gear reducer to prevent the reducer oil/grease from entering to the motor.
3) For mounting dimensions, refer to P.326 to 340 "Dimensions".

Oil/Water Protection

1) Don't submerge the motor cable to water or oil.
2) Install the motor with the cable outlet facing downward.
3) Avoid a place where the motor is subjected to oil or water.
4) Use the motor with an oil seal when used with the gear reducer, so that the oil may not enter to the motor through shaft.

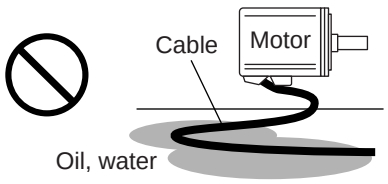

Stress to Cables

1) Avoid a stress application to the cable outlet and connecting portion by bending or self-weight.
2) Especially in an application where the motor itself travels, fix the attached cable and contain the extension junction cable into the bearer so that the stress by bending can be minimized.
3) Take the cable bending radius as large as possible. (Minimum R20mm)

Permissible Load to Output Shaft

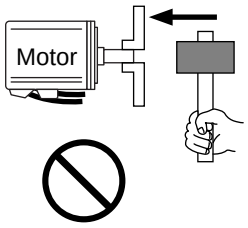

1) Design the mechanical system so that the applied radial load and/or thrust load to the motor shaft at installation and at normal operation can meet the permissible value specified to each model.
2) Pay an extra attention when you use a rigid coupling. (Excess bending load may damage the shaft or deteriorate the bearing life.
3) Use a flexible coupling with high stiffness designed exclusively for servo application in order to make a radial thrust caused by micro misalignment smaller than the permissible value.
4) For permissible load of each model, refer to P.342, "List of Permissible Load to Output Shaft" of Supplement.

Notes on Installation

1) Do not apply direct impact to the shaft by hammer while attaching/detaching a coupling to and from the motor shaft.
   (Or it may damage the encoder mounted on the other side of the shaft.)
2) Make a full alignment. (incomplete alignment may cause vibration and damage the bearing.)
3) If the motor shaft is not electrically grounded, it may cause electrolytic corrosion to the bearing depending on the condition of the machine and its mounting environment, and may result in the bearing noise. Check and verification by customer is required.

How to Install

Console

Installation Place

1) Indoors, where the products are not subjected to rain or direct sun beam. The products are not water-proof.
2) Where the products are not subjected to corrosive atmospheres such as hydrogen sulfide, sulfurous acid, chlorine, ammonia, chloric gas, sulfuric gas, acid, alkaline and salt and so on, and are free from splash of inflammable gas, grinding oil, oil mist, iron powder or chips and etc.
3) Well-ventilated and low humidity and dust-free place.
4) Easy-to-access place for inspection and cleaning

Environmental Conditions

Item	Condition
Ambient temperature	0˚C to 55˚C (free from freezing)
Ambient humidity	Less than 90% RH (free from condensation)
Storage temperature	–20˚C to 80˚C (free from freezing)
Storage humidity	Less than 90% RH (free from condensation)
Vibration	Lower than 5.9m/s^2 (0.6G), 10 to 60Hz
Impact	Conform to JISC0044 (Free fall test, 1m for 2 directions, 2 cycles)
Altitude	Lower than 1000m

<Cautions>

- Do not give strong impact to the products.
- Do not drop the products.
- Do not pull the cables with excess force.
- Avoid the place near to the heat source such as a heater or a large winding resistor.

How to Connect

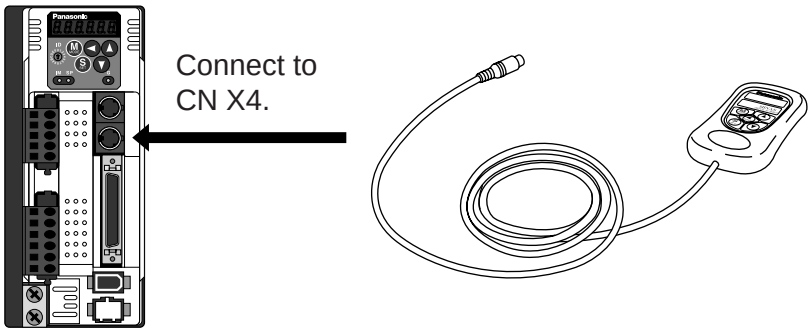

<Remarks>

- Connect the console connector securely to CN X4 connector of the driver
- Never pull the cable to plug in or plug out.

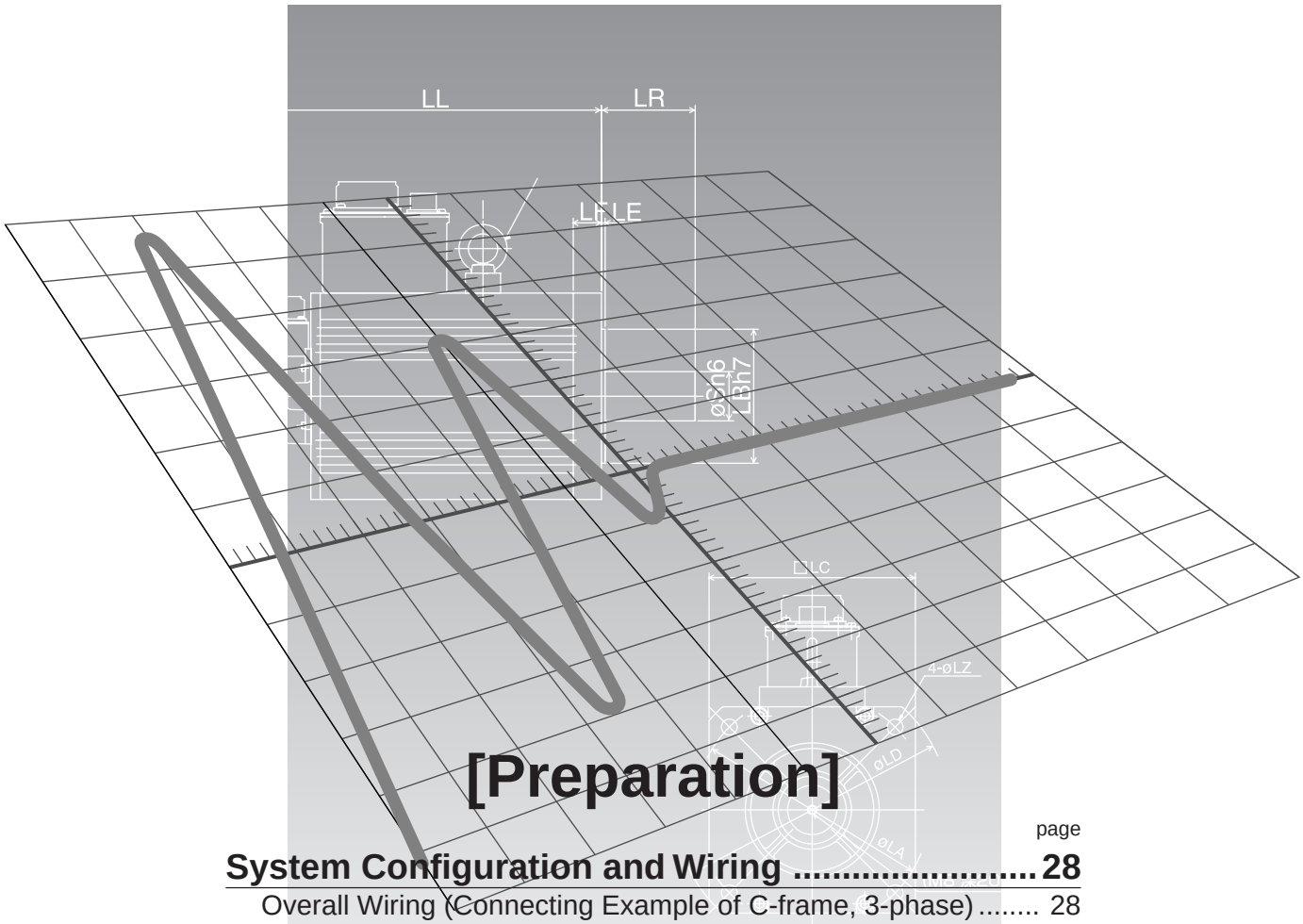

[Preparation]

page

System Configuration and Wiring 28
- Overall Wiring (Connecting Example of C-frame, 3-phase) 28
- Overall Wiring (Connecting Example of E-frame) 30
- Driver and List of Peripheral Equipments 32
- Wiring of the Main Circuit (A to D-frame) 34
- Wiring of the Main Circuit (E and F-frame) 35
- Wiring to the Connector, CN X6 (Connection to Encoder) 38
- Wiring to the Connector, CN X3 and 4 (Connection to PC, Host Controller or Console) 40
- Wiring to the Connector, CN X5 (Connection to Host Controller) 41

Timing Chart 42

Built-in Holding Brake 46

Dynamic Brake 48

Caution on Homing 50

Setup of Parameter and Mode 51
- Outline of Parameter 51
- How to Set 51
- How to Connect 51
- Composition and List of Parameters 52
- Setup of Torque Limit 57

How to Use the Front Panel and Console 58
- Setup with the Front Panel 58
- Setup with the Console 58
- Initial Status of the Front Panel Display(7 Segment LED) 59
- Initial Status of the Console Display(7 Segment LED) 59
- Structure of Each Model 60
- Monitor Mode 63
- Parameter Setup Mode 69
- EEPROM Writing Mode 70
- Auto-Gain Tuning Mode 71
- Auxiliary Function Mode 73
- Copying Function (Console Only) 79

System Configuration and Wiring

Overall Wiring (Connecting Example of C-frame, 3-phase)

• Wiring of the Main Circuit

Circuit Breaker (NFB) (see P.32, 33 and 309.)
Use the circuit breaker matching capacity of the power source to protect the power lines.

Noise Filter (NF) (see P.309)
Prevents external noise from the power lines. And reduces an effect of the noise generated by the servo driver.

Magnetic Contactor (MC) (see P.32 and 33.)
Turns on/off the main power of the servo driver.
Use a surge absorber together with this.
• **Never start nor stop the servo motor with this Magnetic Contactor.**

Reactor (L) (see P.321)
Reduces harmonic current of the main power.

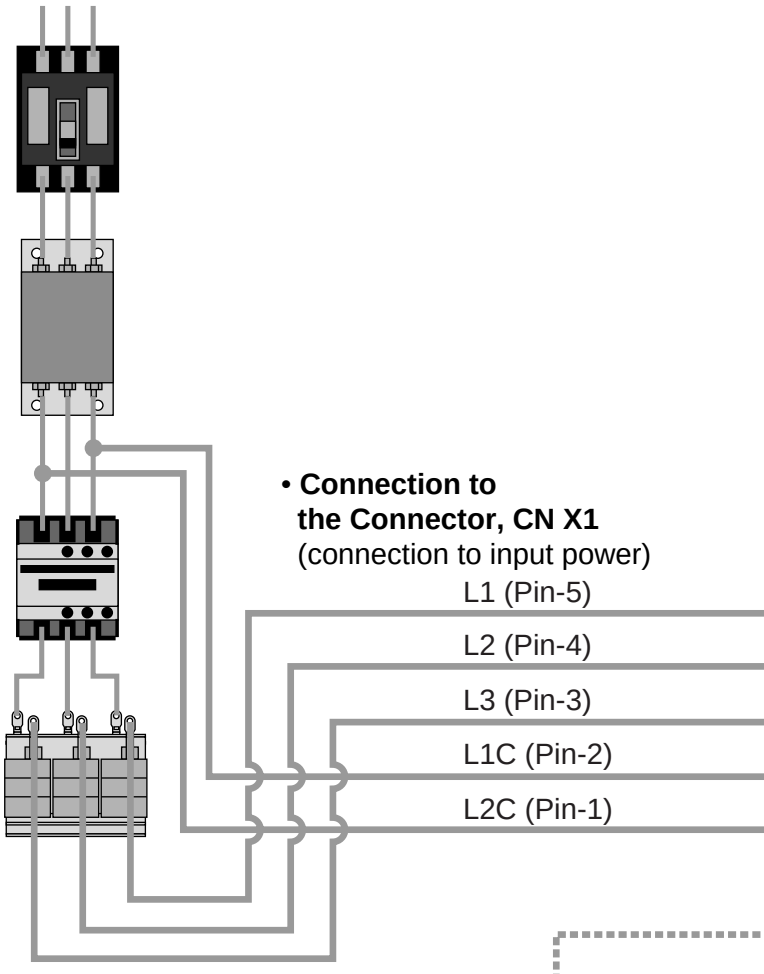

Pin RB1 (6-pin), RB2 (4-pin), and RB3 (5-pin)

- RB2 and RB3 to be kept shorted for normal operation.
- **When the capacity shortage of the regenerative resister is found, disconnect a shorting bar between RB2 and RB3**, then connect **the external regenerative resister** between RB1 and RB2.
  (Note that no regenerative resister is equipped in Frame A and B type. **Install an external regenerative resister on incombustible material, such as metal.** Follow the same wiring connection as the above.)
- When you connect an external regenerative resister, set up Parameter No. 6C to 1 or 2.

Regenerative resistor (optional)
<Remarks>

- When you use an external regenerative resister, install an external protective apparatus, such as thermal fuse without fail.
- Thermal fuse and thermostat are built in to the regenerative resistor (Option). If the thermal fuse is activated, it will not resume.

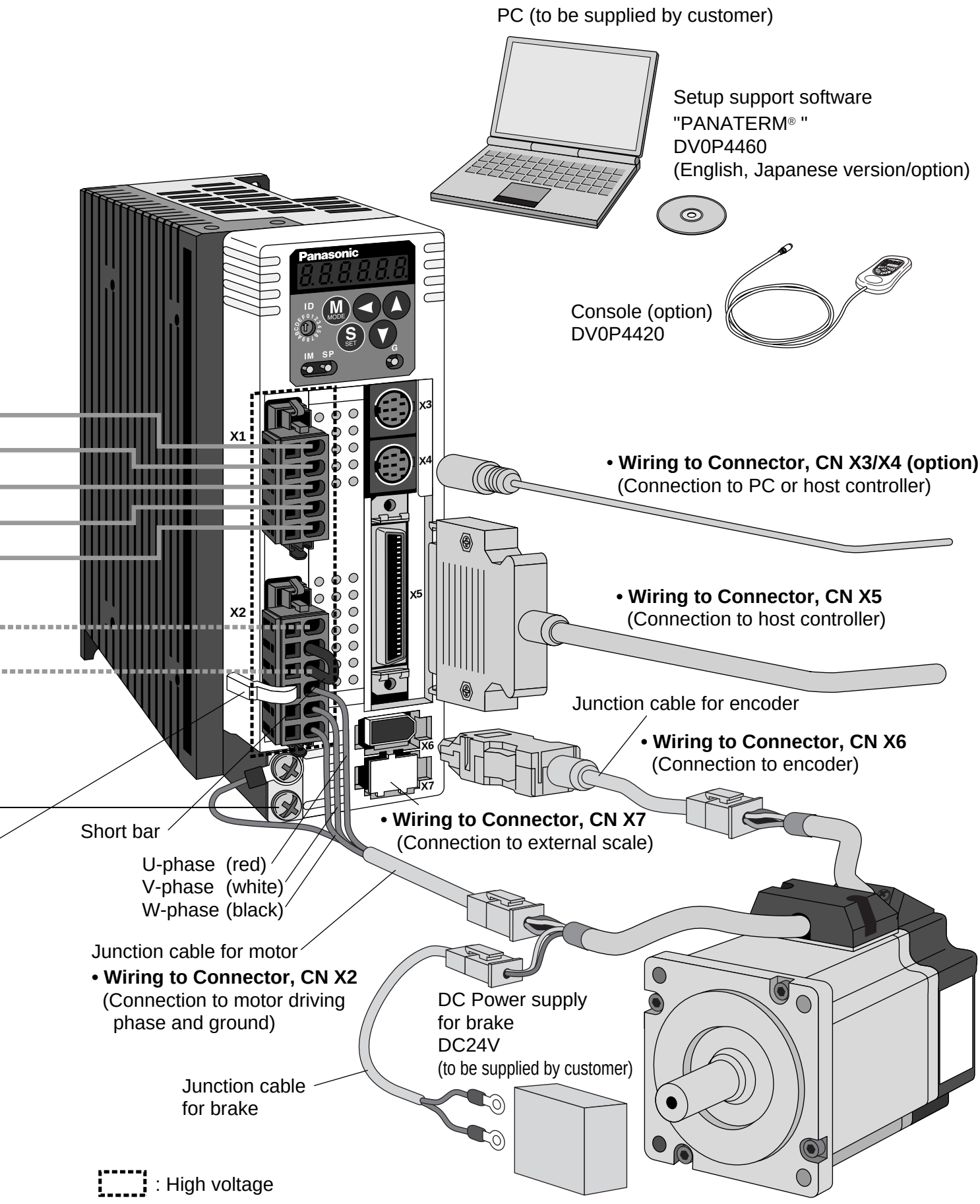
PC (to be supplied by customer)
Setup support software
"PANATERM® "
DV0P4460
(English, Japanese version/option)
Console (option)
DV0P4420
Panasonic
ID
MODE
SET
IM
SP
X1
X2
X3
X4
X5
X6
X7
• Wiring to Connector, CN X3/X4 (option)
(Connection to PC or host controller)
• Wiring to Connector, CN X5
(Connection to host controller)
Junction cable for encoder
• Wiring to Connector, CN X6
(Connection to encoder)
• Wiring to Connector, CN X7
(Connection to external scale)
Short bar
U-phase (red)
V-phase (white)
W-phase (black)
Junction cable for motor
• Wiring to Connector, CN X2
(Connection to motor driving
phase and ground)
DC Power supply
for brake
DC24V
(to be supplied by customer)
Junction cable
for brake
: High voltage

System Configuration and Wiring

Overall Wiring (Connecting Example of E-frame)

• Wiring of the Main Circuit

Circuit Breaker (NFB) (see P.32, 33 and 309.)
Use the circuit breaker matching capacity of the power source to protect the power lines.

Noise Filter (NF) (see P.309)
Prevents external noise from the power lines. And reduces an effect of the noise generated by the servo driver.

Magnetic Contactor (MC) (see P.32 and 33.)
Turns on/off the main power of the servo driver.
Use a surge absorber together with this.
- **Never start nor stop the servo motor with this Magnetic Contactor.**

Reactor (L) (see P.321)
Reduces harmonic current of the main power.

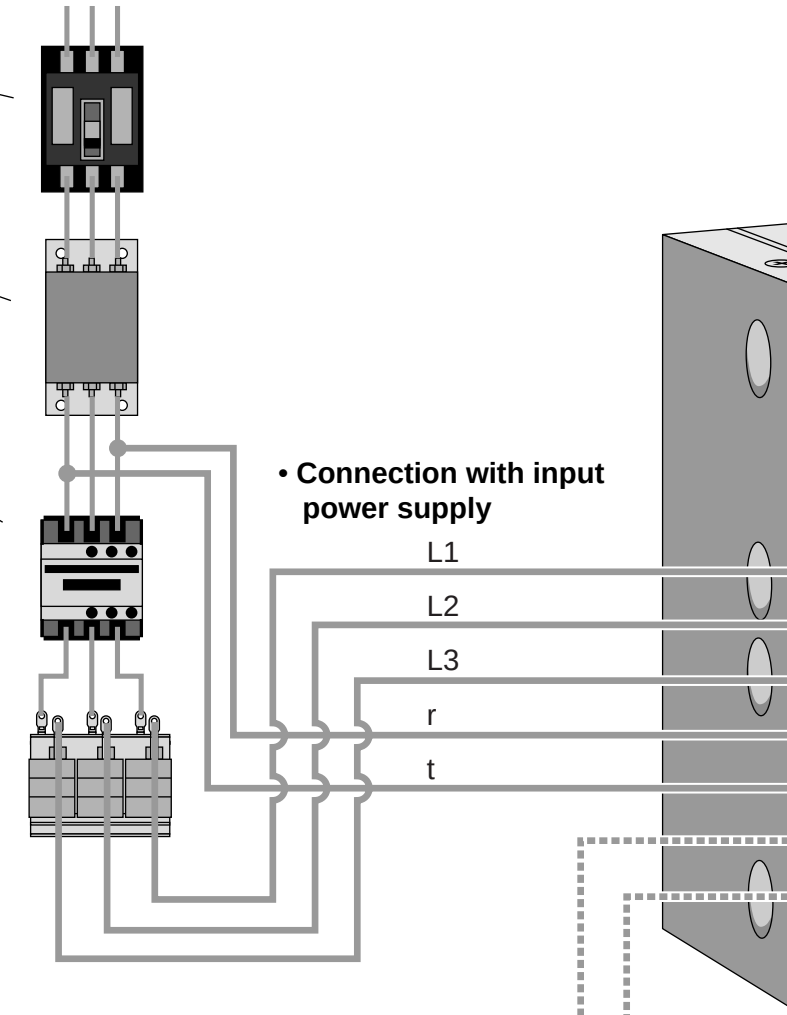

Pin P, B1 and B2...
- B1 and B2 to be kept shorted for normal operation.
- **When the capacity shortage of the regenerative resister is found, disconnect a short bar between B1 and B2,** then connect **the external regenerative resister** between P and B2.
  Install an external regenerative resister on incombustible material, such as metal . Follow the same wiring connection as the above.
- When you connect an external regenerative resister, set up Parameter No. 6C to 1 or 2.

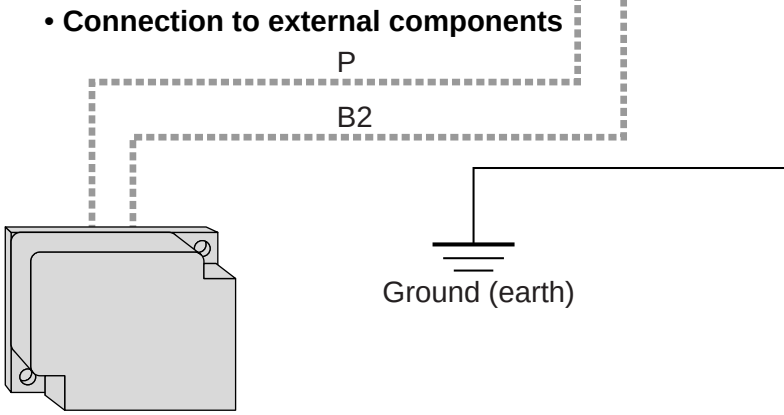

Regenerative resistor (optional)
<Remarks>
- When you use an external regenerative resister, install an external protective apparatus, such as thermal fuse without fail.
- Thermal fuse and thermostat are built in to the regenerative resistor (Option). If the thermal fuse is activated, it will not resume.

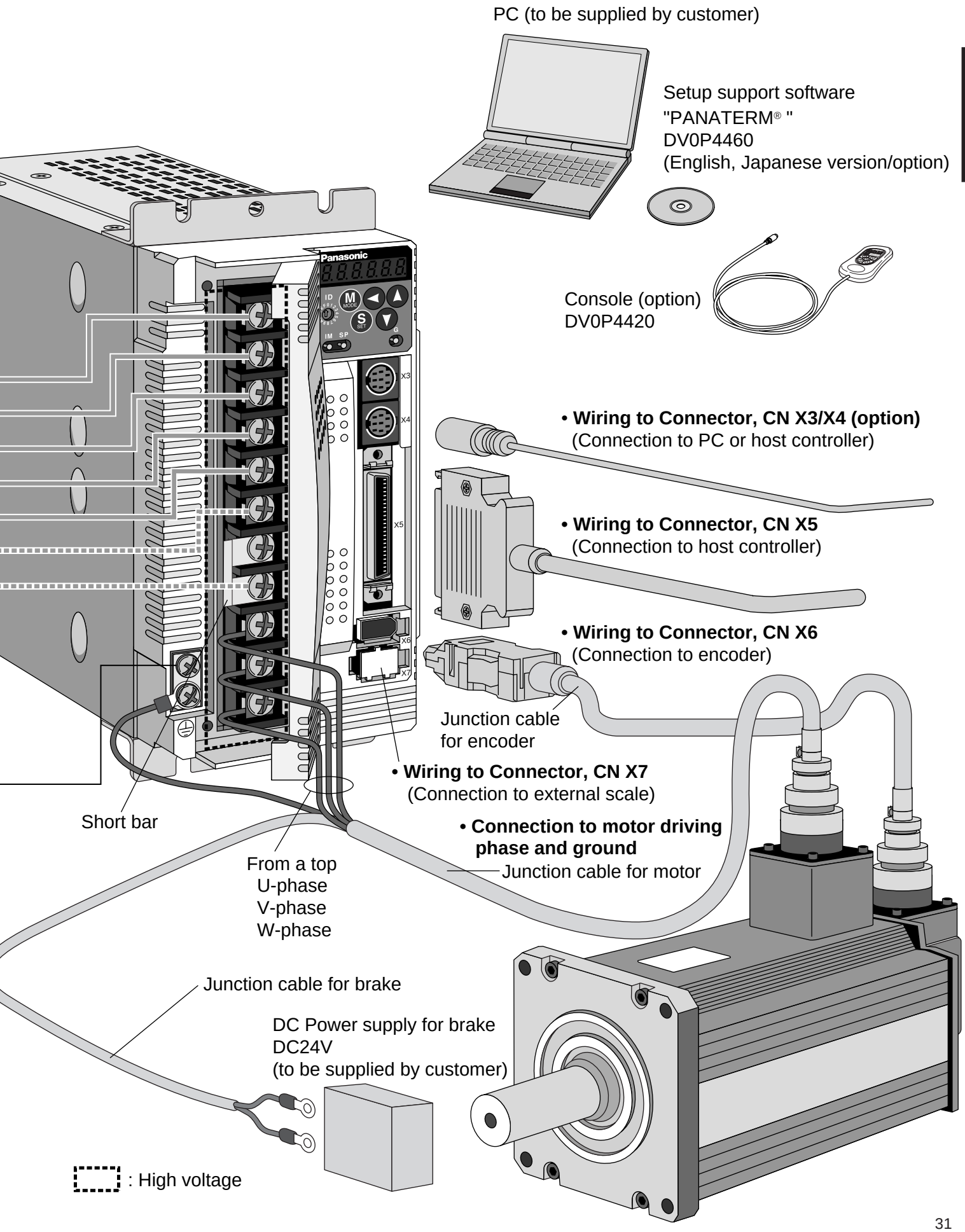
PC (to be supplied by customer)
Setup support software
"PANATERM® "
DV0P4460
(English, Japanese version/option)
Console (option)
DV0P4420
Panasonic
X3
X4
X5
X6
X7
• Wiring to Connector, CN X3/X4 (option)
(Connection to PC or host controller)
• Wiring to Connector, CN X5
(Connection to host controller)
• Wiring to Connector, CN X6
(Connection to encoder)
Junction cable
for encoder
• Wiring to Connector, CN X7
(Connection to external scale)
Short bar
• Connection to motor driving
phase and ground
Junction cable for motor
From a top
U-phase
V-phase
W-phase
Junction cable for brake
DC Power supply for brake
DC24V
(to be supplied by customer)
: High voltage

System Configuration and Wiring

Driver and List of Applicable Peripheral Equipments

<table>
<tr><th>Driver</th><th>Applicable motor</th><th>Voltage</th><th>Rated output</th><th>Required Power (at the rated load)</th><th>Circuit breaker (rated current)</th><th>Noise filter</th><th>Surge absorber</th><th>Noise filter for signal</th><th>Magnetic contactor</th><th>Cable diameter (main circuit)</th><th>Cable diameter (control circuit)</th><th>Connection</th></tr>
<tr><td rowspan="10">MADD</td><td>MSMD</td><td rowspan="2">Single phase, 100V</td><td>50W –100W</td><td>approx. 0.4kVA</td><td rowspan="15">10A</td><td rowspan="10">DV0P4170</td><td rowspan="10">DV0P4190</td><td rowspan="19">DV0P1460</td><td>BMFT61041N (3P+ 1a)</td><td rowspan="15">0.75 to 2.0mm² AWG 14 to 18</td><td rowspan="19">0.75mm² AWG18</td><td rowspan="18">Connection to exclusive connector</td></tr>
<tr><td>MQMA</td><td>100W</td><td>approx. 0.4kVA</td></tr>
<tr><td>MSMD</td><td rowspan="3">Single phase, 200V</td><td>50W –200W</td><td>approx. 0.5kVA</td><td rowspan="5">BMFT61542N (3P+ 1a)</td></tr>
<tr><td rowspan="2">MQMA</td><td>100W</td><td>approx. 0.3kVA</td></tr>
<tr><td>200W</td><td>approx. 0.5kVA</td></tr>
<tr><td>MAMA</td><td>100W</td><td>approx. 0.3kVA</td></tr>
<tr><td rowspan="3">MBDD</td><td>MSMD</td><td rowspan="2">Single phase, 100V</td><td rowspan="2">200W</td><td rowspan="2">approx. 0.5kVA</td><td>BMFT61041N (3P+ 1a)</td></tr>
<tr><td>MQMA</td><td>BMFT61542N (3P+ 1a)</td></tr>
<tr><td>MSMD</td><td rowspan="3">Single phase, 200V</td><td rowspan="2">400W</td><td rowspan="2">approx. 0.9kVA</td><td rowspan="3">BMFT61542N (3P+ 1a)</td></tr>
<tr><td>MQMA</td></tr>
<tr><td>MAMA</td><td>200W</td><td>approx. 0.5kVA</td></tr>
<tr><td rowspan="5">MCDD</td><td>MQMA</td><td rowspan="2">Single phase, 100V</td><td>400W</td><td>approx. 0.9kVA</td><td rowspan="4">DV0P4180</td><td rowspan="9">DV0P1450</td><td>BMFT61541N (3P+ 1a)</td></tr>
<tr><td rowspan="2">MSMD</td><td rowspan="4">Single/ 3- phase, 200V</td><td>750W</td><td>approx. 1.3kVA</td><td rowspan="4">BMFT61542N (3P+ 1a)</td></tr>
<tr><td>MAMA</td><td rowspan="2">400W</td><td rowspan="2">approx. 0.9kVA</td></tr>
<tr><td>MFMA</td></tr>
<tr><td>MHMA</td><td>500W</td><td>approx. 1.1kVA</td><td rowspan="2">15A</td></tr>
<tr><td rowspan="9">MDDD</td><td>MAMA</td><td rowspan="9">Single/ 3- phase, 200V</td><td>750W</td><td>approx. 1.6kVA</td><td rowspan="5">DV0P4220</td><td rowspan="9">BMFT61842N (3P+ 1a)</td><td rowspan="9">2.0mm² AWG14</td></tr>
<tr><td>MDMA</td><td rowspan="2">1.0kW</td><td rowspan="2">approx. 1.8kVA</td></tr>
<tr><td>MHMA</td></tr>
<tr><td>MGMA</td><td>900W</td><td>approx. 1.8kVA</td><td rowspan="6">20A</td></tr>
<tr><td>MSMA</td><td>1.0kW</td><td>approx. 1.8kVA</td></tr>
<tr><td>MHMA</td><td rowspan="4">1.5kW</td><td rowspan="4">approx. 2.3kVA</td></tr>
<tr><td>MDMA</td></tr>
<tr><td>MSMA</td></tr>
<tr><td>MFMA</td></tr>
<tr><td rowspan="4">MEDD</td><td>MDMA</td><td rowspan="4">3- phase, 200V</td><td rowspan="3">2.0kW</td><td rowspan="3">approx. 3.3kVA</td><td rowspan="4">30A</td><td rowspan="4">BMF6352N (3P+ 2a2b)</td><td rowspan="3">2.0mm² AWG14</td><td rowspan="4">Terminal block M5 11.0 or smaller 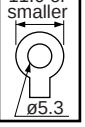 ø5.3</td></tr>
<tr><td>MSMA</td></tr>
<tr><td>MHMA</td></tr>
<tr><td>MFMA</td><td>2.5kW</td><td>approx. 3.8kVA</td><td>3.5mm² AWG12</td></tr>
</table>

Driver	Applicable motor	Voltage	Rated output	Required Power (at the rated load)	Circuit breaker (rated current)	Noise filter	Surge absorber	Noise filter for signal	Magnetic contactor	Cable diameter (main circuit)	Cable diameter (control circuit)	Connection
MFDD	MGMA	3- phase, 200V	2.0kW	approx. 3.8kVA	50A	DV0P3410	DV0P1450	DV0P1460	BMF6352N (3P+ 2a2b)	3.5mm² AWG12	0.75mm² AWG18	Terminal block M5 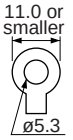
	MDMA		3.0kW	approx. 4.5kVA								
	MHMA											
	MSMA											
	MGMA											
	MDMA		4.0kW	approx. 6kVA					BMF6652N (3P+ 2a2b)			
	MHMA											
	MSMA											
	MFMA		4.5kW	approx. 6.8kVA						5.3mm² AWG10		
	MGMA			approx. 7.5kVA								
	MDMA		5.0kW	approx. 7.5kVA								
	MHMA											
	MSMA											

- Select a single and 3-phase common specifications according to the power source.
- Manufacturer of circuit breaker and magnetic contactor : Matsushita Electric Works.
  To comply to EC Directives, install a circuit breaker between the power and the noise filter without fail, and the circuit breaker should conform to IEC Standards and UL recognized (Listed and Ⓤ marked).
  5000Arms, 240V is the maximum capacity to be delivered to the circuit of 750W or larger model when the maximum current value of the circuit breaker is limited to 20A.
- For details of noise filters, refer to P.309, "Noise Filter" and P.311, "Driver and List of Applicable Peripheral Equipments (EC Directives)" of Supplement.

<Remarks>

- Select and use the circuit breaker and noise filter with matching capacity to those of the power source, considering the load conditions as well.
- Terminal block and protective earth terminal
  Use a copper conductor cable with temperature rating of 60˚C or higher.
  Protective earth terminal is M4 for A to D-frame, and M5 for E and F-frame.
  Larger tightening torque of the screw than the max. value (M4 : 1.2 N·m, M5 : 2.0 N·m) may damage the terminal block.
- Earth cable diameter should be 2.0mm² (AWG14) or larger for 50W to 2.0kW model, and 3.5mm² (AWG12) or larger for 2.5kW to 4.0kW, and 5.3mm² (AWG10) or larger for 4.5kW to 5kW model.
- Use the attached exclusive connectors for A to D-frame, and maintain the peeled off length of 8 to 9mm.
- Tightening torque of the screws for connector (CN X5) for the connection to the host to be 0.3 to 0.35 N·m.
  Larger tightening torque than these may damage the connector at the driver side.

System Configuration and Wiring

Wiring of the Main Circuit (A to D-frame)

- Wiring should be performed by a specialist or an authorized personnel.
- Do not turn on the power until the wiring is completed.

Tips on Wiring

1) Peel off the insulation cover of the cable.
(Observe the dimension as the right fig. shows.)

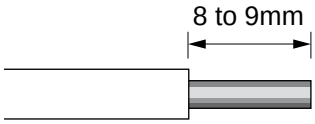

2) Insert the cable to the connector detached from the driver. (See P.37 for details.)

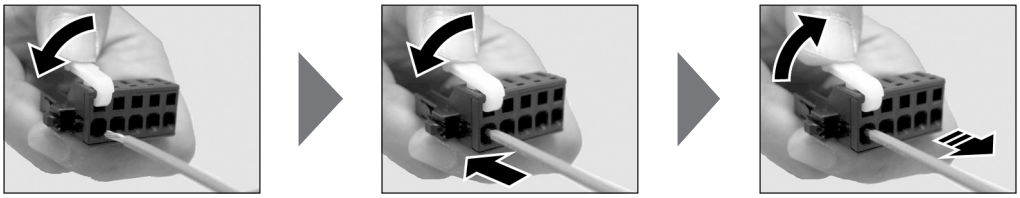

3) Connect the wired connector to the driver.

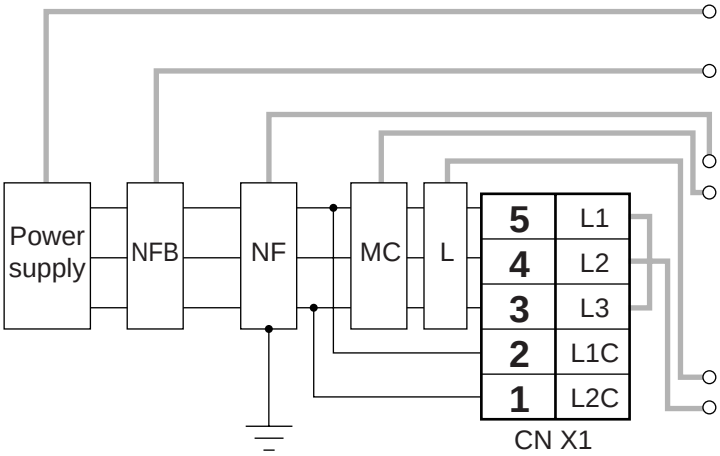

- Check the name plate of the driver for power specifications.
- Provide a circuit breaker, or a leakage breaker. The leakage breaker to be the one designed for "Inverter" and is equipped with countermeasures for harmonics.
- Provide a noise filter without fail.
- Provide a surge absorber to a coil of the Magnetic Contactor. **Never start/stop the motor with this Magnetic Contactor.**
  Connect a fuse in series with the surge absorber. Ask the manufacturer of the Magnetic Contactor for the fuse rating.
- Provide an AC Reactor.
- **Connect L1 and L1C, and L3 and L2C at single phase use (100V and 200V), and don' t use L2.**

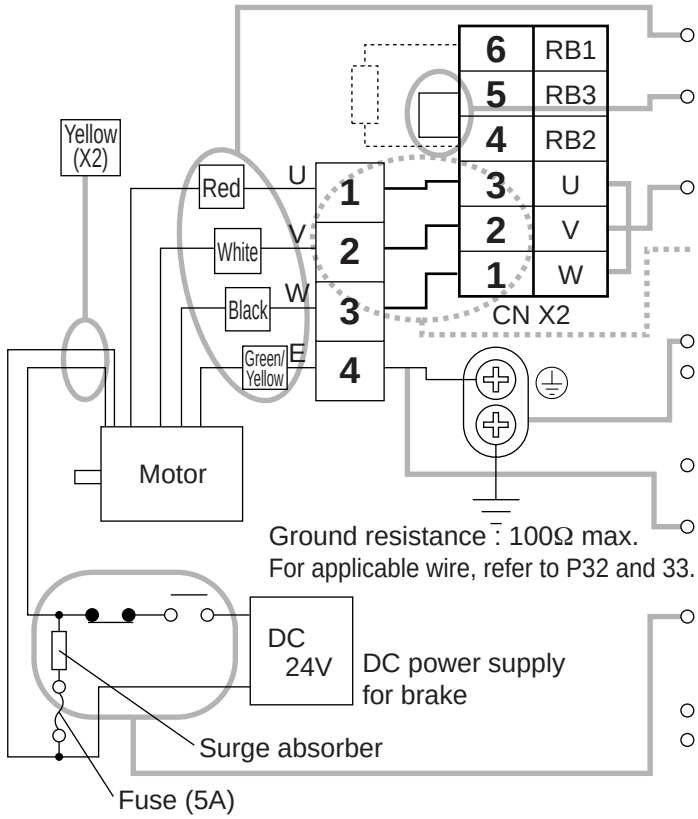

- Match the colors of the motor lead wires to those of the corresponding motor output terminals (U,V,W).
- Don't disconnect the shorting cable between RB2 and RB3 (C and D frame type). Disconnect this only when the external regenerative register is used.
- **Avoid shorting and ground fault. Don' t connect the main power.**
- *** Connect pin 3 of the connector on the amplifier side with pin 1 of the connector on the motor side.**
- **Earth-ground this.**
- Connect the protective earth terminal (⏚) of the driver and the protective earth (earth plate) of the control panel without fail to prevent electrical shock.
- Don't co-clamp the earth wires to the protective earth terminal (⏚) . Two terminals are provided.
- **Don' t connect the earth cable to other inserting slot, nor make them touch.**
- Compose a duplex Brake Control Circuit so that the brake can also be activated by an external emergency stop signal.
- The Electromagnetic Brake has no polarity.
- For the capacity of the electromagnetic brake and how to use it, refer to P.47, "Specifications of Built-in Holding Brake".
- Provide a surge absorber.
- Connect a 5A fuse in series with the surge absorber.

Wiring of the Main Circuit (E and F-frame)

- Wiring should be performed by a specialist or an authorized personnel.
- Do not turn on the power until the wiring is completed.

Tips on Wiring

1) Take off the cover fixing screws, and detach the terminal cover.

2) Make wiring
Use clamp type terminals of round shape with insulation cover for wiring to the terminal block. For cable diameter and size, rater to "Driver and List of Applicable Peripheral Equipments" (P.32 and 33).

3) Attach the terminal cover, and fix with screws.
Fastening torque of cover fixed screw in less than 0.2 N·m.

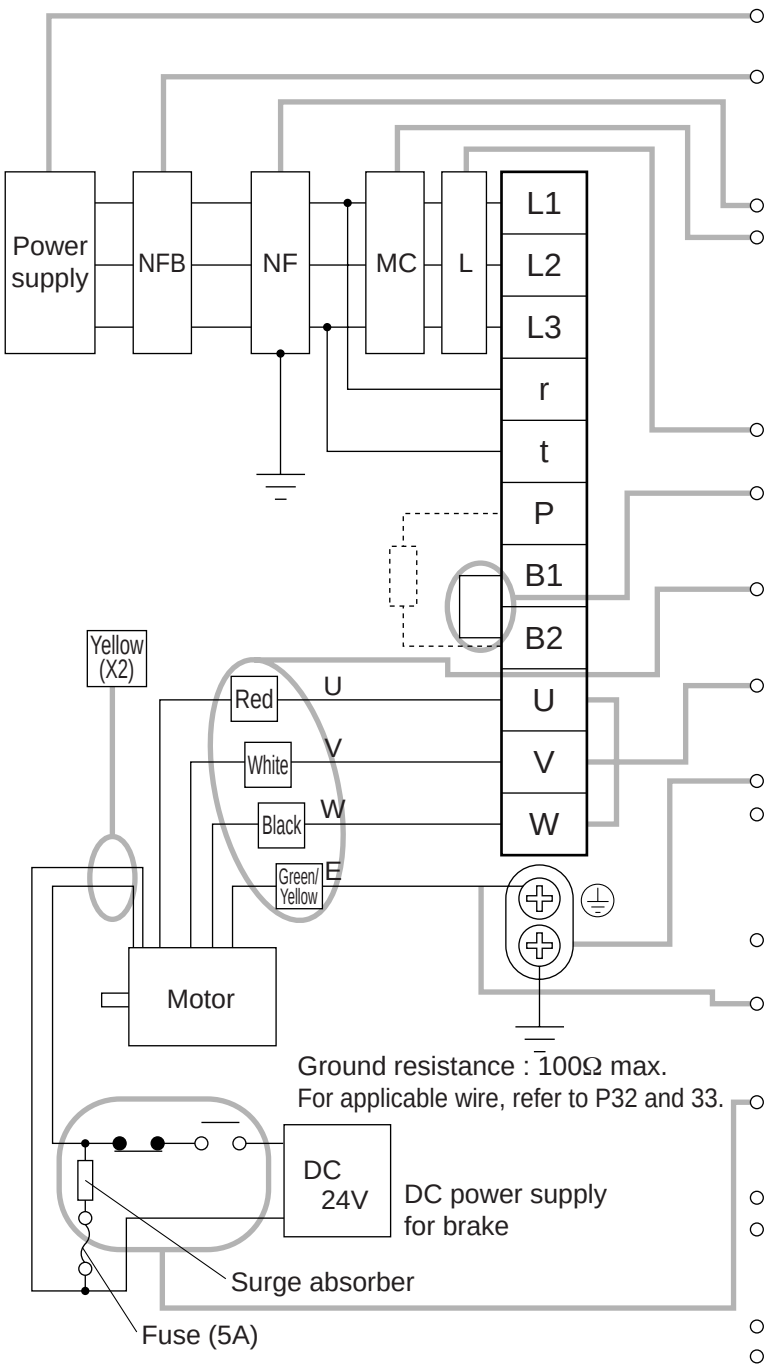

- Check the name plate of the driver for power specifications.
- Provide a circuit breaker, or a leakage breaker. The leakage breaker to be the one designed for "Inverter" and is equipped with countermeasures for harmonics.
- Provide a noise filter without fail.
- Provide a surge absorber to a coil of the Magnetic Contactor. **Never start/stop the motor with this Magnetic Contactor.**
  Connect a fuse in series with the surge absorber. Ask the manufacturer of the Magnetic Contactor for the fuse rating.
- Provide an AC Reactor.

- Don't disconnect the short bar between B1 and B2. Disconnect this only when an external regenerative register is used.
- Match the colors of the motor lead wires to those of the corresponding motor output terminals (U,V,W).
- **Avoid shorting and ground fault.**
  Don' t connect the main power.

- Earth-ground this.
- **Connect the protective earth terminal (⏚) of the driver and the protective earth (earth plate) of the control panel without fail to prevent electrical shock.**
- Don't co-clamp the earth wires to the protective earth terminal (⏚) . Two terminals are provided.
- Don't connect the earth cable to other inserting slot, nor make them touch.

- Compose a duplex Brake Control Circuit so that the brake can also be activated by an external emergency stop signal.
- The Electromagnetic Brake has no polarity.
- For the capacity of the electromagnetic brake and how to use it, refer to P.47, "Specifications of Built-in Holding Brake".
- Provide a surge absorber.
- Connect a 5A fuse in series with the surge absorber.

System Configuration and Wiring

Wiring Diagram

Compose the circuit so that the main circuit power will be shut off when an error occurs.

In Case of Single Phase, 100V (A and B-frame)

Power supply Single phase, 100V $^{+10\%}_{-15\%}$ to 115V $^{+10\%}_{-15\%}$

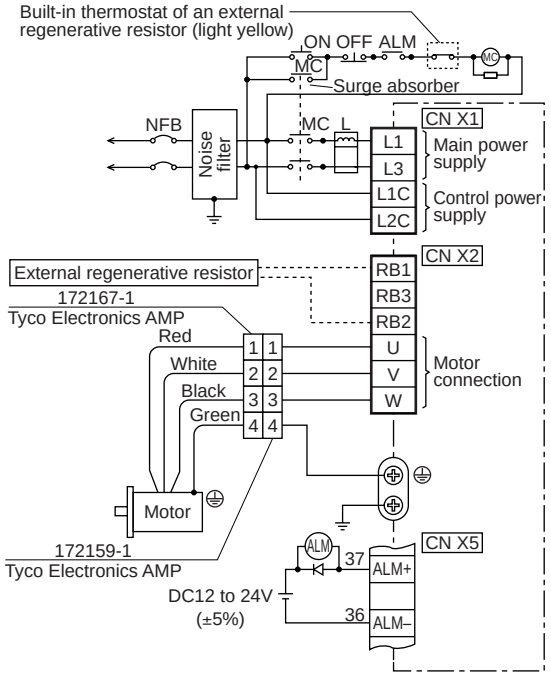

In Case of Single Phase, 200V (A and B-frame)

Power supply Single phase, 200V $^{+10\%}_{-15\%}$ to 240V $^{+10\%}_{-15\%}$

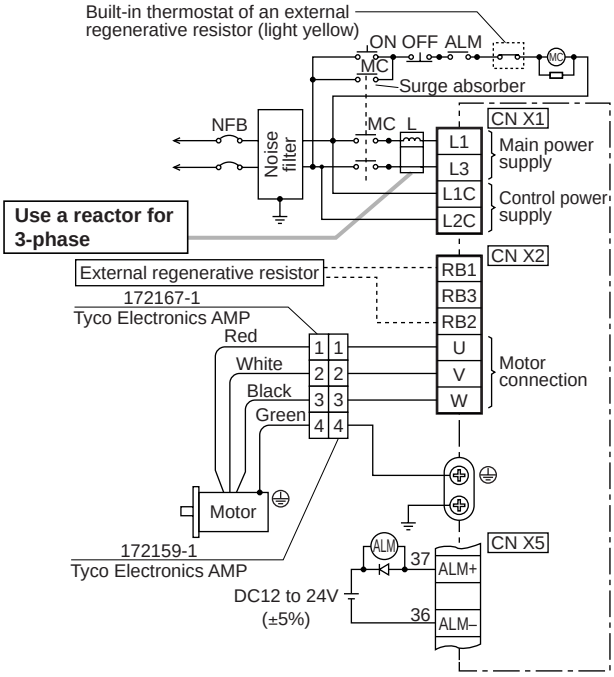

In Case of Single Phase, 200V (C and D-frame)

Power supply Single phase, 200V $^{+10\%}_{-15\%}$ to 240V $^{+10\%}_{-15\%}$

<Remarks>
When you use single phase, connect the main power between L1 and L3 terminals.

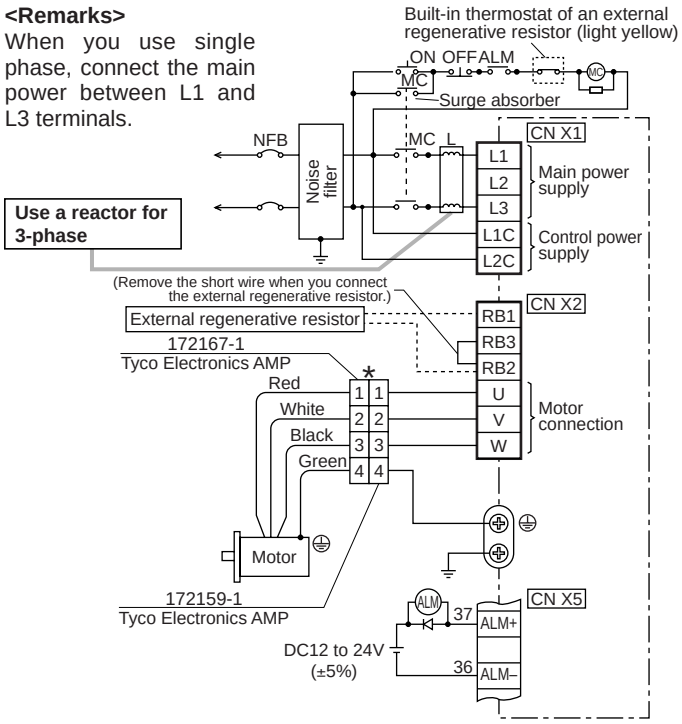

In Case of 3-Phase, 200V (C and D-frame)

Power supply 3-phase, 200V $^{+10\%}_{-15\%}$ to 240V $^{+10\%}_{-15\%}$

<Remarks>
When you use single phase, connect the main power between L1 and L3 terminals.

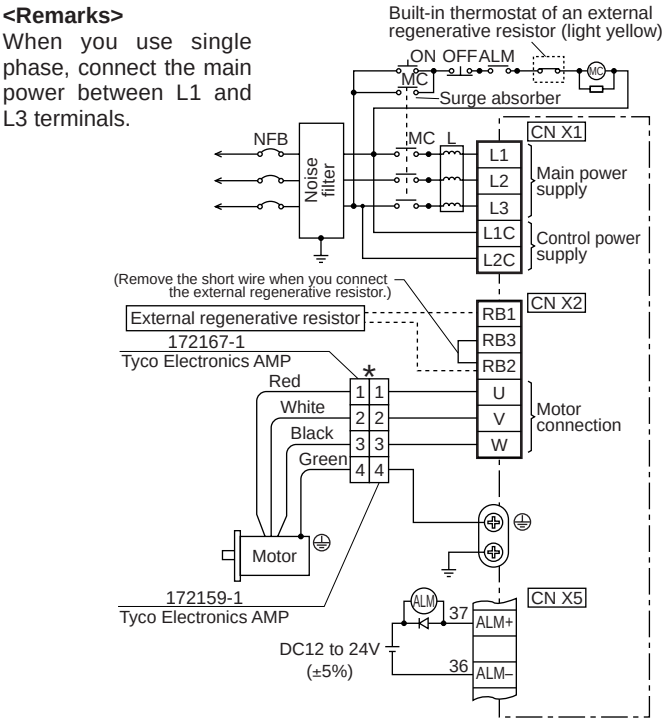

* When you use motor model of MSMA, MDMA, MFMA, MHMA and MGMA, use the connections as the right table shows..

[Motor portion]
Connector : by Japan Aviation Electronics Ind.

<Remark>
Do not connect anything to NC.

JL04V-2E20-4PE-B-R
JL04HV-2E22-22PE-B-R

PIN No.	Application
A	U-phase
B	V-phase
C	W-phase
D	Ground

JL04V-2E20-18PE-B-R

PIN No.	Application
G	Brake
H	Brake
A	NC
F	U-phase
I	V-phase
B	W-phase
E	Ground
D	Ground
C	NC

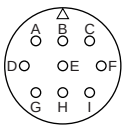

JL04V-2E24-11PE-B-R

PIN No.	Application
A	Brake
B	Brake
C	NC
D	U-phase
E	V-phase
F	W-phase
G	Ground
H	Ground
I	NC

In Case of 3-Phase, 200V (E and F-frame)

Power supply 3-phase, 200V $^{+10\%}_{-15\%}$ to 230V $^{+10\%}_{-15\%}$

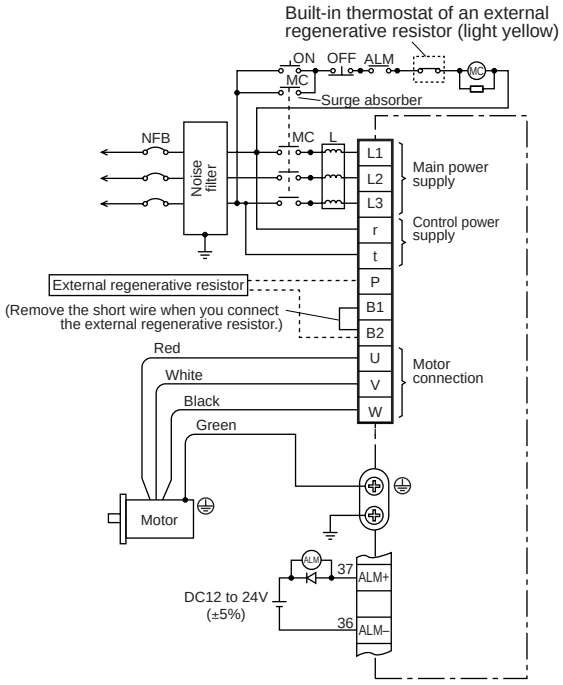

[Motor portion]
Connector : by Japan Aviation Electronics Ind.

JL04V-2E20-4PE-B-R
JL04HV-2E22-22PE-B-R

PIN No.	Application
A	U-phase
B	V-phase
C	W-phase
D	Ground

JL04V-2E20-18PE-B-R

PIN No.	Application
G	Brake
H	Brake
A	NC
F	U-phase
I	V-phase
B	W-phase
E	Ground
D	Ground
C	NC

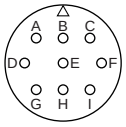

JL04V-2E24-11PE-B-R

PIN No.	Application
A	Brake
B	Brake
C	NC
D	U-phase
E	V-phase
F	W-phase
G	Ground
H	Ground
I	NC

<Remark> Do not connect anything to NC.

Wiring method to connector (A to D-frame)

• Follow the procedures below for the wiring connection to the Connector CN X1 and X2.

How to connect

1. Peel off the insulation cover of the cable. (see the right fig for exact length for peeling.)
2. Insert the cable to the connecter in the following 2 methods.
   (a) Using the attached Handle Lever
   (b) Using a screw driver (blade width of 3.0 to 3.5 mm)

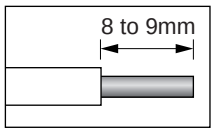

(a) Using handle lever

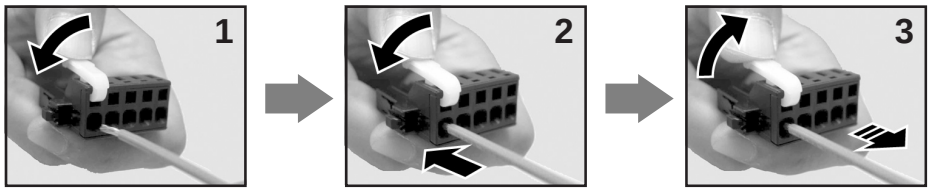

Attach the handle lever to the handling slot on the upper portion. Press down the lever to push down the spring.

Insert the peeled cable while pressing down the lever, until it hits the insertion slot (round hole).

Release the lever.

* You can pull out the cable by pushing down the spring as the above.

(b) Using screw driver

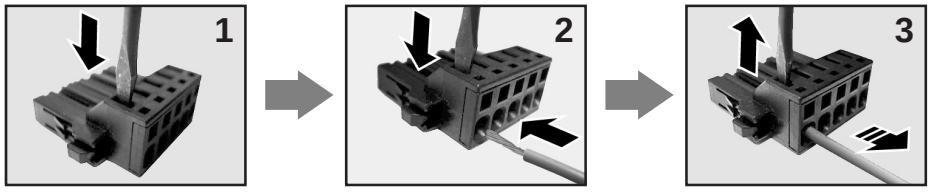

Press the screw driver to the handling slot on the upper portion to push down the spring.

Insert the peeled cable while pressing down the screw driver, until it hits the insertion slot (round hole).

Release the screw driver.

* You can pull out the cable by pushing down the spring as the above.

<CAUTION>

- Peel off the cable with exact length (8 to 9 mm).
- Take off the connector from the Servo Driver before making connection.
- Insert one cable into each one of cable insertion slot.
- Pay attention to injury by screw driver.

System Configuration and Wiring

Wiring to the Connector, CN X6 (Connection to Encoder)

Tips on Wiring

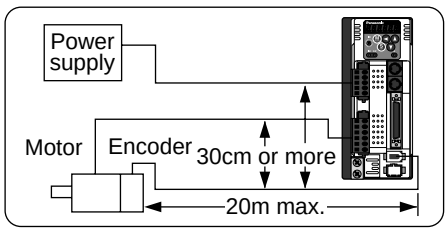

◦Maximum cable length between the driver and the motor to be 20m. Consult with a dealer or distributor if you want to use the longer cable than 20m. (Refer to the back cover.)

◦Keep this wiring away from the main circuit by 30 cm or more. Don't guide this wiring through the same duct with the main, nor bind them together.

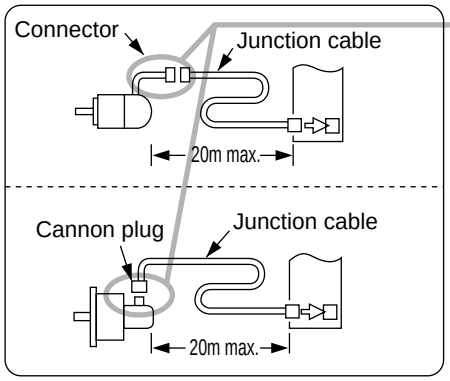

◦Encoder outlets are different by the motors, flyer leads + connecter and cannon plug type.

◦When you make your own encoder junction cable (for connectors, refer to P.319, "Options (Connector Kit for Motor and Encoder connection)" of Supplement.

1) Refer to the Wiring Diagram below.
2) Cable to be : Shielded twisted pair cable with core diameter of 0.18mm^2 or larger (AWG24), and with higher bending resistance.

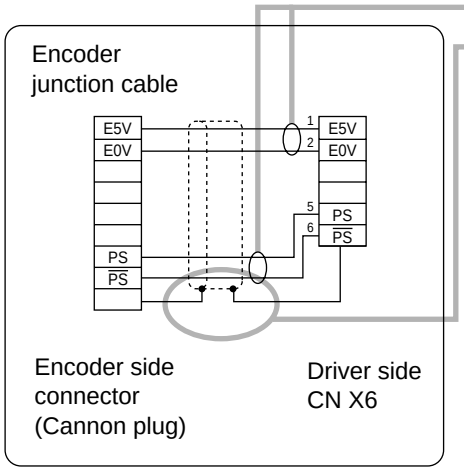

3) Use twisted pair cable for corresponding signal/power wiring.
4) Shielding treatment
   • Shield wall of the driver side : Connect to Pin-20 (FG) of CN X6.
   • Shield wall of the motor side :
   Tyco Electronics AMP
   In case of 9-pin (17-bit absolute/incremental encoder) : Connect to pin-3.
   In case of 6-pin (2500P/r incremental encoder) : Connect to pin-6.
   In case of cannon plug, connect to Pin-J.
5) Connect nothing to the empty terminals of each connector and Cannon Plug.

Wiring Diagram

In case of 2500P/r incremental encoder

- **MSMD 50W to 750W**
- **MAMA 100W to 750W**
- **MQMA 100W to 400W**

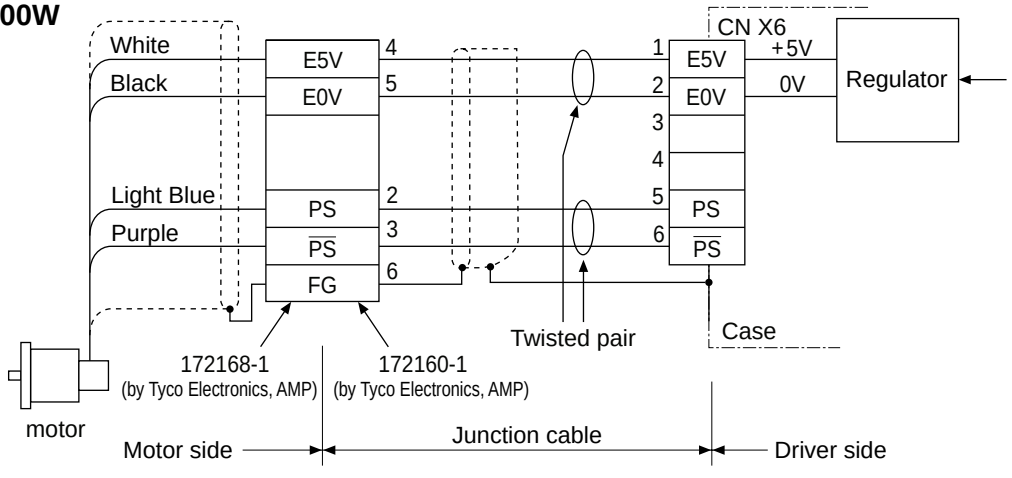

- **MSMA 1kW to 5kW**
- **MDMA 1kW to 5kW**
- **MHMA 500W to 5kW**
- **MFMA 400W to 4.5kW**
- **MGMA 900W to 4.5kW**

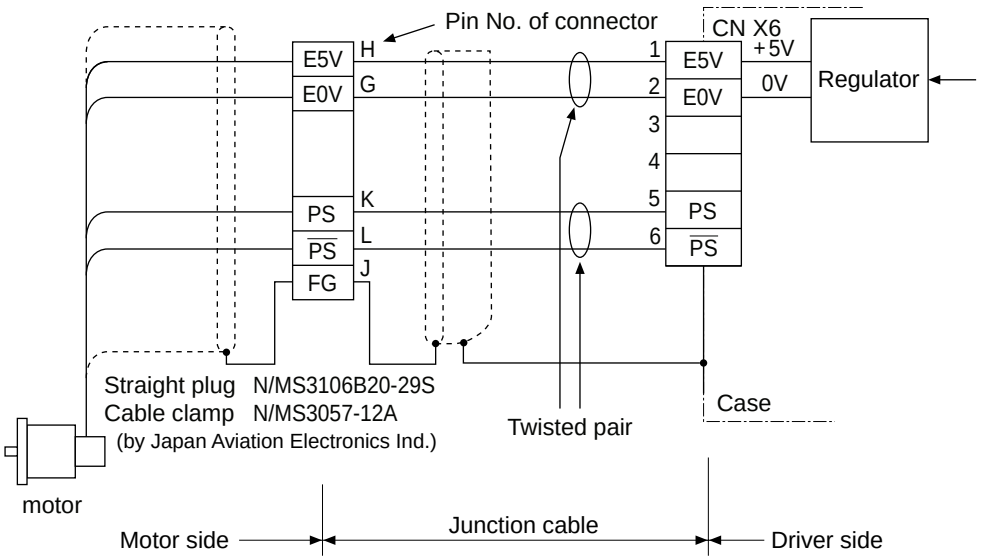

Wiring Diagram

In case of 17-bit absolute/incremental encoder

- **MSMD 50W to 750W**
- **MAMA 100W to 750W**
- **MQMA 100W to 400W**

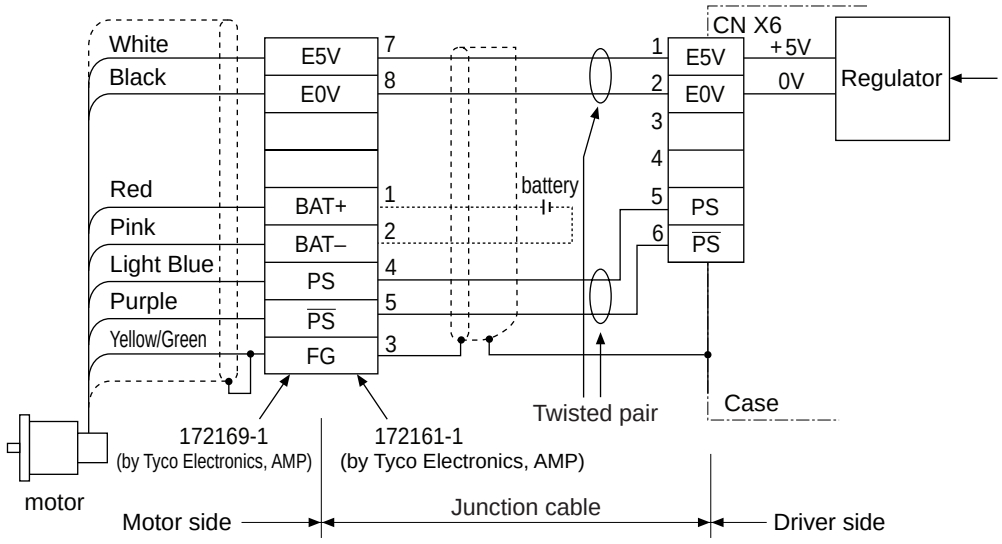

- **MSMA 1kW to 5kW**
- **MDMA 1kW to 5kW**
- **MHMA 500W to 5kW**
- **MFMA 400W to 4.5kW**
- **MGMA 900W to 4.5kW**

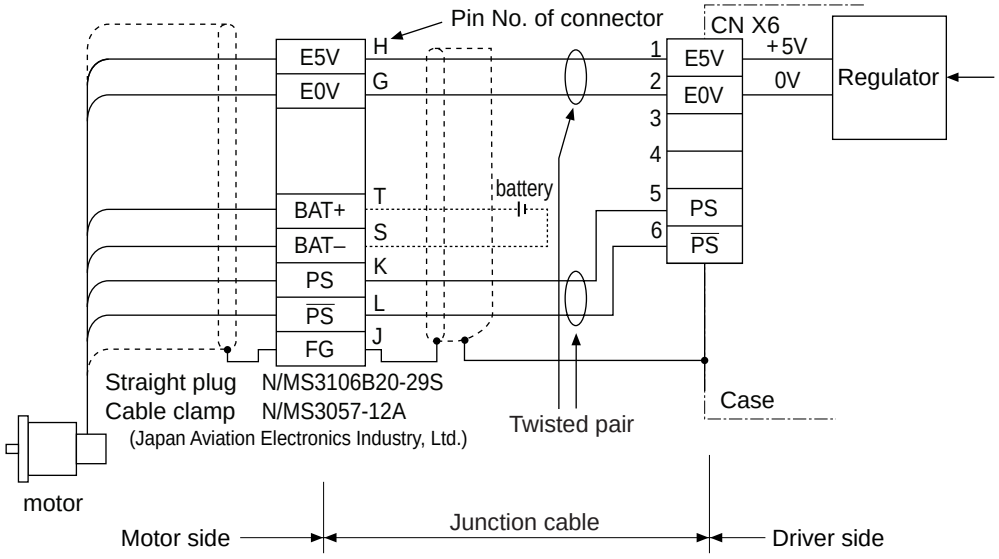

System Configuration and Wiring

Wiring to the Connectors, CN X3 and X4 (Connection to PC, Host or Console)

• This servo driver features 2 kinds of communication function, RS232 and RS485, and you can use in 3 connecting methods.

In Case of Communication with One Driver Using RS232

By connecting the PC and the driver via RS232, you can utilize the setup support software, "PANATERM®" (option). "PANATERM "offers useful functions such as monitoring of various status, setup/change of parameters and waveform graphic display and so on.

[How to connect]

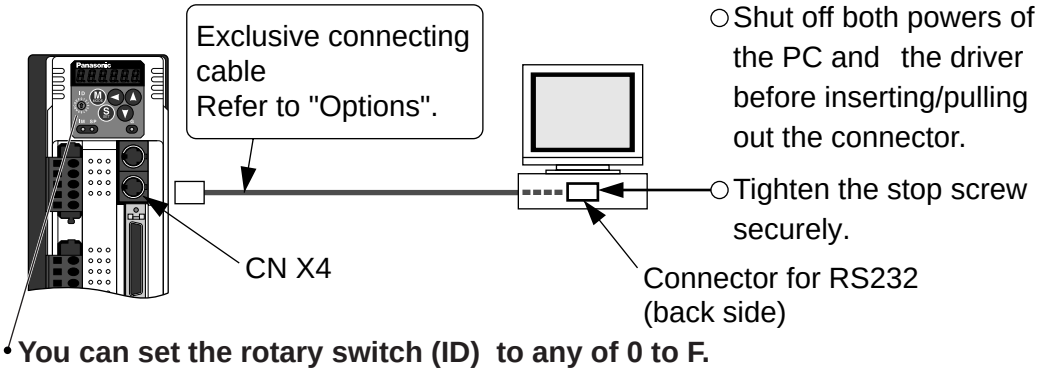

• **You can set the rotary switch (ID) to any of 0 to F.**

In Case of Communication with Multiple Drivers Using RS232 and RS485

By connecting the host (PC and host controller) and one driver via RS232 and connecting other drivers via RS485 each other, you can connect multiple drivers..

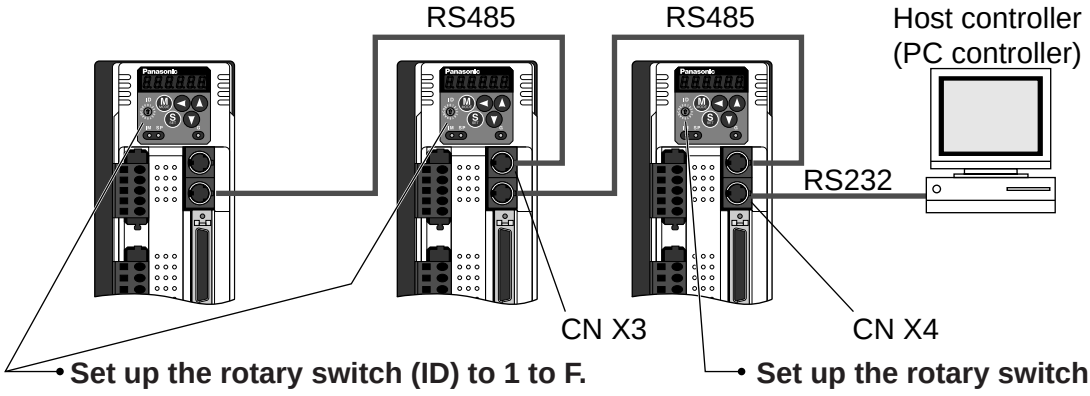

• **Set up the rotary switch (ID) to 1 to F.**

• **Set up the rotary switch (ID) to 0.**

In Case of Communication with Multiple Drivers Using RS485 Only

By connecting the host with all drivers via RS485 you can realize connection with multiple drivers.

• Set up the rotary switch (ID) to 1 to F.

<Notes>

• You can connect up to 15 drivers with the host.

• For details, refer to P.278, "Communication"of Supplement.

Connection with the Console

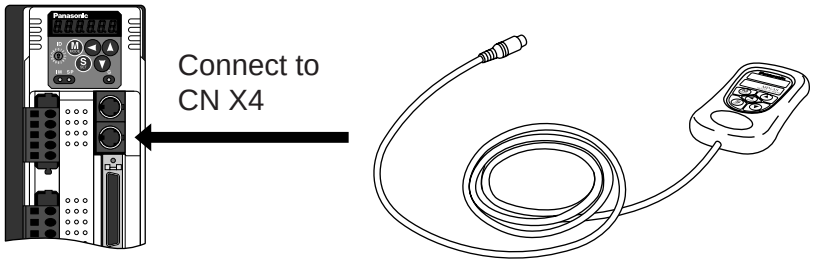

Wiring to the Connector, CN X5 (Connection to Host Controller)

• Tips on wiring

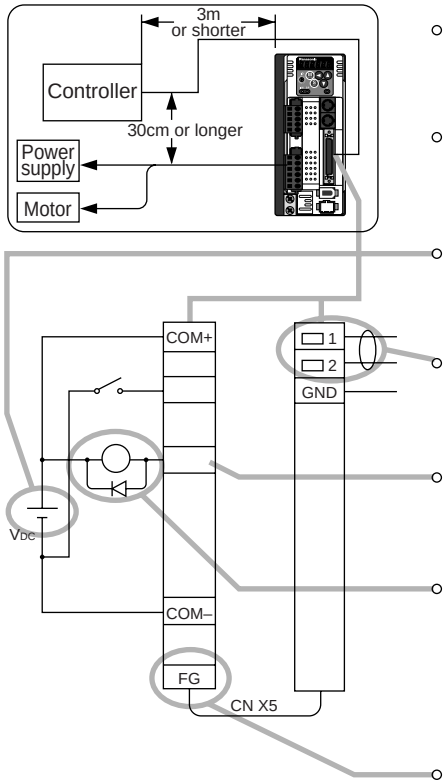

- Peripheral apparatus such as host controller should be located within 3m.
- Separate the main circuit at least 30cm away.
  Don't pass them in the same duct, nor bind them together.
- Power supply for control signals (V_{CC}) between COM+ and COM– (V_{DC}) should be prepared by customer.
- Use shield twisted pair for the wiring of command pulse input and encoder signal output.
- Don't apply more than 24V to the control signal output terminals, nor run 50mA or more to them.
- When the relay is directly driven by the control output signals, install a diode in parallel with a relay, and in the direction as the Fig. shows. The driver might be damaged without a diode installment, or by reverse direction.
- Frame ground (FG) is connected to the earth terminal inside of the driver.

• For detailed information, refer to Wiring Diagram at each control mode, P.83 (Position control mode), P.127 (Velocity control mode), P.161 (Torque control mode) and P.192 (Full-closed control mode).

• Specifications of the Connector, CN X5

Connector at driver side	Connecter to be prepared by customer		Manufacturer
	Part name	Part No.	
52986-5071	Connecter (soldering type)	54306-5011 or 54306-5019 (lead-free)	Molex Inc.
	Connector cover	54331-0501	
	or		
	Connecter (soldering type)	10150-3000VE	Sumitomo 3M
	Connector cover	10350-52A0-008	

<Note>

For details, refer to P.312, "Options" of Supplement.

<Remarks>

• Tightening torque of the screws for connector (CN X5) for the connection to the host to be 0.3 to 0.35N·m. Larger tightening torque than these may damage the connector at the driver side.

Timing Chart

Timing Chart

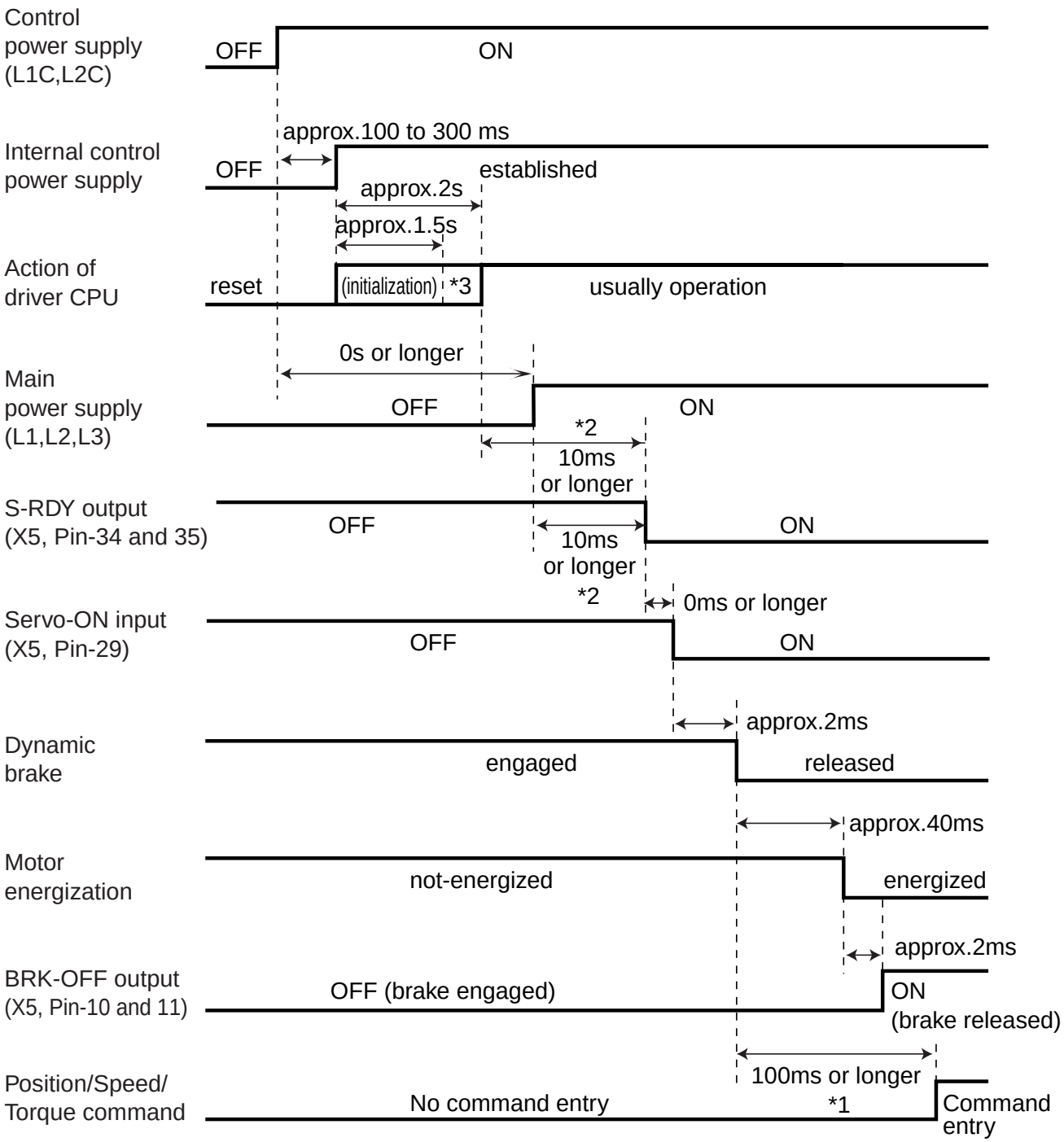

<Cautions>

- The above chart shows the timing from AC power-ON to command input.
- Activate the external command input according to the above timing chart.

*1. In this term Servo-ON input (SRV-ON) turns ON as a hard ware, but operation command can not be received.

*2. S-RDY output will turn on when both conditions are met, initialization of micro computer has been completed and the main power has been turned on.

*3. After Internal control power supply , protective functions are active from approx. 1.5 sec after the start of initializing microcomputer. Please set the signals, especially for protective function, for example over-travel inhibit input (CWL,CCWL) or external scale input, so as to decide their logic until this term.

When an Error (Alarm) Has Occurred (at Servo-ON Command)

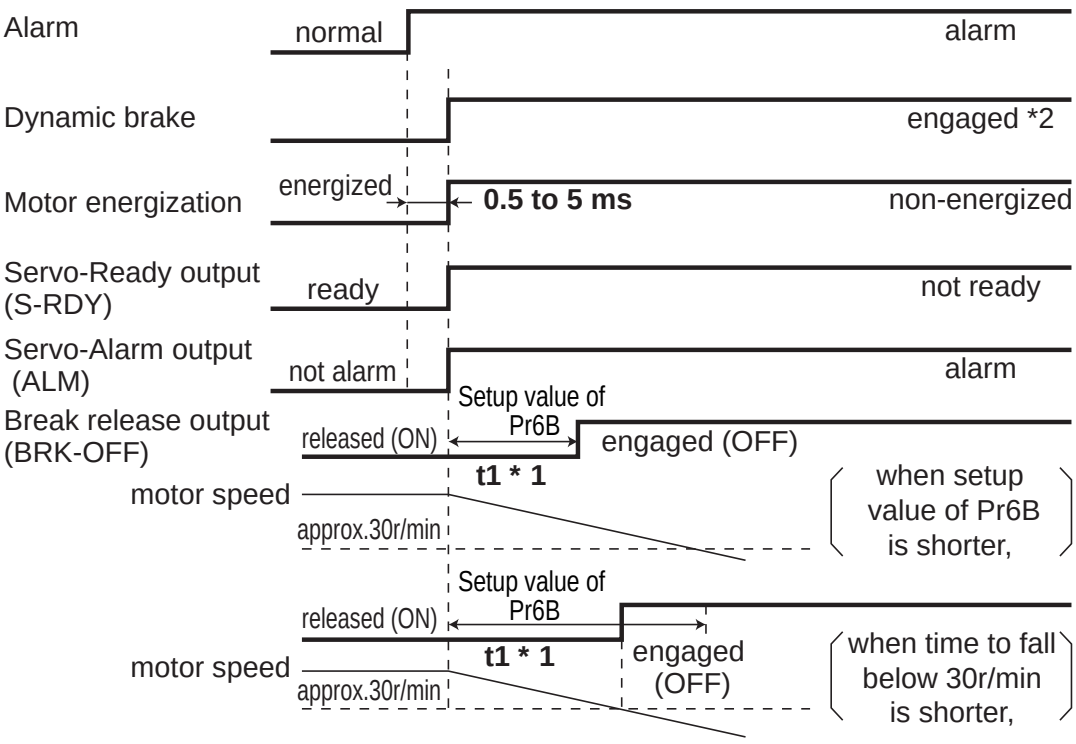

<Cautions>

*1. t1 will be a shorter time of either the setup value of Pr6B or elapsing time for the motor speed to fall below 30r/min.
t1 will be 0 when the motor is in stall regardless of the setup pf Pr6A.

*2. For the action of dynamic brake at alarm occurrence, refer to an explanation of Pr68, "Sequence at alarm ("Parameter setup" at each control mode) as well.

When an Alarm Has Been Cleared (at Servo-ON Command)

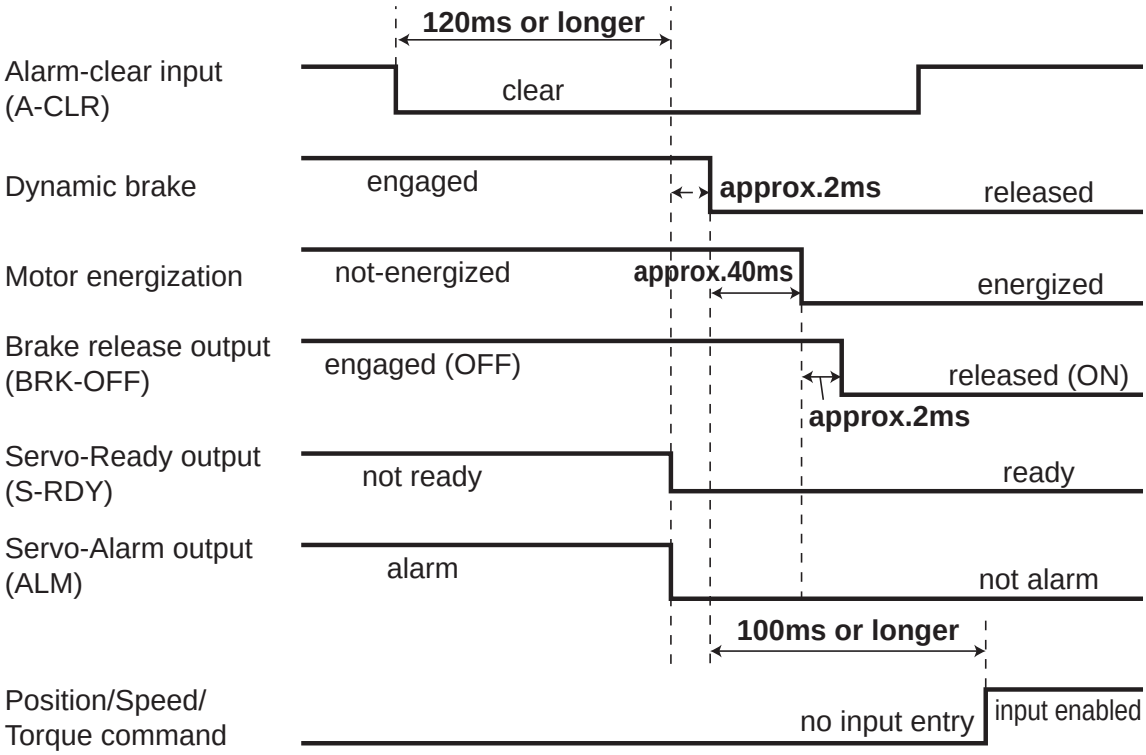

Timing Chart

Servo-ON/OFF Action While the Motor Is at Stall (Servo-Lock)

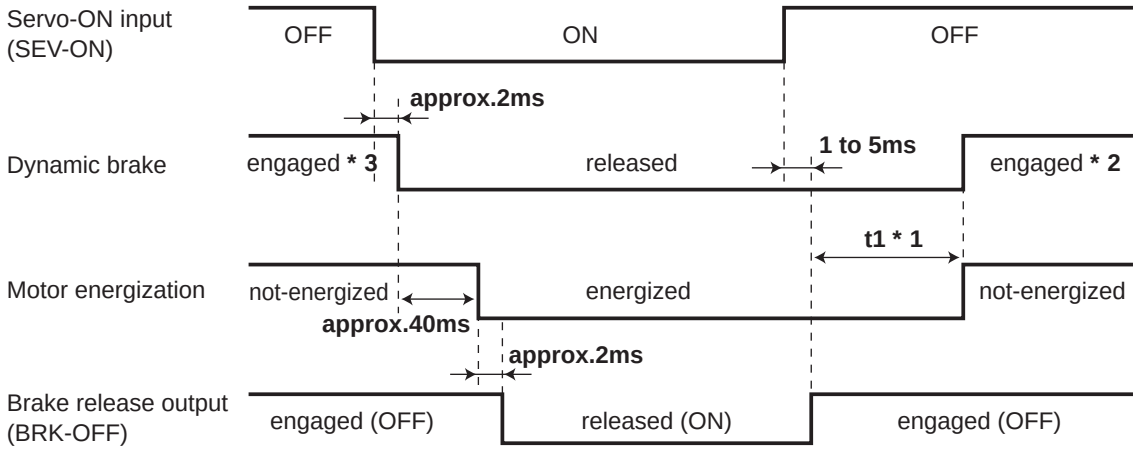

<Cautions>

*1. t1 will be determined by Pr6A setup value.

*2. For the dynamic brake action at Servo-OFF, refer to an explanation of Pr69, "Sequence at Servo-OFF ("Parameter setup" at each control mode) as well.

*3. Servo-ON will not be activated until the motor speed falls below approx. 30r/min.

Servo-ON/OFF Action While the Motor Is in Motion

(Timing at emergency stop or trip. Do not repeat this sequence. During the normal operation, stop the motor, then make Servo-ON/OFF action.)

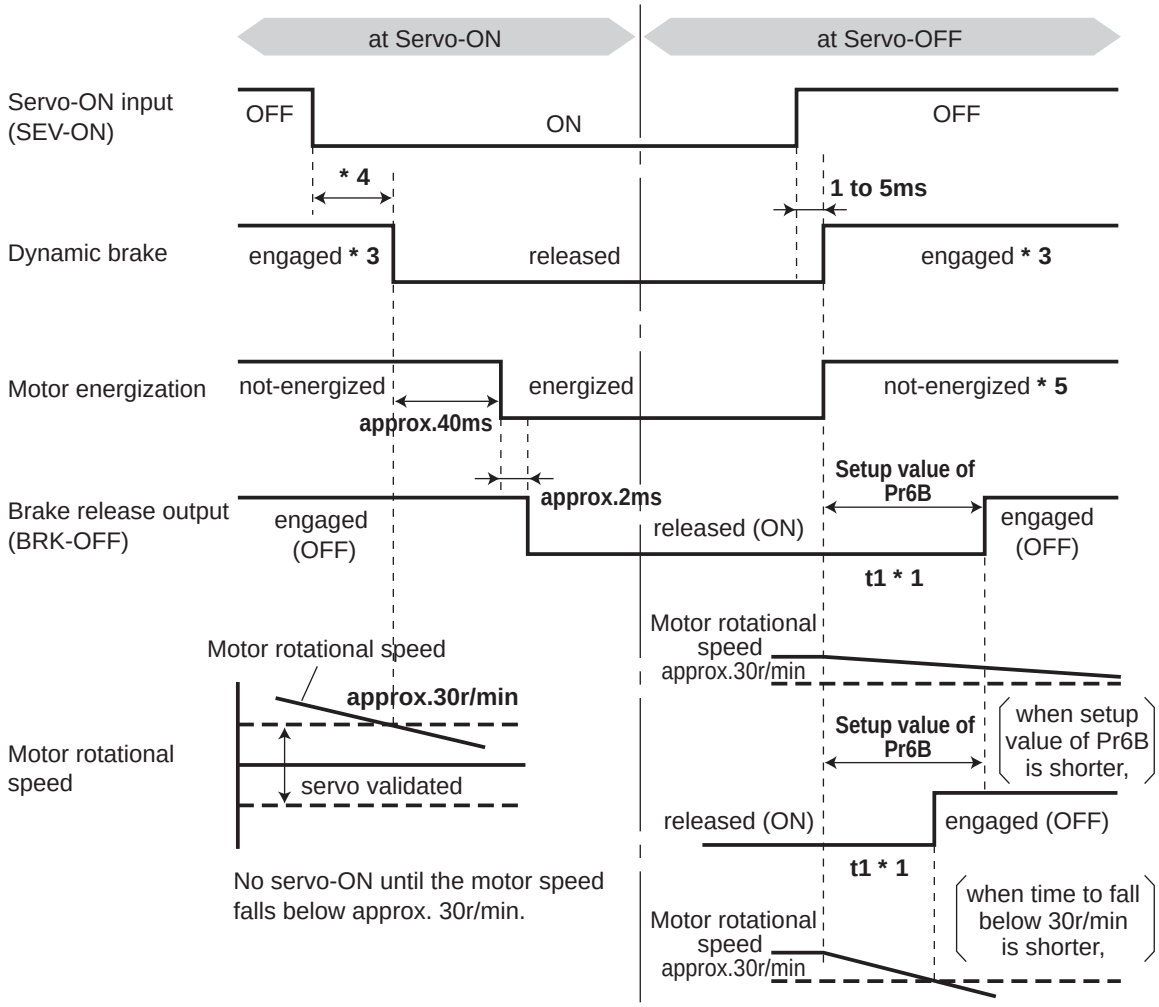

<Cautions>

*1. t1 will be a shorter time of either the setup value of Pr6B or elapsing time for the motor speed to fall below 30r/min.

*2. Even though the SRV-ON signal is turned on again during the motor deceleration, Servo-ON will not be activated until the motor stops.

*3. For the action of dynamic brake at alarm occurrence, refer to an explanation of Pt69, "Sequence at Servo-OFF ("Parameter setup" at each control mode) as well.

*4. Servo-ON will not be activated until the motor speed falls below approx. 30r/min.

*5. For the motor energization during deceleration at Servo-OFF, refer to an explanation of Pr69, "Sequence at Serve-OFF ("Parameter setup" at each control mode) as well.

Built-in Holding Brake

In the applications where the motor drives the vertical axis, this brake would be used to hold and prevent the work (moving load) from falling by gravity while the power to the servo is shut off.

<Caution>

Use this built-in brake for "Holding" purpose only, that is to hold the stalling status. Never use this for "Brake" purpose to stop the load in motion.

Connecting Example

The following shows the example when the brake is controlled by using the brake release output signal (BRK-OFF) of the driver.

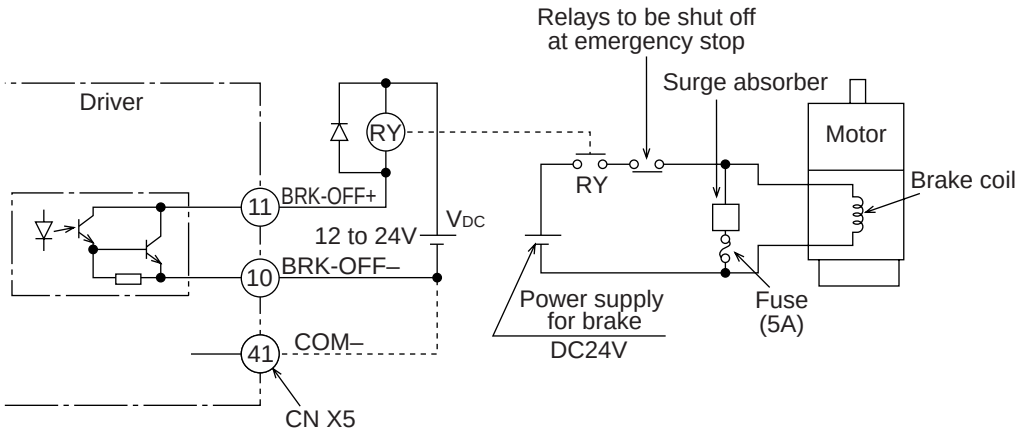

<Notes, Cautions>

1. The brake coil has no polarity.
2. Power supply for the brake to be provided by customer. Do not co-use the power supply for the brake and for the control signals (V_{DC}).
3. Install a surge absorber as the above Fig. shows to suppress surge voltage generated by ON/OFF action of the relay (RY). When you use a diode, note that the time from the brake release to brake engagement is slower than that of the case of using a surge absorber.
4. For a surge absorber, refer to P.323, "Recommended Components"of Supplement.
5. Recommended components are specified to measure the brake releasing time.
   Reactance of the cable varies depending on the cable length, and it might generate surge voltage.
   Select a surge absorber so that relay coil voltage (max. rating : 30V, 50mA) and terminal voltage may not exceed the rating.

Output Timing of BRK-OFF Signal

- For the brake release timing at power-on, or braking timing at Servo-OFF/Servo-Alarm while the motor is in motion, refer to P.42 , "Timing Chart".
- With the parameter, Pr6B (Setup of mechanical brake action while the motor is in motion), you can set up a time between when the motor enters to a free-run from energized status and when BRK-OFF signal turns off (brake will be engaged), when the Servo-OFF or alarm occurs while the motor is in motion.

<Notes>

1. The lining sound of the brake (chattering and etc.) might be generated while running the motor with built-in brake, however this does not affect any functionality.
2. Magnetic flux might be generated through the motor shaft while the brake coil is energized (brake is open). Pay an extra attention when magnetic sensors are used nearby the motor.

Specifications of Built-in Holding Brake

Motor series	Motor output	Static friction torque N·m	Rotor inertia X10⁻⁴ kg·m²	Engaging time ms	Releasing time ms*	Exciting current DC A (at cool-off)	Releasing voltage	Permissible work (J) per one braking	Permissible total work x 10³J
MSMD MAMA	50W, 100W	0.29 or more	0.002	35 or less	10 or less	0.25	DC2V or more	39.2	4.9
	200W, 400W	1.27 or more	0.018	50 or less		0.30		137	44.1
	750W	2.45 or more	0.075	70 or less	20 or less	0.35		196	147
MQMA	100W	0.29 or more	0.03	50 or less	15 or less	0.29	DC1V or more	137	44.1
	200W, 400W	1.27 or more	0.09	60 or less		0.41		196	147
MSMA	1.0kW	4.9 or more	0.25	50 or less	15 or less (100)	0.74	DC2V or more	392	196
	1.5kW, 2.0kW	7.8 or more	0.33			0.81			490
	3.0kW	11.8 or more		80 or less					
	4.0kW, 5.0kW	16.1 or more	1.35	110 or less	50 or less (130)	0.90		1470	2156
MDMA	1.0kW	4.9 or more	1.35	80 or less	70 or less (200)	0.59		588	780
	1.5kW, 2.0kW	13.7 or more		100 or less	50 or less (130)	0.79		1176	1470
	3.0kW	16.1 or more		110 or less		0.90		1470	2156
	4.0kW	21.5 or more	4.25	90 or less	35 or less (150)	1.10		1078	2450
	5.0kW	24.5 or more	4.7	80 or less	25 or less (200)	1.30		1372	2940
MHMA	500W, 1.0kW	4.9 or more	1.35		70 or less (200)	0.59		588	784
	1.5kW	13.7 or more		100 or less	50 or less (130)	0.79		1176	1470
	2.0kW to 5.0kW	24.5 or more	4.7	80 or less	25 or less (200)	1.30		1372	2940
MFMA	400W	4.9 or more	1.35		70 or less (200)	0.59		588	784
	1.5kW	7.8 or more	4.7		35 or less (150)	0.83		1372	2940
	2.5kW	21.6 or more	8.75	150 or less	100 or less (450)	0.75		1470	1470
	4.5kW	31.4 or more							2156
MGMA	900W	13.7 or more	1.35	100 or less	50 or less (130)	0.79		1176	1470
	2.0kW	24.5 or more	4.7	80 or less	25 or less (200)	1.3		1372	2940
	3.0kW, 4.5kW	58.8 or more		150 or less	50 or less (130)	1.4			

- Excitation voltage is DC24±10%.
- * Values represent the ones with DC-cutoff using a surge absorber for holding brake.
  Values in ( ) represent those measured by using a diode (V03C by Renesas Technology Corp.)
- Above values (except static friction torque, releasing voltage and excitation current) represent typical values.
- Backlash of the built-in holding brake is kept ±1° or smaller at ex-factory point.
- Permissible angular acceleration : 30000rad/s² for MAMA series
  10000rad/s² for MSMD, MQMA, MSMA, MDMA, MHMA, MFMA and MGMA series
- Service life of the number of acceleration/deceleration with the above permissible angular acceleration is more than 10 million times.
  (Life end is defined as when the brake backlash drastically changes.)

Dynamic Brake

This driver is equipped with a dynamic brake for emergency stop.
Pay a special attention to the followings.

<Caution>

1. Dynamic brake is only for emergency stop.

**Do not start/stop the motor by turning on/off the Servo-ON signal (SRV-ON).
Or it may damage the dynamic brake circuit of the driver.**

The motor becomes a dynamo when driven externally, and shorting current runs while this dynamic brake is activated and might cause smoking or fire.

2. Dynamic brake is a short-duration rating, and designed for only emergency stop. Allow approx. 3 minutes pause when the dynamic brake is activated during high-speed running.
   (Over-current protection (error code No. 14) may be activated when the dynamic brake circuit inside the F-frame amplifier has overheated.)

• You can activate the dynamic brake in the following cases.
  1) When the main power is turned off
  2) At Servo-OFF
  3) When one of the protective function is activated.
  4) When over-travel inhibit input (CWL, CCWL) of CN X5 is activated
     In the above cases from 1) to 4), you can select either activation of the dynamic brake or making the motor free-run during deceleration or after the stop, with parameter.
     Note that when the control power is off, the dynamic brake will be kept activated.

1) Setup of driving condition from deceleration to after stop by main power-off (Pr67)

Sequence at main power-off (Pr67) Setup value of Pr67	Driving condition: during deceleration	Driving condition: after stalling	Contents of deviation counter
0	D B	D B	Clear
1	Free-run	D B	Clear
2	D B	Free-run	Clear
3	Free-run	Free-run	Clear
4	D B	D B	Hold
5	Free-run	D B	Hold
6	D B	Free-run	Hold
7	Free-run	Free-run	Hold
8	Emergency stop	D B	Clear
9	Emergency stop	Free-run	Clear

Torque limit value at emergency stop will be that of Pr6E (Setup of torque at emergency stop) when the setup value is 8 or 9.

2) Setup of driving condition from deceleration to after stop by Servo-OFF (Pr69)

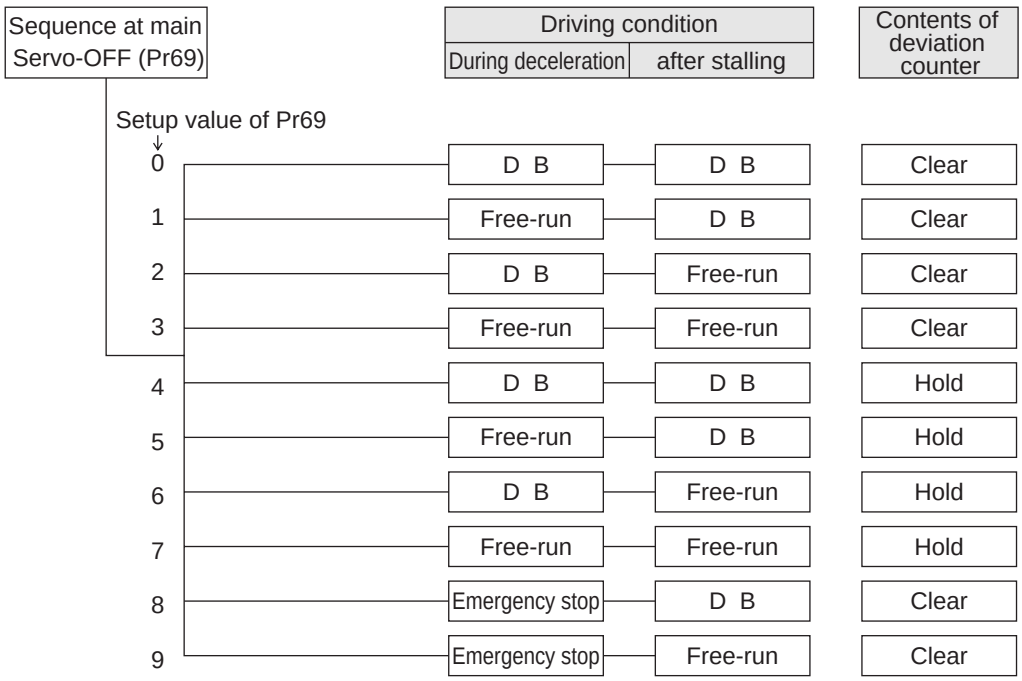

Torque limit value at emergency stop will be that of Pr6E (Setup of torque at emergency stop) when the setup value is 8 or 9.

3) Setup of driving condition from deceleration to after stop by activation of protective function (Pr68)

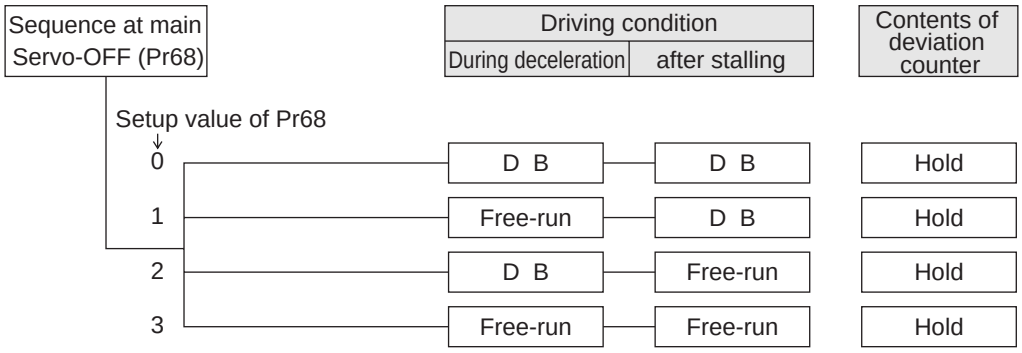

Deviation counter at activation of protective function will be cleared at alarm-clear.

4) Setup of driving condition from deceleration to after stop by validation of over-travel inhibit input (Pr66)

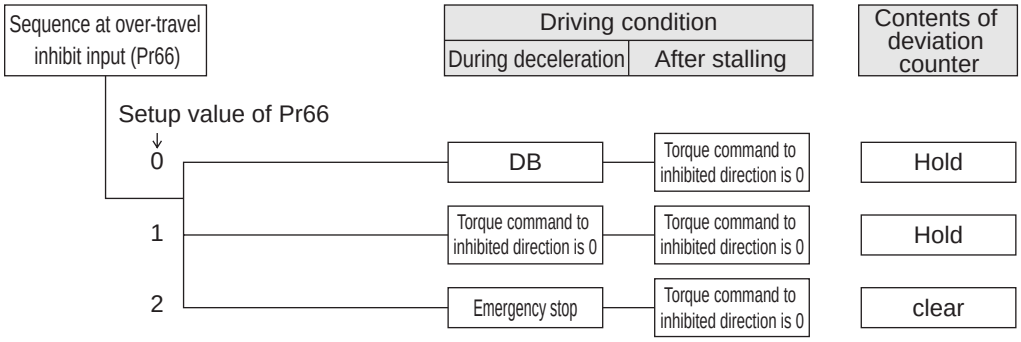

Torque limit value during deceleration will be that of Pr6E (Setup of torque at emergency stop) when the setup value is 2.
Changes will be validated after the control power is turned on.

Caution on Homing Operation

- In homing action by using the host controller, stop position might not be stabilized if the origin input (Z-phase of the encoder) is entered while the motor is not decelerated enough after the proximity input is turned on. Set up the ON-positions of proximity input and the position of origin point, considering the necessary pulse counts for deceleration. Take the positioning action and homing action into account when you set put acceleration/deceleration time with parameter, since this affect these action as well.
  For the details of homing, observe the instruction manual of the host controller.

Example of Homing Action

Proximity dog on... .Decelerates at an entry of the proximity input, and stops at an entry of the first origin input (Z-phase)

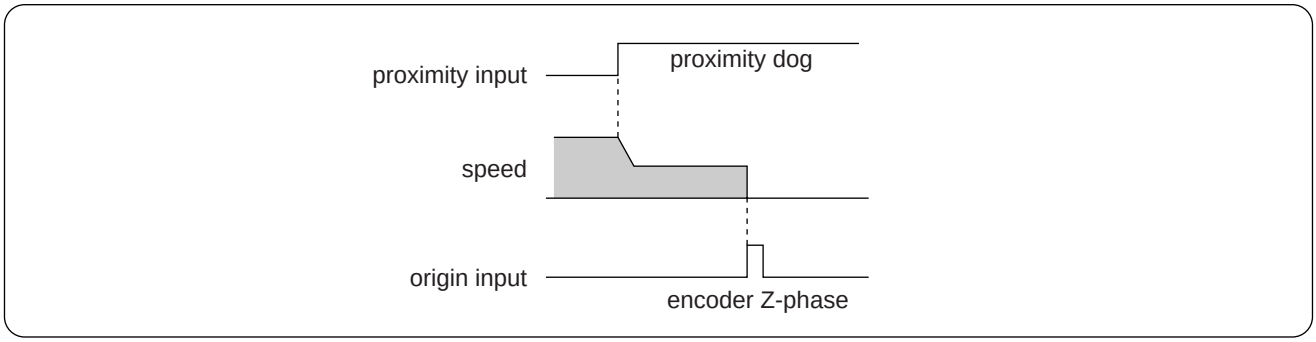

Proximity dog off... .Decelerates at an entry of the proximity input, and stops at an entry of the first origin input (Z-phase) after the input is tuned off

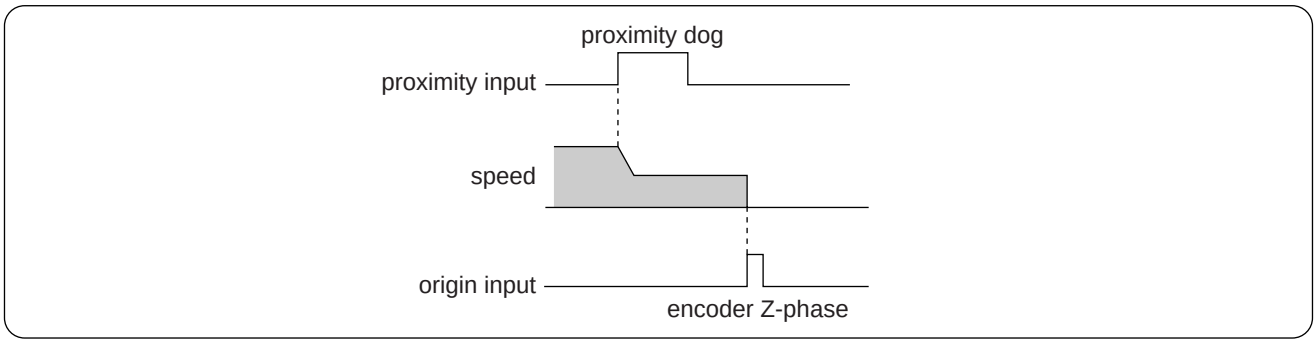

Outline of Parameter

This driver is equipped with various parameters to set up its characteristics and functions. This section describes the function and purpose of each parameter. Read and comprehend very well so that you can adjust this driver in optimum condition for your running requirements.

How to Set

- You can refer and set up the parameter with either one of the following.
  1) Front panel of the driver
  2) Combination of the setup support software, "PANATERM®" (Option, DV0P4460: English/Japanese version) and PC.
  3) Console (DV0P4420, option)

<Note>

For setup of the parameters on PC screen, refer to the instruction manual of the "PANATERM®".

How to Connect

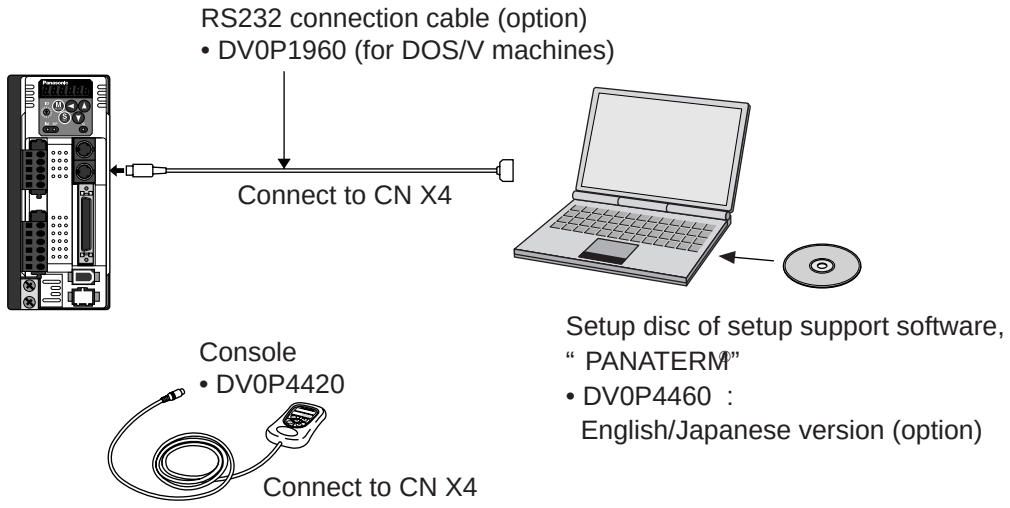

<Remarks>

- Connect the console connector to the connector, CN X4 of the driver securely.
- Do not pull the cable to insert/unplug.

Setup of Parameter and Mode

Composition and List of Parameters

Group	Parameter No. (Pr□□)	Outline
Functional selection	00 to 0F	You can select a control mode, designate I/O signals and set up a baud rate.
Adjustment	10 to 1F, 27 to 2E	You can set up servo gains (1st and 2nd) of position, velocity, integration, etc, and time constants of various filters.
	20 to 26, 2F	Parameters related to Real Time Auto-Gain Tuning. You can set up a mode and select a mechanical stiffness.
	30 to 3F	You can set up parameters related to gain switching(1st ⟷ 2nd)
Position (Step) Control	40 to 4F	You can set up an input form, directional selection of command pulses, dividing of encoder output pulse and set up a division multiplier ratio of command pulse.
Velocity Control, Torque Control	50 to 5A, 74 to 77	You can set up an input gain of command pulse, reverse polarity and adjust offset. You can also set up internal speeds (1 to 8th speed), acceleration/deceleration time.
	5B to 5F	You can set an input gain, reverse polarity and set up a torque limit of torque command.
Sequence	60 to 6F	You can set up detecting conditions of output signals, such as positioning-complete and zero-speed. You can also set up a deceleration/stop action at main power-off, at alarm output and at servo-off, and clear condition of the deviation counter.
	70 to 73	You can set up actions of protective functions.
Full-Closed Control	78 to 7F	You can set up dividing of external scale.

For details, refer to "Parameter Setup" of each control mode.

• In this document, following symbols represent each mode.

Symbol	Control mode	Setup value of Pr02
P	Position control	0
S	Velocity control	1
T	Torque control	2
F	Full-Closed control	6

Symbol	Control mode	Setup value of Pr02
P/S	Position (1st)/Velocity (2nd) control	3*
P/T	Position (1st)/Torque (2nd) control	4*
S/T	Velocity (1st)/Torque (2nd) control	5*

* When you select the combination mode of 3, 4 or 5, you can select either 1st or 2nd with control mode switching input (C-MODE).
When C-MODE is open : 1st mode selection
When C-Mode is closed : 2nd mode selection
Do not enter the command 10ms before/after the switching.

Parameters for Functional Selection

Parameter No. (Pr□□)	Set up of parameter	Range	Default	Unit	Related Control Mode
00 *1	Address of axis	0 to 15	1	–	all
01 *1	Initial display of LED	0 to 17	1	–	all
02 *1	Setup of control mode	0 to 6	1	–	all
03	Selection of torque limit	0 to 3	1	–	P, S, F
04 *1	Setup of over-travel inhibit input	0 to 2	1	–	all
05	Switching of Internal/External speed setup	0 to 3	0	–	S
06	Selection of ZEROSPD input	0 to 2	0	–	S, T
07	Selection of speed monitor (SP)	0 to 9	3	–	all
08	Selection of torque monitor (IM)	0 to 12	0	–	all
09	Selection of TLO output	0 to 8	0	–	all
0A	Selection of ZSP output	0 to 8	1	–	all
0B *1	Setup of absolute encoder	0 to 2	1	–	all
0C *1	Baud rate setup of RS232	0 to 5	2	–	all
0D *1	Baud rate setup of RS485	0 to 5	2	–	all
0E *1	Setup of front panel lock	0 to 1	0	–	all
0F	(For manufacturer's use)	–	–	–	–

• For parameters with suffix of "*1", change will be validated after the reset of the control power.

Parameters for Adjustment of Time Constant for Gains and Filters

Parameter No. (Pr□□)	Set up of parameter	Range	Default		Unit	Related Control Mode
			A to C-frame	D to F-frame		
10	1st gain of position loop	0 to 3000	<63>	<32>	1/s	P, F
11	1st gain of velocity loop	1 to 3500	<35>	<18>	Hz	all
12	1st time constant of velocity loop integration	1 to 1000	<16>	<31>	ms	all
13	1st filter of velocity detection	0 to 5	<0>		–	all
14	1st time constant of torque filter	0 to 2500	<65>	<126>	0.01ms	all
15	Velocity feed forward	–2000 to 2000	<300>		0.1%	P, F
16	Time constant of feed forward filter	0 to 6400	<50>		0.01ms	P, F
17	(For manufacturer's use)	–	–		–	–
18	2nd gain of position loop	0 to 3000	<73>	<38>	1/s	P, F
19	2nd gain of velocity loop	1 to 3500	<35>	<18>	Hz	all
1A	2nd Time constant of velocity loop integration	1 to 1000	<1000>		ms	all
1B	2nd filter of velocity detection	0 to 5	<0>		–	all
1C	2nd torque filter time constant	0 to 2500	<65>	<126>	0.01ms	all
1D	1st notch frequency	100 to 1500	1500		Hz	all
1E	Selection of 1st notch width	0 to 4	2		–	all
1F	(For manufacturer's use)	–	–		–	–
27	Setup of instantaneous velocity observer	0 to 1	<0>		–	P, S
28	2nd notch frequency	100 to 1500	1500		Hz	all
29	Selection of 2nd notch width	0 to 4	2		–	all
2A	Selection of 2nd notch depth	0 to 99	0		–	all
2B	1st damping frequency	0 to 2000	0		0.1Hz	P, F
2C	Setup of 1st damping filter	–200 to 2000	0		–	P, F
2D	2nd damping frequency	0 to 2000	0		0.1Hz	P, F
2E	Setup of 2nd damping filter	–200 to 2000	0		–	P, F

• For parameters which default values are parenthesized by "< >", default value varies automatically by the real-time auto-gain tuning function. Set up Pr21 (Setup of Real-time auto-gain tuning mode) to 0 (invalid) when you want to adjust manually.

Setup of Parameter and Mode

Parameters for Auto-Gain Tuning

Parameter No. (Pr□□)	Set up of parameter	Range	Default		Unit	Related Control Mode
			A to C-frame	D to F-frame		
20	Inertia ratio	0 to 10000	<250>		%	All
21	Setup of real-time auto-gain tuning mode	0 to 7	1		–	All
22	Mechanical stiffness at real-time auto-gain tuning	0 to 15	4	1	–	All
23	Setup of adaptive filter mode	0 to 2	1		–	P, S, F
24	Selection of damping filter switching	0 to 2	0		–	P, F
25	Setup of action at normal mode auto-gain tuning	0 to 7	0		–	All
26	Setup of software limit	0 to 1000	10		0.1rev	P, F
2F *3	Adaptive filter frequency	0 to 64	0		–	P, S, F

*3 this parameter will be automatically set up when the adaptive filter is validated (Pr23, " Setup of adaptive filter mode" is " 1" , and you cannot set this up at your discretion. Set up Pr23, " Setup of adaptive filter mode" to " 0" (invalid) to clear this parameter.

Parameters for Adjustment (2nd Gain Switching Function)

Parameter No. (Pr□□)	Set up of parameter	Range	Default	Unit	Related Control Mode
30	Setup of 2nd gain	0 to 1	<1>	–	All
31	1st mode of control switching	0 to 10	<0>	–	All
32	1st delay time of control switching	0 to 10000	<30>	166μS	All
33	1st level of control switching	0 to 20000	<50>	–	All
34	1st hysteresis of control switching	0 to 20000	<33>	–	All
35	Time for position gain switching	0 to 10000	<20>	(1+setup value) x 166μs	P, F
36	2nd mode of control switching	0 to 5	<0>	–	S, T
37	2nd delay time of control switching	0 to 10000	0	166μS	S, T
38	2nd level of control switching	0 to 20000	0	–	S, T
39	2nd hysteresis of control switching	0 to 20000	0	–	S, T
3A	(For manufacturer's use)	–	–	–	–
3B	(For manufacturer's use)	–	–	–	–
3C	(For manufacturer's use)	–	–	–	–
3D	Setup of JOG speed	0 to 500	300	r/min	All
3E	(For manufacturer's use)	–	–	–	–
3F	(For manufacturer's use)	–	–	–	–

• For parameters which default values are parenthesized by "< >", default value varies automatically by the real-time auto-gain tuning function. Set up Pr21 (Setup of Real-time auto-gain tuning mode) to 0 (invalid) when you want to adjust manually.

*** In this documentation, each mode is represented by the following symbols**

P : Position control, S : Velocity control, T : Torque control, F : Full-closed control, P/S : Position (1st),/ Velocity (2nd) control, P/T : Position (1st)/Torque (2nd) control, S/T : Velocity (1st)/Torque (2nd) control

Parameters for Position Control

Parameter No. (Pr□□)	Set up of parameter	Range	Default	Unit	Related Control Mode
40*1	Selection of command pulse input	0 to 1	0	–	P, F
41*1	setup of rotational direction of command pulse	0 to 1	0	–	P, F
42*1	setup of command pulse input mode	0 to 3	1	–	P, F
43	Canceling of command pulse prohibition input	0 to 1	1	–	P, F
44*1	Numerator of pulse output division	1 to 32767	2500	–	all
45*1	Denominator of pulse output division	0 to 32767	0	–	all
46*1	Logic reversal of pulse output	0 to 3	0	–	all
47*1	Setup of Z-phase of external scale	0 to 32767	0	–	F
48	1st numerator of electronic gear	0 to 10000	0	–	P, F
49	2nd numerator of electronic gear	0 to 10000	0	–	P, F
4A	Multiplier for numerator of electronic gear	0 to 17	0	–	P, F
4B	Denominator of electronic gear	1 to 10000	10000	–	P, F
4C	Setup of smoothing filter for primary delay	0 to 7	1	–	P, F
4D*1	Setup of FIR smoothing	0 to 31	0	–	P, F
4E	Counter clear input mode	0 to 2	1	–	P, F
4F	(For manufacturer's use)	–	–	–	–

• For parameters with suffix of "*1", change will be validated after the reset of the control power.

Parameters for Velocity/Torque control

Parameter No. (Pr□□)	Set up of parameter	Range	Default	Unit	Related Control Mode
50	Input gain of speed command	10 to 2000	500	(r/min)/V	S, T
51	Input reversal of speed command	0 to 1	1	–	S
52	Offset of speed command	–2047 to 2047	0	0.3mV	S, T
53	1st speed of speed setup	–20000 to 20000	0	r/min	S
54	2nd speed of speed setup	–20000 to 20000	0	r/min	S
55	3rd speed of speed setup	–20000 to 20000	0	r/min	S
56	4th speed of speed setup	–20000 to 20000	0	r/min	S, T
74	5th speed of speed setup	–20000 to 20000	0	r/min	S
75	6th speed of speed setup	–20000 to 20000	0	r/min	S
76	7th speed of speed setup	–20000 to 20000	0	r/min	S
77	8th speed of speed setup	–20000 to 20000	0	r/min	S
57	Setup of speed command filter	0 to 6400	0	0.01ms	S, T
58	Setup of acceleration time	0 to 5000	0	2ms/(1000r/min)	S
59	Setup of deceleration time	0 to 5000	0	2ms/(1000r/min)	S
5A	Setup of sigmoid acceleration/deceleration time	0 to 500	0	2ms	S
5B	Selection of torque command	0 to 1	0	–	T
5C	Input gain of torque command	10 to 100	30	0.1V/rated torque	T
5D	Input reversal of torque command	0 to 1	0	–	T
5E	Setup of 1st torque limit	0 to 500	<500>*2	%	all
5F	Setup of 2nd torque limit	0 to 500	<500>*2	%	P, S, F

*2 Defaults of Pr5E and Pr5F vary depending on the combination of the driver and the motor.
Refer to P.57, "Setup of Torque Limit".

Setup of Parameter and Mode

Parameters for Sequence

Parameter No. (Pr□□)	Set up of parameter	Range	Default	Unit	Related Control Mode
60	In-position (positioning complete) range	0 to 32767	131	Pulse	P, F
61	Zero speed	10 to 20000	50	r/min	all
62	At-speed (arrived speed)	10 to 20000	1000	r/min	S, T
63	Setup of in-position output	0 to 3	0	–	P, F
64	(For manufacturer's use)	–	–	–	–
65	Selection of LV-trip at main power off	0 to 1	1	–	all
66*1	Sequence at run-prohibition	0 to 2	0	–	all
67	Sequence at main power off	0 to 9	0	–	all
68	Sequence at alarm	0 to 3	0	–	all
69	Sequence at servo-off	0 to 9	0	–	all
6A	Setup of mechanical brake action at stall	0 to 100	0	2ms	all
6B	Setup of mechanical brake action in motion	0 to 100	0	2ms	all
6C*1	Selection of external regenerative resister	0 to 3	A, B-frame : 3, C,D,E-frame : 0	–	all
6D*1	Detection time of main power shut-off	35 to 1000	35	2ms	all
6E	Setup to torque at emergency stop	0 to 500	0	%	all
6F	(For manufacturer's use)	–	–	–	–
70	Excess setup of positional deviation	0 to 32767	25000	256Pulse	P, F
71	Excess setup of analog input	0 to 100	0	0.1V	S, T
72	Setup of over-load level	0 to 500	0	%	all
73	Setup of over-speed level	0 to 20000	0	r/min	all

Parameters for Full-Closed Control

Parameter No. (Pr□□)	Set up of parameter	Range	Default	Unit	Related Control Mode
78*1	Numerator of external scale division	0 to 32767	0	–	F
79*1	Numerator multiplier of external scale division	0 to 17	0	–	F
7A*1	Denominator of external scale division	1 to 32767	10000	–	F
7B*1	Excess setup of hybrid deviation	1 to 10000	100	16X external scale pulses	F
7C*1	Reversal of direction of external scale	0 to 1	0	–	F
7D	(For manufacturer's use)	–	–	–	–
7E	(For manufacturer's use)	–	–	–	–
7F	(For manufacturer's use)	–	–	–	–

• For parameters with suffix of "*1", change will be validated after the reset of the control power.

*** In this documentation, each mode is represented by the following symbols**

P : Position control, S : Velocity control, T : Torque control, F : Full-closed control, P/S : Position (1st),/ Velocity (2nd) control, P/T : Position (1st)/Torque (2nd) control, S/T : Velocity (1st)/Torque (2nd) control

Setup of Torque Limit

Torque limit setup range is 0 to 300 and default is 300 except the combinations of the motor and the driver listed in the table below.

Frame	Model No.	Applicable motor	Max. value of torque limit
A-frame	MADDT1207	MAMA012P1*	500
		MAMA012S1*	500
B-frame	MBDDT2210	MAMA022P1*	500
		MAMA022S1*	500
C-frame	MCDDT3520	MAMA042P1*	500
		MAMA042S1*	500
		MHMA052P1*	255
		MHMA052S1*	255

Frame	Model No.	Applicable motor	Max. value of torque limit
D-frame	MDDDT5540	MGMA092P1*	225
		MGMA092S1*	225
		MAMA082P1*	500
		MAMA082S1*	500
F-frame	MFDDTA390	MGMA202P1*	230
		MGMA202S1*	230
	MFDDTB3A2	MGMA302P1*	235
		MGMA302S1*	235
		MGMA452P1*	255
		MGMA452S1*	255

- The above limit applies to Pr5E, 1st torque limit setup, Pr5F, 2nd torque limit setup and Pr6E, Torque setup at emergency stop.

<Caution>

When you change the motor model, above max. value may change as well. Check and reset the setup values of Pr5E, Pr5F and Pr6E.

Cautions on Replacing the Motor

As stated above, torque limit setup range might change when you replace the combination of the motor and the driver. Pay attention to the followings.

1.When the motor torque is limited,

When you replace the motor series or to the different wattage motor, you need to reset the torque limit setup because the rated toque of the motor is different from the previous motor. (see e.g.1)

e.g.1)

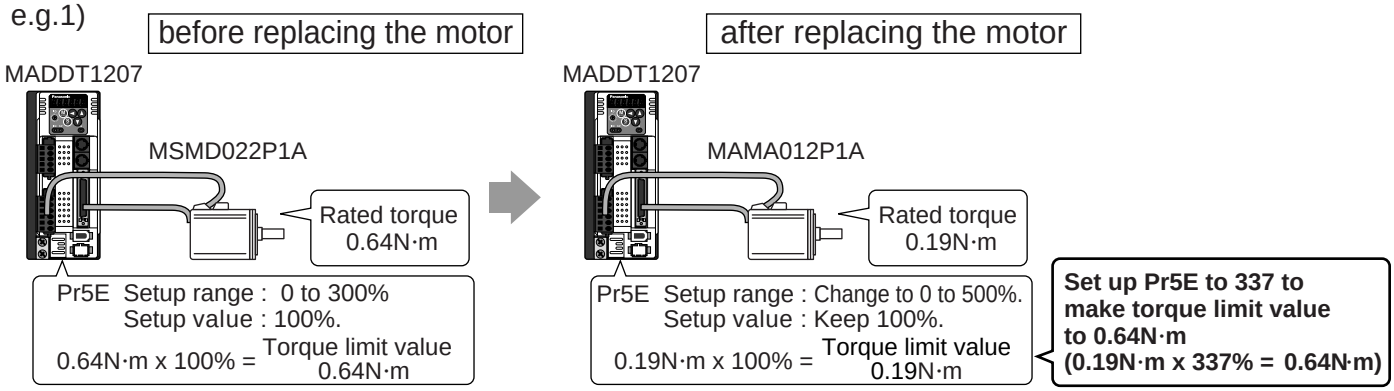

2.When you want to obtain the max. motor torque,

You need to reset the torque limiting setup to the upper limit, because the upper limit value might be different from the previous motor. (see e.g.2)

e.g.2)

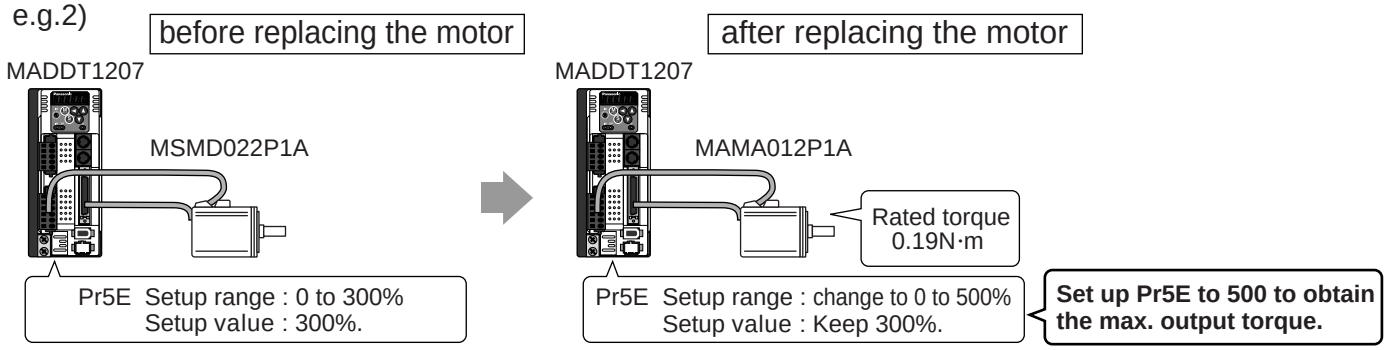

How to Use the Front Panel and Console

Setup with the Front Panel

Composition of Touch Panel and Display

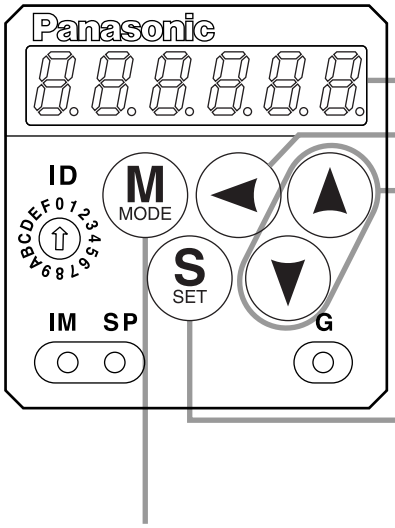

Display LED (6-digit)
All of LED will flash when error occurs,
and switch to error display screen.
All of LED will flash slowly when warning occurs.

Shifting of the digit for data changing to higher digit.
(Valid to the digit whose decimal point flashes.)

Press these to change display and data, select parameters and execute actions.
(Change/Selection/Execution is valid to the digit which decimal point flashes.)
Numerical value increases by pressing , (▲),
decreases by pressing (▼).

SET Button (valid at any time)
Press this to switch SELECTION and EXECUTTION display.

Mode switching button (valid at SELECTION display)
Press this to switch 5 kinds of mode.

1) Monitor Mode
2) Parameter Set up Mode
3) EEPROM Write Mode
4) Auto-Gain Tuning Mode
5) Auxiliary Function Mode

Setup with the Console

Composition of Touch Panel and Display

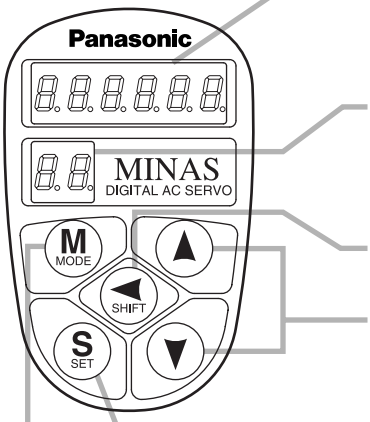

Display LED (6-digit)
All of LED will flash when error occurs, and switch to error display screen.

Displays ID No. (address) of selected driver (in 2 digits).
The value set in Pr00(address) is ID No. Parameter No. is displayed (2 digits) at parameter setup mode.

Press this to shift the digit for data change.

Press these to change data or execute selected action of parameter.
Numerical value increases by pressing , (▲),
decreases by pressing (▼).

SET Button
Press this to shift each mode which is selected by mode switching button to EXECUTION display.

Mode Switching Button Press this to switch 6 kinds of mode.

1) Monitor mode
2) Parameter setup mode
3) EEPROM write mode
4) Normal auto-gain tuning mode
5) Auxiliary function mode
6) Copy mode

Initial Status of the Front Panel Display (7 Segment LED)

Front panel display shows the following after turning on the power of the driver.

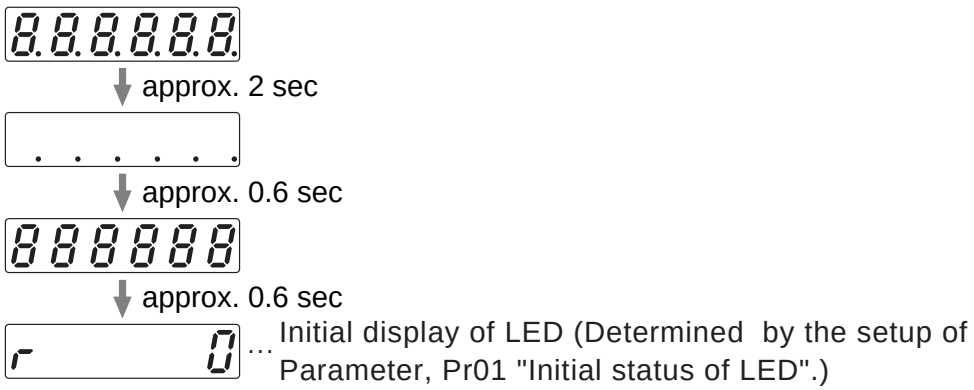

Initial Status of the Console Display (7 Segment LED)

Turn on the power of the driver while inserting the console connector to the driver main body, or inserting the console connector to CN X4 connector.

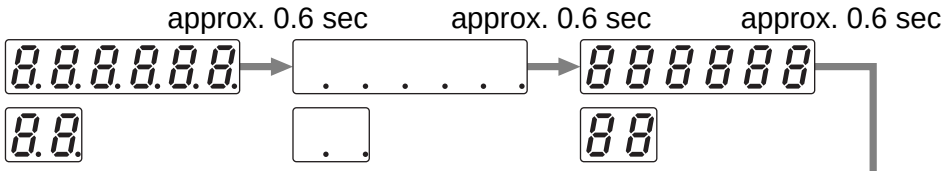

When ID No. of the driver is other than "0"

• In case of communication with RS232 only

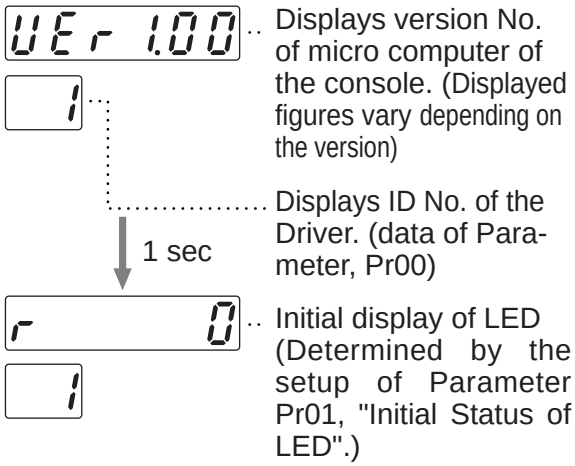

• Release of RS232 communication error

When RS232 communication error occurs as the Fig, below shows, release it by pressing (S SET) and (◀ SHIFT) at the same time.

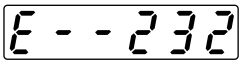

When ID No. of the driver is "0"

• In case of communication with other drivers which are connected via RS485

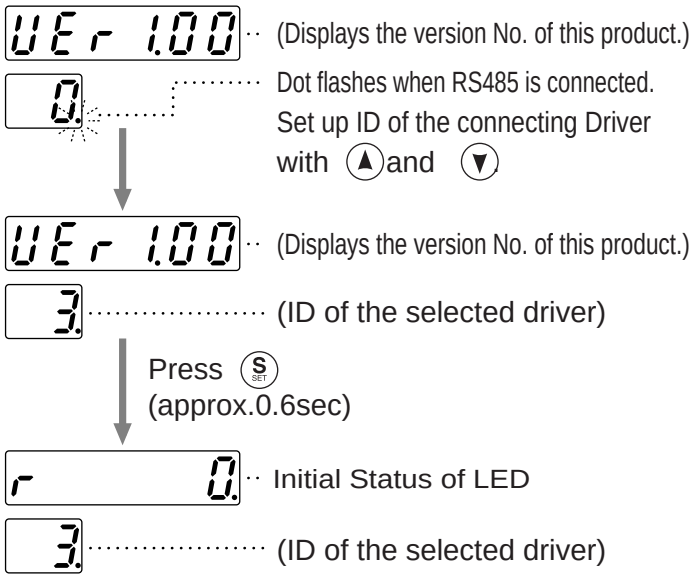

• Release of RS485 communication error

When RS485 communication error occurs as the Fig, below shows, release it by pressing (S SET) and (◀ SHIFT) at the same time.

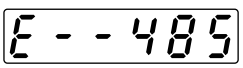

How to Use the Front Panel and Console

Structure of Each Mode

Use each button on the touch panel to select the structure and switch the mode.

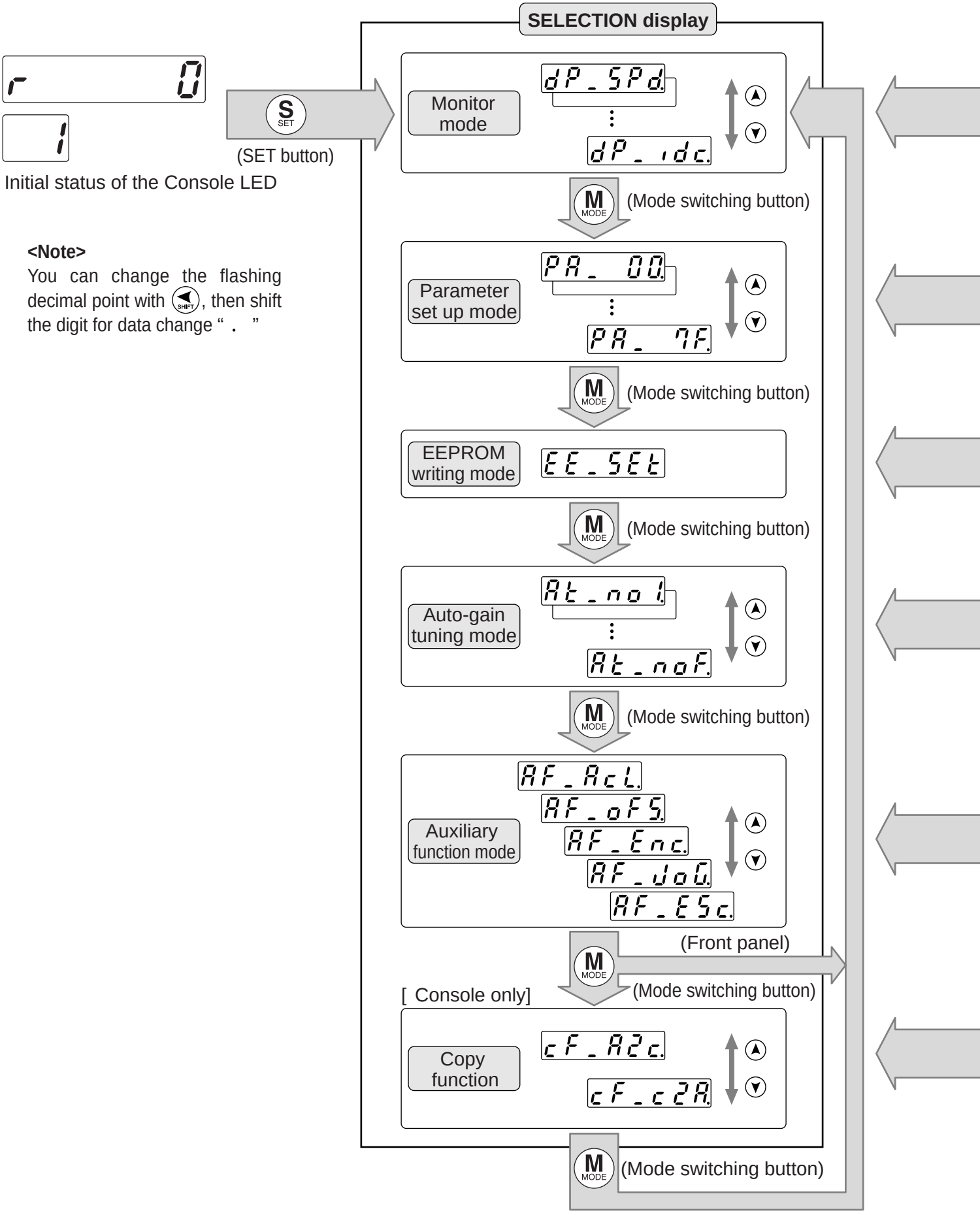

<Note>

You can change the flashing decimal point with (SHIFT), then shift the digit for data change " . "

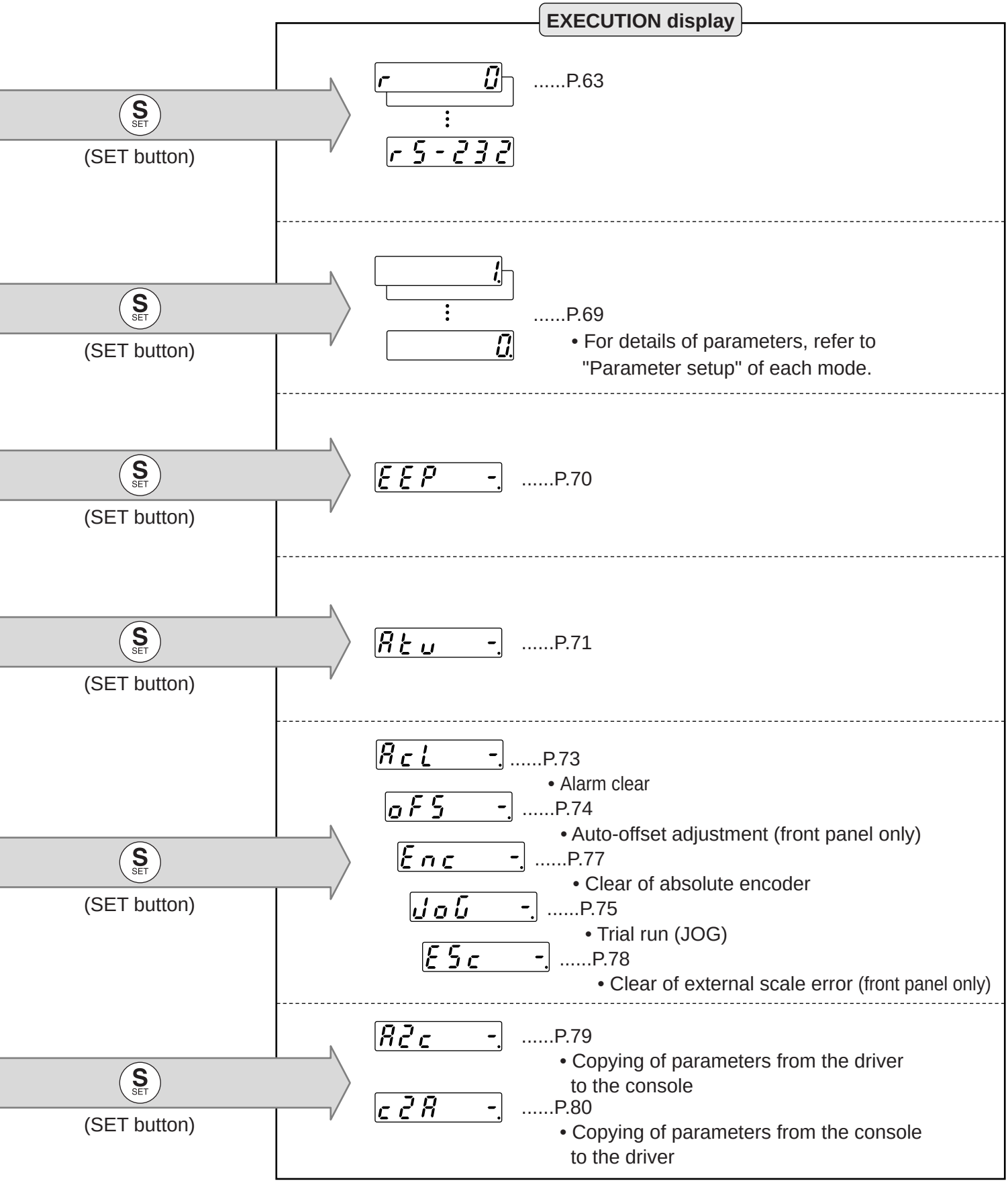
EXECUTION display
(SET button)
r 0
rS-232
.....P.63
(SET button)
1.
0.
.....P.69
• For details of parameters, refer to "Parameter setup" of each mode.
(SET button)
EEP -.
.....P.70
(SET button)
Atu -.
.....P.71
(SET button)
AcL -.
.....P.73
• Alarm clear
oFS -.
.....P.74
• Auto-offset adjustment (front panel only)
Enc -.
.....P.77
• Clear of absolute encoder
JoG -.
.....P.75
• Trial run (JOG)
ESc -.
.....P.78
• Clear of external scale error (front panel only)
(SET button)
A2c -.
.....P.79
• Copying of parameters from the driver to the console
c2A -.
.....P.80
• Copying of parameters from the console to the driver
(SET button)

How to Use the Front Panel and Console

How to Set

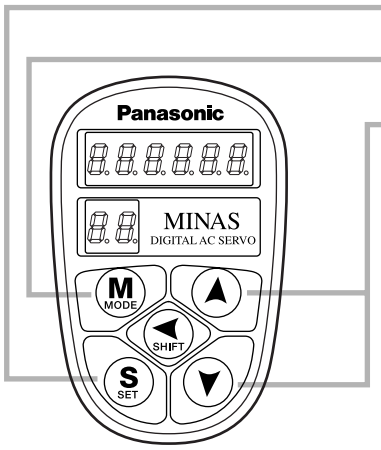

1) Insert the console connector to CN X6 of the driver, and turn on the power of the driver. → r 0

Parameter setup

2) Press (S SET). → dP_SPd

3) Press (M MODE). → PA_ 00.

4) Select the required parameters with (▲) and (▼). → PA_ 10.

5) Press (S SET). → 50.

6) Change the value with (SHIFT), (▲) and (▼). → 100.

7) Press (S SET). → PA_ 10.

EEPROM writing

8) Press (M MODE). → EE_SEt

9) Press (S SET). → EEP -.

10) Keep pressing (▲) (for approx.5 sec), then the bars increases as the right Fig. shows. → EEP --. → ------.

Writing starts.
(displays for only a moment) → StArt

Writing finishes → FinISh. / rESEt. (Writing completes) / Error. (Writing error occurs.)

After the writing completes, return to SELECTION display by referring to "Structure of each mode" (P.60 and 61).

<Remarks>

- rESEt. will be displayed when you change the parameter setup which change will be validated only after the reset. Turn off the power of the driver, then reset it.
- When writing error occurs, repeat the writing. If the writing error persists, the console might be a failure.
- Do not shut down the power during EEPROM writing, otherwise wrong data might be written. In such case, set up all parameters again to write them again after full confirmation.
- Do not disconnect the console connector from the driver between StArt and FinISh. If the connector is disconnected, insert the connector and repeat the procedure from the beginning.

Monitor Mode

When you turn on the Product for the first time, display shows r 0. (at motor stall) To change this display, change the setup of Pr01 (Initial status of LED). (For details, refer to Parameter Setup of each control mode.)

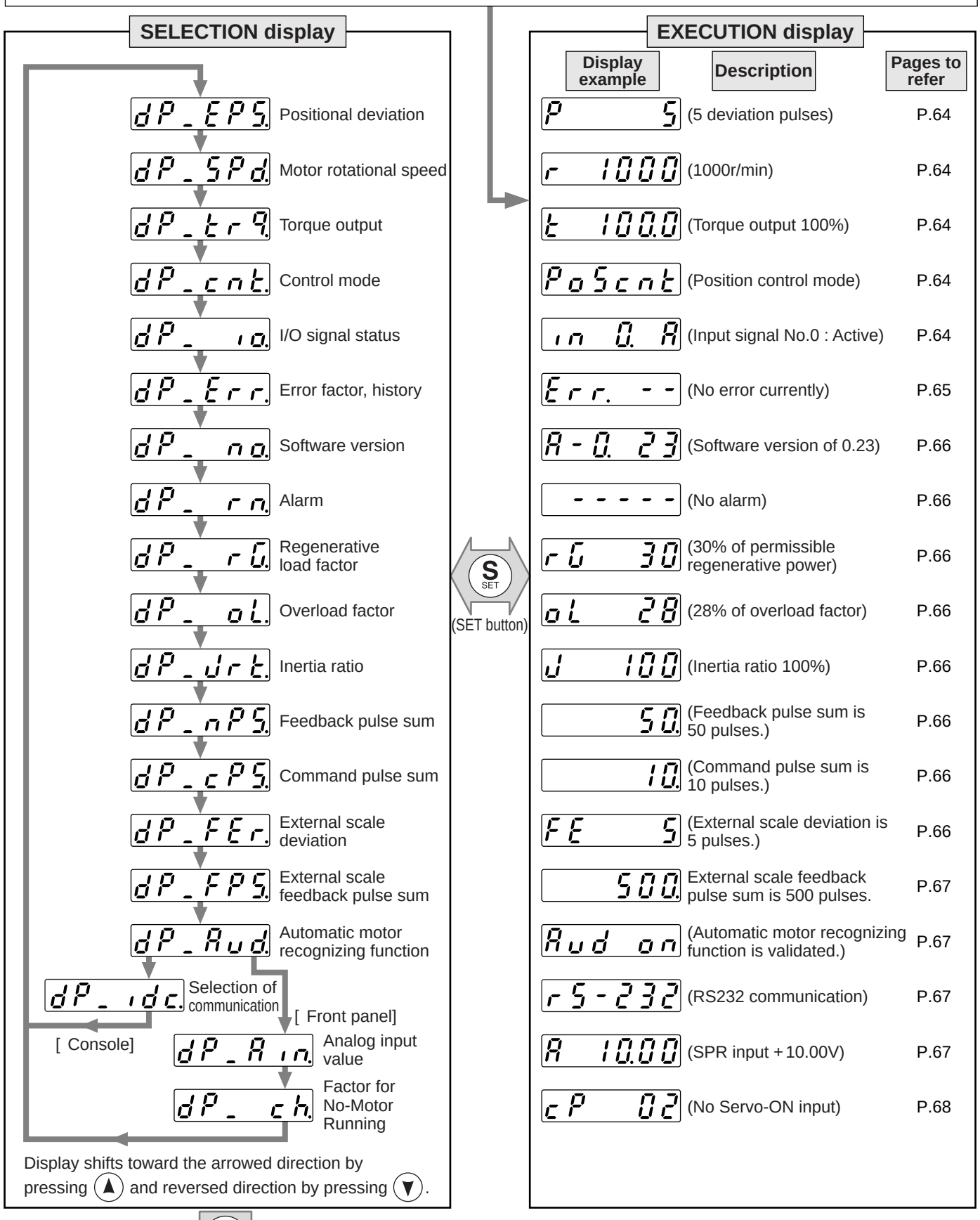

How to Use the Front Panel and Console

Display of Position Deviation, Motor Rotational Speed and Torque Output

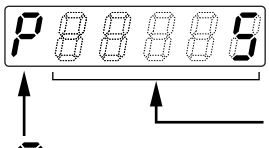

P .....Positional deviation (cumulative pulse counts of deviation counter)
- – display : generates rotational torque of CW direction (viewed from shaft end)
  no display : generates rotational torque of CCW direction (viewed from shaft end)

r .....Rotational speed of the motor unit [r/min]
- – display : CW rotation, no display : CCW rotation

t .....Torque command unit [%] (100 for rated torque)
- – display : CW rotation, no display : CCW rotation

<Note>
" + " is not displayed on LED, but only " - " appears.

Display of Control Mode

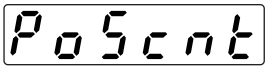

.....Position control mode

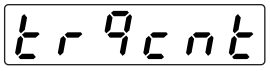

.....Torque control mode

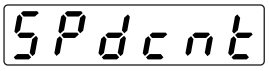

.....Velocity control mode

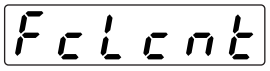

.....Full-closed control mode

Display of I/O Signal Status

Displays the control input and output signal to be connected to CN X5 connector.
Use this function to check if the wiring is correct or not.

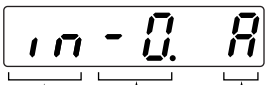

A .....Active
(This signal is valid)
- .....Inactive
(This signal is invalid)

Signal No.
(Hexadecimal number, 0-1F)

in .....Input signal

ot .....Output signal

Select the signal No. to be monitored by pressing ▲ ▼.

Transition when pressing ▲.

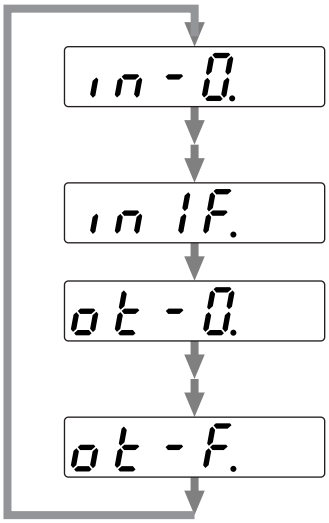

(Lowest place No. of input signal)

(Highest place No. of input signal)

(Lowest place No. of output signal)

(Highest place No. of output signal)

<Note>

- Shift the flashing decimal point with SHIFT.

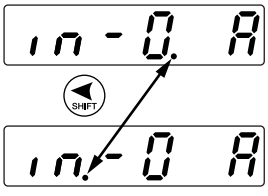

(Right side of decimal point : Signal selection mode)

(Left side of decimal point : Input/Output selection mode)

- The other way to change signal No. at I/O selection mode Signal selection mode.

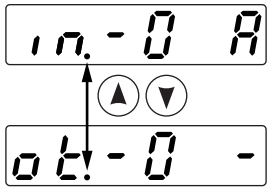

• **Signal No. and its title**

Input signal			
Signal No.	Title	Symbol	Pin No.
0	Servo-ON	SRV-ON	29
1	Alarm clear	A-CLR	31
2	CW over-travel inhibit	CWL	8
3	CCW over-travel inhibit	CCWL	9
4	Control mode switching	C-MODE	32
5	Speed-Zero clamp	ZEROSPD	26
6	Switching of electronic gear	DIV	28
8	Command pulse input inhibition	INH	33
9	Gain switching	GAIN	27
A	Deviation counter clear	CL	30
C	Selection 1 of Internal command speed	INTSPD1	33
D	Selection 2 of Internal command speed	INTSPD2	30
13	Damping control switching input	VS-SEL	26
14	Selection 3 of internal command speed	INTSPD3	28
15	Torque limit switching input	TL-SEL	27

Input signal			
Signal No.	Title	Symbol	Pin No.
0	Servo-Ready	S-RDY	35/34
1	Servo-Alarm	ALM	37/36
2	Positioning complete (In-position)	COIN	39/38
3	Release of external brake	BRK-OFF	11/10
4	Zero-speed detection	ZSP	12
5	Torque in-limit	TLC	40
6	In-speed(Speed coincidence)	V-COIN	12/40
9	At-speed(Speed arrival)	COIN	39/38
A	Full-closed positioning complete	EX-COIN	39/38

Reference of Error Factor and History

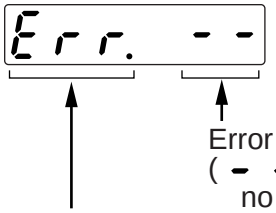

• You can refer the last 14 error factors (including present one)
Press ▲ ▼ to select the factor to be referred.

<Note>

• Following errors are not included in the history.
11:Under-voltage protection for control power
13:Under-voltage protection for main power
36:EEPROM parameter error protection
37:EEPROM check code error protection
38:Ocer-travel inhibition input protection
95:Automatic motor recognition error protection

• When one of the errors which are listed in error history occurs, this error and history o shows the same error No.

• When error occurs, the display flashes.

● **Error code No. and its content**

Error code No.	Error content
11	Under-voltage protection for control power
12	Over-voltage protection
13	Under-voltage protection for main power
14	Over-current protection
15	Overheat protection
16	Overload protection
18	Over-regenerative load protection
21	Encoder communication error protection
23	Encoder communication data error protection
24	Excess positional deviation protection
25	Excess hybrid deviation error protection
26	Over-speed protection
27	Command pulse multiplication error protection
28	External scale communication data error protection
29	Deviation counter overflow protection
34	Software limit protection
35	External scale communication data error protection
36	EEPROM parameter error protection
37	EEPROM parameter error protection
38	Run-inhibition input protection

Error code No.	Error content
39	Excess analog input error protection
40	Absolute system-down error protection
41	Absolute counter-over error protection
42	Absolute over-speed error protection
44	Absolute single-turn error protection
45	Absolute multi-turn error protection
47	Absolute status error protection
48	Encoder Z-phase error protection
49	Encoder CS signal error protection
50	External scale status 0 error protection
51	External scale status 1 error protection
52	External scale status 2 error protection
53	External scale status 3 error protection
54	External scale status 4 error protection
55	External scale status 5 error protection
65	Excess CCWTL input protection
66	Excess CWTL input protection
95	Automatic motor recognition error protection
others	Other error

How to Use the Front Panel and Console

Software Version

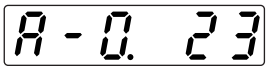

Displays the software version of the driver.

Alarm Display

- .....no alarm A .....Alarm occurrence

- **Over-regeneration alarm** : Turns on when regenerative load reaches more than 85% of alarm trigger level of regenerative load protection. Alarm trigger level is defined as 10% of regenerative resister working ratio, when Pr6C "Selection of external regenerative resister " is 1.
- **Overload alarm** : Turns on when the load reaches 85% or more of alarm trigger level of over-load protection.
- **Battery alarm** : Turns on when battery voltage for absolute encoder falls to alarm level (approx.3.2V) or lower.
- **Cooling fan rotational speed error alarm** : Shows cooling fan rotational speed error.
- **External scale alarm** : Turns on when external scale temperature rises to more than 85˚C or scale rigidity is not enough (adjustment is needed on mounting).

Display of Regenerative Load Factor

Display the ratio (%) against the alarm trigger level of regenerative protection.
This is valid when Pr6C (Selection of external regenerative resistor) is 0 or 1.

Display of Over-load Factor

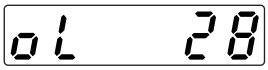

Displays the ratio (%) against the rated load.
Refer to P.258, "Overload Protection Time Characteristics" of When in Trouble.

Display of Inertia Ratio

Displays the inertia ratio (%) .
Value of Pr20 (Inertia ratio) will be displayed as it is.

Display of Feedback Pulse Sum, Command Pulse Sum and External Scale Feedback Pulse Sum

Total sum of pulses after control power-ON. Display overflows as the figures show.

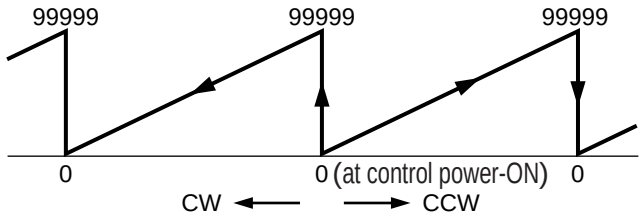

By pressing (▲) for approx. 3 sec. or longer on either one of screens of total sum of pulses display, you can clear feedback total sum, command pulse total sum or external scale feedback pulse total sum to " 0 " .

[0-clear EXECUTION display]

Keep pressing (▲) to shift the " . " as the right fig. shows.

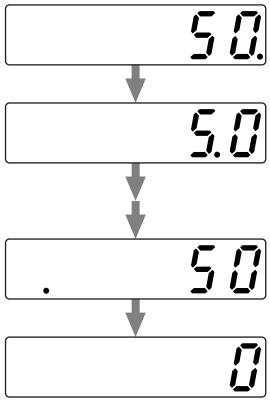

<Cautions>

- You can not clear the each date of [PANATERM®] and console to "0" with this operation.
- Since accumulation process of command pulse cannot be executed when the command pulse input prohibition is validated, during normal auto-gain tuning and while measuring function to frequency characteristics of [PANATERM®] is used, actual pulse input counts may differ from the displayed value of command pulse total sum.

External Scale Deviation

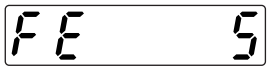

• Polarity (+) : CCW, (-) : CW
Limited by ± 999999.

Note) You can 0-clear the external scale deviation during normal auto-gain tuning and motor trial run.

Automatic Motor Recognizing Function

Automatic recognition is valid.

Display of Analog Input Value (Front Panel Only)

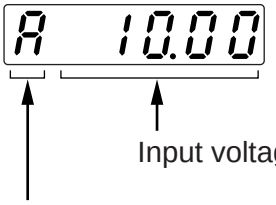

•Select the signal No. to be monitored by pressings ▲ ▼.

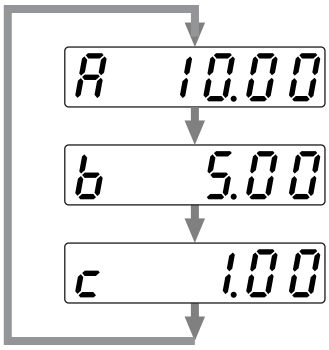

(SPR analog input value, unit [V]) Displays the value after offset correction.

(CCWTL analog input value, unit [V])

(CWTL analog input value, unit [V])

Note) Voltage exceeding ± 10V can not be displayed correctly.

Switching of the Driver to be Communicated

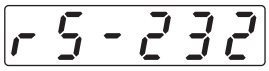

RS232 communication

.....Displays the ID of the connected driver. ID cannot be switched.

RS485 communication

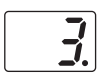

.....Select the ID of the driver to be operated by pressing ▲ ▼.

Initial display of LED of the selected driver will appear by pressing S SET.

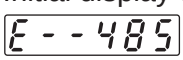

will appear when you select the ID of not-selected driver .

How to Use the Front Panel and Console

Display of the Factor of No-Motor Running

Displays the factor of no-motor running in number.

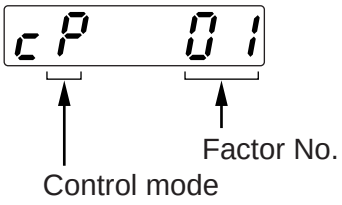

P .....Position control t .....Torque control

S ..... Velocity control F ..... Full-closed control

• Explanation of factor No.

Factor No.	Factor	Control mode	Content
flashing	Occurrence of error/alarm	all	An error is occurring, and an alarm is triggered.
00	No particular factor	all	No factor is detected for No-motor run. The motor runs in normal case.
01	Main power shutoff	all	The main power of the driver is not turned on.
02	No entry of SRV-ON input	all	The Servo-ON input (SRV-ON) is not connected to COM–.
03	Over-travel inhibition input is valid	all	While Pr04 is 0 (Run-inhibition input is valid), • CCW over-travel inhibition input (CCWL) is open and speed command is CCW direction. • CW over-travel inhibition input (CWL) is open and speed command is CW direction.
04	Torque limit setup is small	all	Either one of the valid torque limit setup value of Pr5E (1st) or Pr5F (2nd) is set to 5% or lower than the rating.
05	Analog torque limit input is valid.	P,S,F	While Pr03 is 0 (analog torque limit input accepted), • CCW analog torque limit input (CCWTL) is negative voltage and speed command is CCW direction. • CW analog torque limit input (CWTL) is positive voltage and speed command is CW direction.
06	INH input is valid.	P,F	Pr43 is 0 (Command pulse inhibition input is valid.), and INH is open.
07	Command pulse input frequency is low.	P,F	The position command per each control cycle is 1 pulse or smaller due to, • No correct entry of command pulse • No correct connection to the input selected with Pr40. • No matching to input status selected with Pr41 pr Pr42.
08	CL input is valid.	P,F	While Pr4E is 0 (Deviation counter clear at level), the deviation counter clear input (CL) is connected to COM–.
09	ZEROSPD input is valid.	S,T	While Pr06 is 1 (Speed zero clamp is valid.), the speed zero clamp input (ZEROSPD) is open.
10	External speed command is small.	S	While the analog speed command is selected, the analog speed command is smaller than 0.06[V] .
11	Internal speed command is 0.	S	While the internal speed command is selected, the internal speed command is set to lower than 30 [r/min]
12	Torque command is small.	T	The analog torque command input (SPR or CCWTL) is smaller than 5 [%] of the rating.
13	Speed limit is small.	T	• While Pr5B is 0 (speed is limited by 4th speed of internal speed), Pr56, (4th speed of speed setup) is set to lower than 30 [r/min] . • While Pr5B is 1 (speed is limited by SPR input), the analog speed limit input (SPR) is smaller than 0.06 [V] .
14	Other factor	all	The motor runs at 20 [r/min] or lower even though the factors from 1 to 13 are cleared, (the command is small, the load is heavy, the motor lock or hitting, driver/motor fault etc.)

<Note>

* Motor might run even though the other number than 0 is displayed.

Parameter Setup Mode

Operation at SELECTION display

Press (M MODE) once after pressing (S SET) from initial status of LED to change the display to Parameter setup mode,

Parameter No. (Hexadecimal No.)

<Note>
For parameters which place is displayed with " r ", the content changed and written to EEPROM becomes valid after turning off the power once.

Press (▲) or (▼) to select parameter No. to be referred/set.

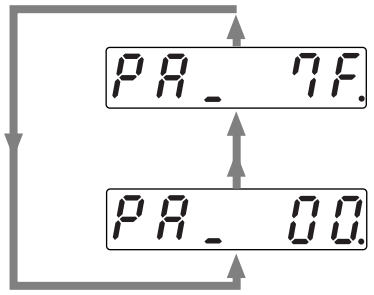

Press (▲) to shift to arrowed direction.

Press (▼) to shift to reversed direction.

Operation at EXECUTION display

Press (S SET) to change to EXECUTION display of

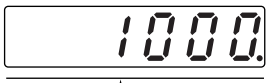

You can change the value which digit has a flashing decimal point.

Parameter value

<Note>
Each parameter has a limit in number of places for upper-shifting.

(1) You can change the decimal point with (◀ SHIFT), then shift the digit for data change.

(2) Press (▲) or (▼) to set up the value of parameter.

Value increases with (▲) decreases with (▼).

After setting up parameters, return to SELECT mode, referring to structure of each mode (P.60 and 61).

<Remarks>
After changing the parameter value and pressing (S SET), the content will be reflected in the control.
Do not extremely change the parameter value which change might affect the motor movement very much (especially velocity loop or position loop gains).

How to Use the Front Panel and Console

EEPROM Writing Mode

EEPROM Writing

Operation at SELECTION display

Starting from the initial LED status,
press (M MODE) two time after pressing (S SET),
then brings the display of
EEPROM Writing Mode,

Operation at EXECUTION display

Press (S SET) to make
EXECUTION DISPLAY to

Keep pressing (▲)
until the display changes to 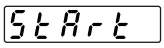

when you execute writing.

" - " increases while
keep pressing (▲)
(for approx. 5sec) as
the right fig. shows.

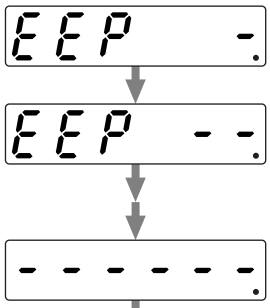

Starts writing. 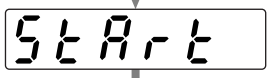

Finishes writing 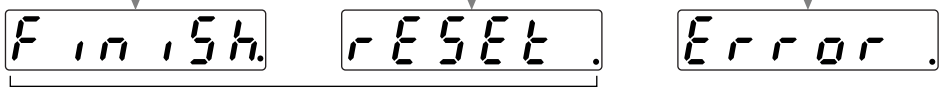

Writing completes　　Writing error

• When you change the parameters which contents become valid after resetting, 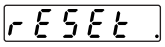

will be displayed after finishing wiring. Turn off the control power once to reset.

Note 1) When writing error occurs, make writing again. If the writing error repeats many times, this might be a failure.

Note 2) Don't turn off the power during EEPROM writing. Incorrect data might be written. If this happens, set up all of parameters again, and re-write after checking the data.

Auto-Gain Tuning Mode

Normal Mode Auto-Gain Tuning Screen

<Remarks>

- For details of normal auto-gain tuning, refer to P.236, "Normal Auto-Gain Tuning" of Adjustment. Pay a special attention to applicable range and cautions.
- The motor will be driven in a preset pattern by the driver in normal auto-gain tuning mode. You can change this pattern with Pr25 (Setup of action at normal auto-gain tuning), however, shift the load to where the operation in this pattern may not cause any trouble, then execute this tuning.
- Depending on the load, oscillation may occur after the tuning. In order to secure the safety, use the protective functions of Pr26 (Setup of software limit), Pr70 (Setup of excess position deviation) or Pr73 (Setup of over-speed level).

Operation at SELECTION display

Starting from the initial LED status, press (M MODE) three time after pressing (S SET), then brings the display of normal auto-gain tuning, then press (▲) (▼) to select the machine stiffness No.

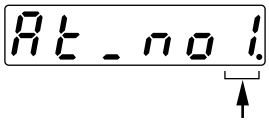

machine stiffness No.
(1 to 9, A (10) to F (15))

<Note>
For machine stiffness No., refer to P.238.

Operation at EXECUTION display

Press (S SET) to make EXECUTION DISPLAY to

After inhibiting command input, and during Servo-On status,keep pressing (▲) until Console (LED) display changes to StArt .

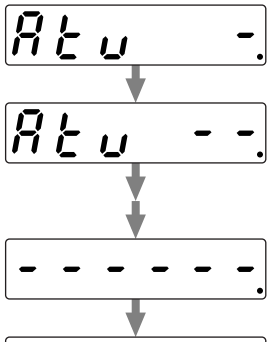

" - " increases by pressing (▲) (approx. 5sec) as the left fig. shows.

Starting of the motor

Tuning finishes. 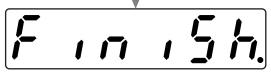

Tuning completes

Tuning error

<Note>
To prevent the loss of gain value due to the power shutdown, write into EEPROM.

After setting up tuning, return to SELECT DISPLAY, referring to structure of each mode (P.60 and 61).

<Remarks>

Don' t disconnect the console from the driver between StArt **and** Finish.
Should the connector is pulled out, insert it again and repeat the procedures from the beginning.

<Note> If the following status occurs during the tuning action, the tuning error occurs.

(1) During the tuning action, 1) when an error occurs, 2) when turned to Servo-OFF, 3) even the deviation counter is cleared, 4) when the tuning is actuated close to the limit switch and 5) when the main power is shut off.
(2) When the output torque is saturated because the inertia or load is too large.
(3) When the tuning can not be executed well causing oscillation.

If the tuning error occurs, value of each gain returns to the previous value before the tuning. The driver does not trip except error occurrence. Depending on the load, the driver might oscillate without becoming tuning error. (not showing Error . **)Extra attention should be paid to secure the safety.**

How to Use the Front Panel and Console

Fit-Gain Screen

Operation at SELECTION display

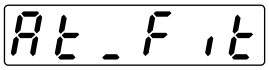

Operation at EXECUTION display

Press (S SET) to call for EXECUTION DISPLAY.

You can change/store the setup of real time auto-gain tuning/adaptive filter or start the fit-gain function by using (▲) (▼) key, after matching the decimal point to (1), (2), (4), (6) by pressing (◄).

(1) Stiffness setup of real time auto-gain tuning / Start of fit-gain

Display	Contents/Expansion function
You can change with (▲)(▼) F. Stiffness 15 ⋮ ⋮ 1. Stiffness 1 0. Stiffness 0	with each press of (▲), stiffness changes in numerical/alphabetical order (0 to 9,A(10) to F(15). Fit gain function starts by pressing (▼) at stiffness 0.

(2) Action setup of real time auto-gain tuning/Start of fit-gain

Display	Contents/Expansion function
You can change with (▲)(▼) 7. Valid	No gain switching : Load inertia does not change.
6. Valid	Vertical axis mode : Load inertia changes rapidly.
5. Valid	Vertical axis mode : Load inertia changes slowly.
4. Valid	Vertical axis mode : Load inertia does not change.
3. Valid	Normal mode : Load inertia changes rapidly.
2. Valid	Normal mode : Load inertia changes slowly.
1. Valid	Normal mode : Load inertia does not change.
0. Invalid	Executes automatic gain setup by pressing (▼) for approx.3sec. in this status.

(3) Status of real time auto-gain tuning action (display only)

[ ]	: Invalid
-	: Valid
¯ or _	: Estimating load inertia

(4) Switch of adaptive filter action and copy to 1st notch filter pf adaptive filter setup

Display	Contents/Expansion function
You can change with (▲)(▼) 2. Hold	Save the present adaptive filter setup to Pr1D,Pr1E by pressing (▲) for approx. 3 sec. in this status.
1. Valid	
0. Invalid	Clears 1st notch filter (Pr1D, Pr1E) by pressing (▼) for approx. 3 sec. in this status.

(5) Status of real time auto-gain tuning action (display only)

[ ]	: Invalid
-	: Valid
¯ or _	: Adaptive action working

(6) EEPROM writing

Display	Contents/Expansion function
F.	Write the present setup into EEPROM by pressing (▼) approx. 3 sec.

Auxiliary Function Mode

Alarm Clear Screen

Protective function will be activated and release the motor stall status (error status).

Operation at SELECTION display

Starting from the initial LED status,
Press (M MODE) four time after pressing (S SET),
then press (▲) (▼) to make a display to 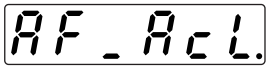

Operation at EXECUTION display

Press (S SET) to call for
EXECUTION display of 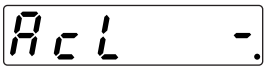

Keep pressing (▲) until the console (LED)
changes to 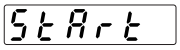

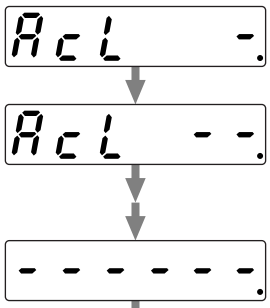

" - " increases by pressing (▲)
(approx. 5sec) as the right fig. shows.

Alarm clear starts.

Clearing finishes. 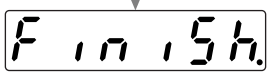

Alarm clear completes

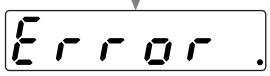

Clear is not finished.
Release the error by resetting the power.

After alarm cleaning, return to SELECTION display, referring to structure of each mode (P.60 and 61).

<Remarks>
Don't disconnect the console from the driver between 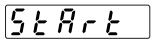

and 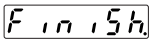

.
Should the connector is pulled out, insert it again and repeat the procedures from the beginning.

How to Use the Front Panel and Console

Automatic Offset Adjustment (Front Panel Only)

Automatically adjust the offset value of Pr52 (Velocity command offset) of analog velocity command input (SPR/TRQR).

Operation at SELECTION display

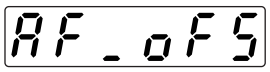

Operation at EXECUTION display

• Press (S SET) to call for EXECUTION display of oFS -

When you execute automatic offset adjustment, make command input to 0V, then keep pressing (▲) until the display changes to StArt .

" - "increases by pressing (▲) (approx. 5sec) as the right fig. shows.

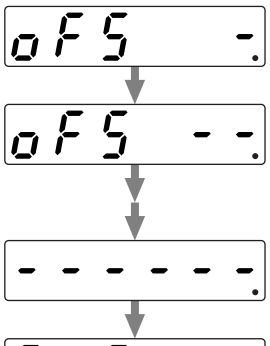

Automatic offset adjustment starts.

Adjustment finishes.

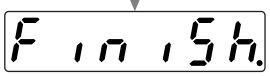

Automatic offset adjustment finishes.

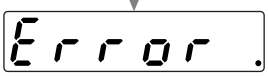

Error occurs.
(Invalid mode is selected, or offset value exceeds the setup range of Pr52.)

<Notes>

This function is invalid at position control mode.
You cannot write the data only by executing automatic offset adjustment.
Execute a writing to EEPROM when you need to reflect the result afterward.

Trial Run (JOG Run)

You can make a trial run (JOG run) without connecting the Connector, CN X5 to the host controller such as PLC.

<Remarks>

- Separate the motor from the load, detach the Connector, CN X5 before the trial run.
- Bring the user parameter setups (especially Pr11-14 and 20) to defaults, to avoid oscillation or other failure.

Inspection Before Trial Run

(1) Inspection on wiring
- Miswiring ?
  (Especially power input and motor output)
- Short or grounded ?
- Loose connection ?

(2) Confirmation of power supply and voltage
- Rated voltage ?

(3) Fixing of the servo motor
- Unstable mounting ?

(4) Separation from the mechanical system

(5) Release of the brake

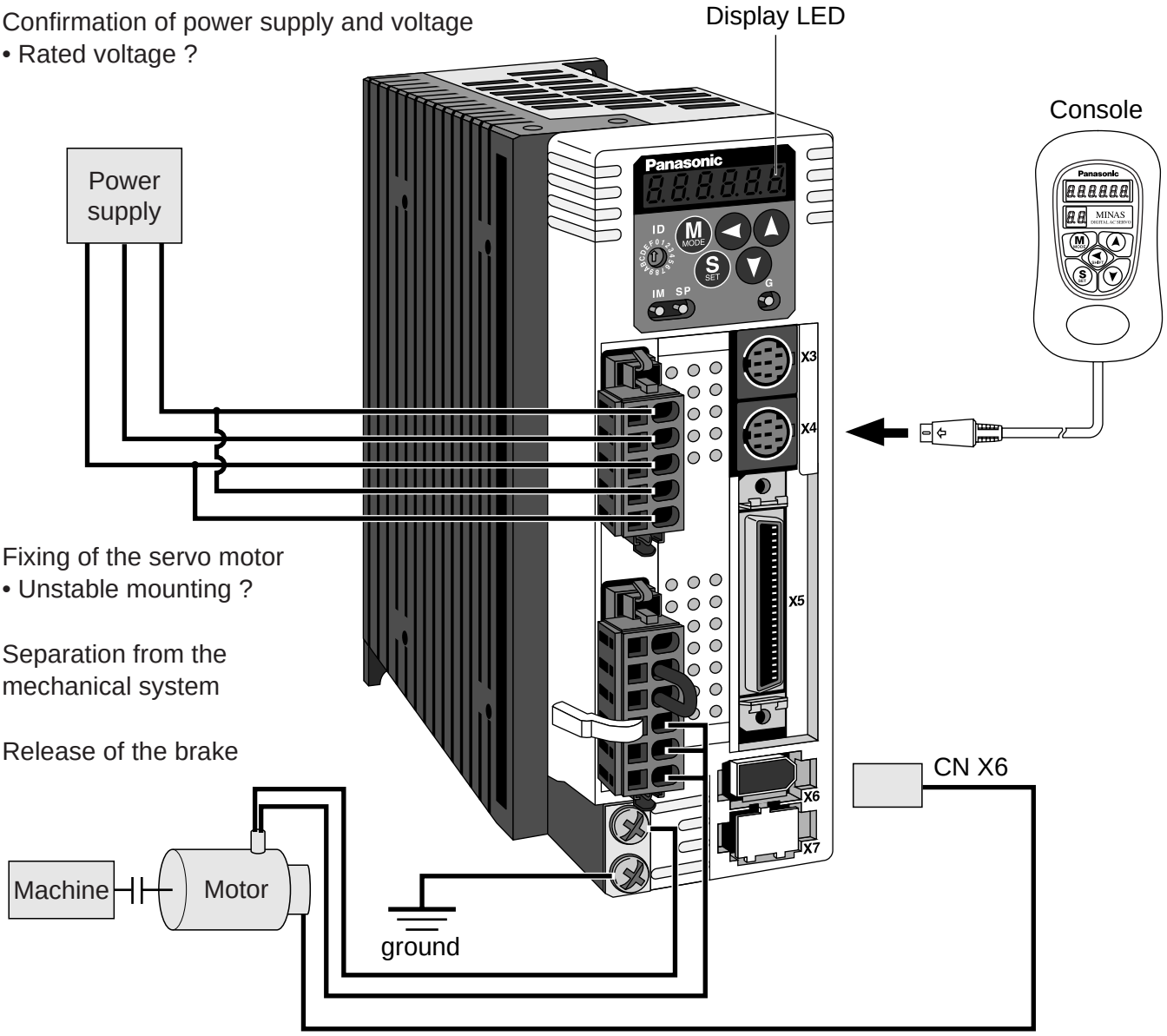

(6) Turn to Servo-OFF after finishing the trial run by pressing (S SET) .

How to Use the Front Panel and Console

Procedure for Trial Run

When you use the console, insert the console connector to CN X4 of the driver securely and turn on the driver power.

Operation at SELECTION display

Press (M MODE) four time after pressing (S SET), to setup auxiliary function mode, then with (▲) (▼), make a display to AF_JoG.

Operation at EXECUTION display

Press (S SET) to call for EXECUTION DISPLAY of JoG -.

Then keep pressing (▲) until the display of Console (LED) changes to rEAdY.

JoG -.

JoG --.

- - - - - -

" - " increases by pressing (▲) (approx. 5sec) as the left fig. shows.

Preparation step 1 for trial run

rEAdY.

Error.

Not a servo-ready status.
(Shuts off the main when error occurs.)

Then keep pressing (◄ SHIFT) until the display of LED changes to SrU_on.

rEAdY.

rEAdY.

r.EAdY

Keep pressing (◄ SHIFT) (approx. 5 sec) to shift the decimal point toward left as the left fig. shows.

Preparation step 2 for trial run

SrU_on.

Servo-ON status

Error.

Not a Servo-Ready.
Or SRV-ON signal is not entered.

Turns to Servo-OFF by pressing (S SET).

After the Servo-ON of preparation step 2 for trial run,
the motor runs at the preset speed with Pr3D (JPG speed) to CCW direction by pressing (▲) CW by pressing (▼).
The motor stops by pressing (▲) (▼).
After finished trial running, return to SELECTION display, referring to structure of each mode (P.60 and 61).

<Notes>

- Set up torque limit input invalidation (Pr03) to 1, run-inhibit input invalidation (Pr04) to 1 and ZEROSPD input (Pr06) to 0.
- If SRV-ON becomes valid during trial run, the display changes to Error. which is normal run through external command.

<Caution>

If such trouble as disconnection of cable or connector occurs during trial run, the motor makes over-run for maximum 1 sec. Pay an extra attention for securing safety.

Clearing of Absolute Encoder

Only applicable to the system which uses absolute encoder. You can clear the alarm and multi-turn data of the absolute encoder.

Operation at SELECTION display

Press (M MODE) four time after pressing (S SET), to setup auxiliary function mode, then with (▲) (▼) , make a display to 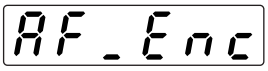

Operation at EXECUTION display

Press (S SET) to call for EXECUTION DISPLAY of 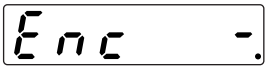

Then keep pressing (▲) until the display of Console (LED) changes to 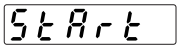

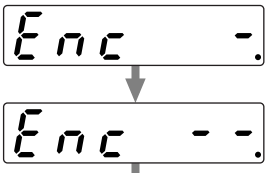

" - " increases by pressing (▲) (approx. 5sec) as the left fig. shows.

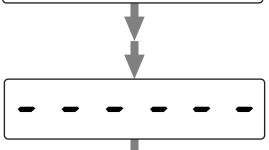

Clearing of absolute encoder starts 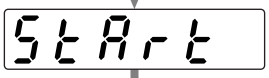

Clearing finishes 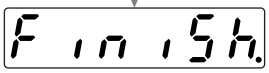

Clearing of absolute encoder completes

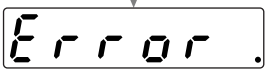

Error occurs
(When non-applicable encoder is connected)

After clearing of absolute encoder finishes, return to SELECTION display, referring to structure of each mode (P.60 and 61).

<Remarks>

Don' t disconnect the console from the driver between 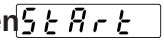

to 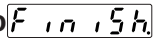

.

Should the connector is pulled out, insert it again and repeat the procedures from the beginning.

How to Use the Front Panel and Console

Clearing of External Scale Error (Front panel only)

You can clear an error of the external scale.

Operation at SELECTION display

Press (M MODE) four time after pressing (S SET), to setup auxiliary function mode, then with (▲)(▼), make a display to 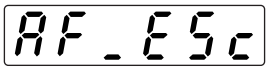

Operation at EXECUTION display

Press (S SET) to call for EXECUTION DISPLAY of 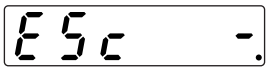

Then keep pressing (▲) until the display of Console (LED) changes to 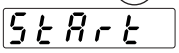

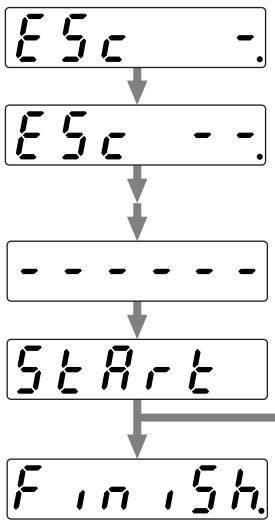

" - " increases by pressing (▲) (approx. 5sec) as the left fig. shows.

Clearing of absolute encoder starts

Clearing finishes.

Clearing of absolute encoder completes

Error occurs (At other control mode than full-closed control, and when no external scale error has occurred)

After cleaning of External scale Error, return to SELECTION display, referring to the structure of each mode (P.60 and 61).

Copying Function (Console Only)

Copying of Parameters from the Driver to the Console

Operation at SELECTION display

Starting from initial LED status, Press (M MODE) five time after pressing (S SET), then press (▲) (▼), to make a display to

Operation at EXECUTION display

Press (S SET) to call for EXECUTION DISPLAY of

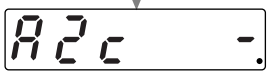

Keep pressing (▲) until the console display (LED) changes to PHASE 1

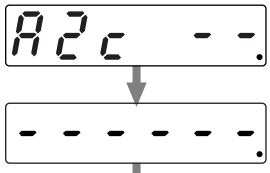

" - " increases by pressing (▲) (approx. 3sec) as the left fig. shows.

Initialization of EEPROM of the console starts.

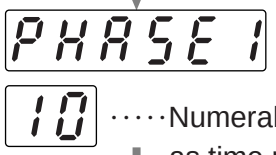

·····Numeral decreases as time passes.

Copying of parameters from the driver to the console starts.

Writing of parameters into the console EEPROM starts.

Copying completes normally.

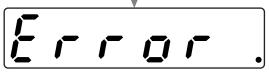

Error display

<Remarks>
If error is displayed, repeat the procedures from the beginning.
Press (S SET) for releasing error.

After copying finishes, return to SELECTION display, referring to structure of each mode (P.60 and 61)

<Remarks>
Don't disconnect the console from the driver between PHASE 1 to PHASE 3
Should the connector is pulled out, insert it again and repeat the procedures from the beginning.
<Note>
If the error display repeats frequently, check the broken cable, disconnection of the connector, misoperation due to noise or failure of console.

How to Use the Front Panel and Console

Copying of Parameters from the Console to the Driver

Operation at SELECTION display

Starting from initial LED status,
Press (M MODE) five time after pressing (S SET), then press
(▲) (▼) to make a display to

Operation at EXECUTION display

Press (S SET) to call for
EXECUTION DISPLAY of

Keep pressing (▲) until
the console display (LED)
changes to PHASE 1

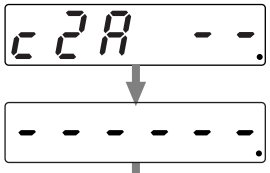

" - " increases by
pressing (▲) (approx. 3sec)
as the left fig. shows.

Reading of EEPROM of the
console starts.

PHASE 1

10 .....Numeral decreases
as time passes.

Copying of parameters from
the console to the driver starts.

PHASE 2

5

Writing of parameters into
the driver EEPROM starts.

PHASE 3

0

Finish.

Copying completes normally.

Error

Error display

<Remarks>
If error is displayed, repeat the
procedures from the beginning.
Press (S SET) for releasing error.

After copying finishes, return to SELECTION display, referring to structure of each mode (P.60 and 61).

<Remarks>
Don' t disconnect the console from the driver between PHASE 1 **to** PHASE 3
Should the connector is pulled out, insert it again and repeat the procedures from the beginning.

<Note>
If the error display repeats frequently, check the broken cable, disconnection of the connector, misoperation due to noise or failure of console.

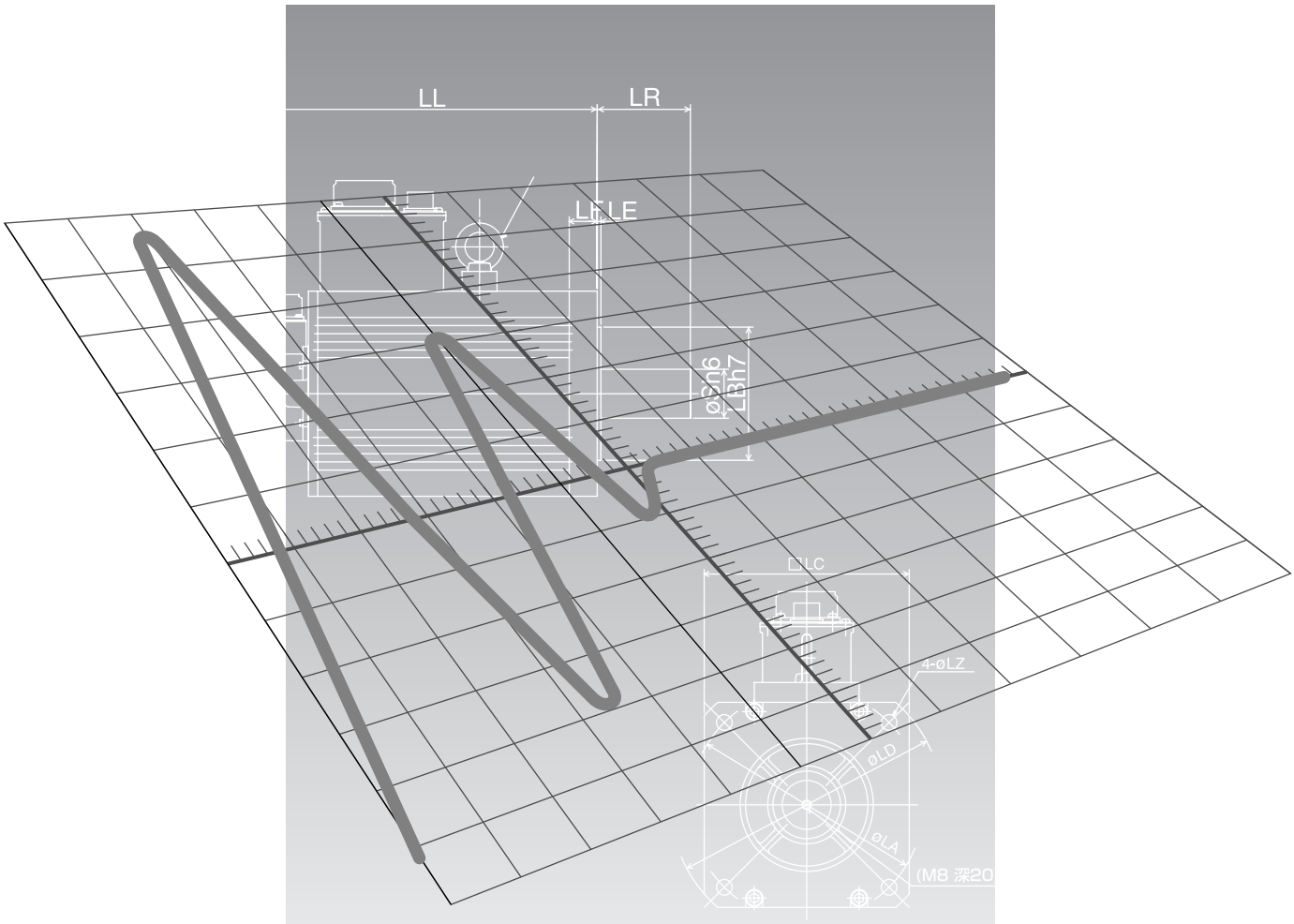

[Connection and Setup of Position Control Mode]

page

Control Block Diagram of Position Control Mode 82

Wiring to the Connector, CN X5 83

Wiring Example to the Connector, CN X5 83
Interface Circuit 84
Input Signal and Pin No. of the Connector, CN X5 86
Output Signal and Pin No. of the Connector, CN X5 92
Connecting Example to Host Controller 96

Trial Run (JOG Run) at Position Control Mode .. 104

Inspection Before Trial Run 104
Trial Run by Connecting the Connector, CN X5 104

Real-Time Auto-Gain Tuning 106

Outline 106
Applicable Range 106
How to Operate 106
Adaptive Filter 107
Parameters Which are Automatically Set 107

Parameter Setup 108

Parameters for Functional Selection 108
Parameters for Adjustment of Time Constant of Gains and Filters 111
Parameters for Auto-Gain Tuning 112
Parameters for Adjustment (2nd Gain Switching Function) 115
Parameters for Position Control 116
Parameters for Velocity/Torque Control 120
Parameters for Sequence 120

Control Block Diagram of Position Control Mode

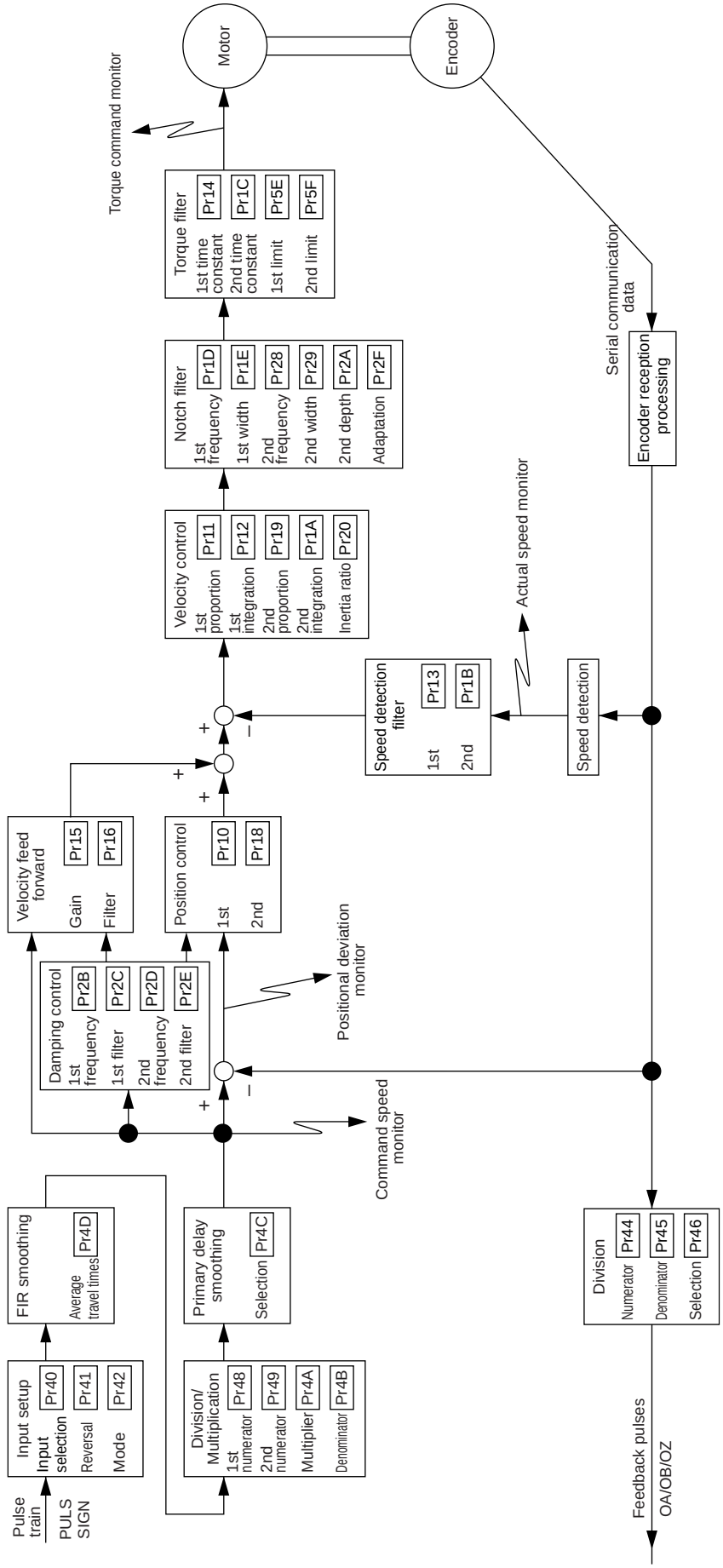

Wiring Example to the Connector, CN X5

Wiring Example of Position Control Mode

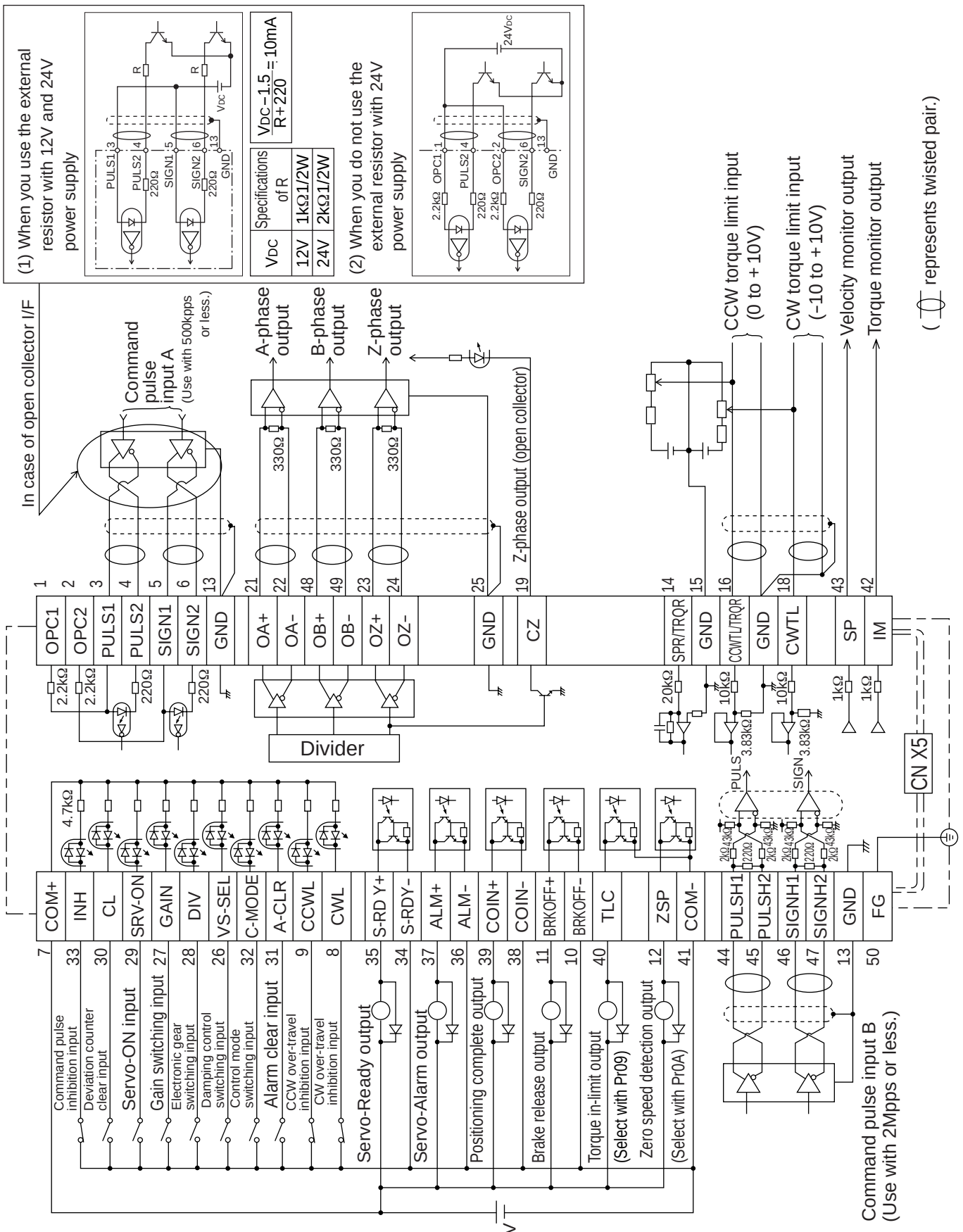

Wiring to the Connector, CN X5

Interface Circuit

Input Circuit

SI Connection to sequence input signals

- Connect to contacts of switches and relays, or open collector output transistors.
- When you use contact inputs, use the switches and relays for micro current to avoid contact failure.
- Make the lower limit voltage of the power supply (12 to 24V) as 11.4V or more in order to secure the primary current for photo-couplers.

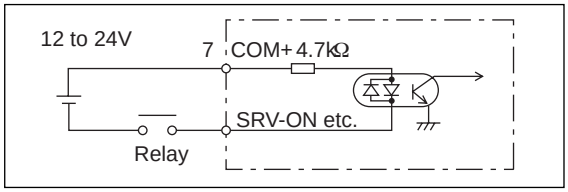

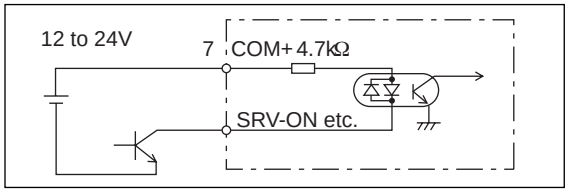

PI1 Connection to sequence input signals (Pulse train interface)

(1) Line driver I/F (Input pulse frequency : max. 500kpps)

- This signal transmission method has better noise immunity. We recommend this to secure the signal transmission.

(2)Open collector I/F (Input pulse frequency : max. 200kpps)

- The method which uses an external control signal power supply (V_{DC})
- Current regulating resistor R corresponding to V_{DC} is required in this case.
- Connect the specified resister as below.

V_{DC}	Specifications
12V	1kΩ1/2W
24V	2kΩ1/2W

$$\frac{V_{DC}-1.5}{R+220} \fallingdotseq 10mA$$

(3)Open collector I/F (Input pulse frequency : max. 200kpps)

- Connecting diagram when a current regulating resistor is not used with 24V power supply.

represents twisted pair.

Max.input voltage : DC24V,
Rated current : 10mA

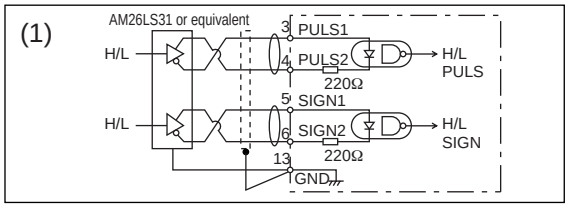

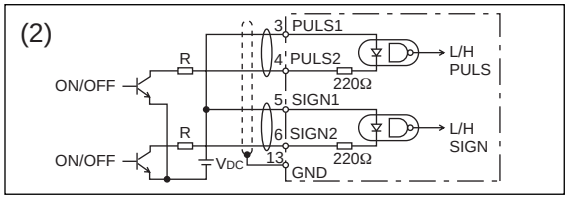

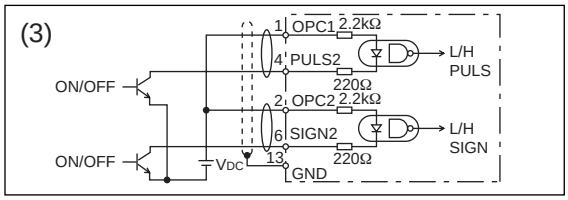

PI2 Connection to sequence input signals (Pulse train interface exclusive to line driver)

Line driver I/F (Input pulse frequency : max. 2Mpps)

- This signal transmission method has better noise immunity. We recommend this to secure the signal transmission when line driver I/F is used.

represents twisted pair.

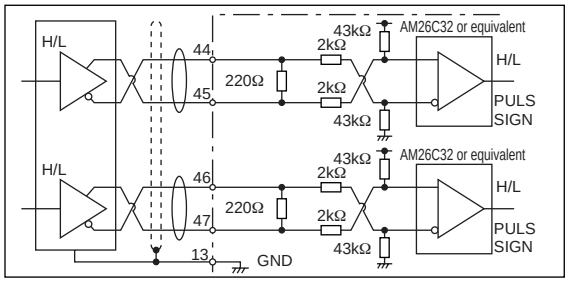

AI Analog command input

- The analog command input goes through 3 routes, SPR/TRQR(Pin-14), CCWTL (Pin-16) and CWTL (Pin-18).
- Max. permissible input voltage to each input is ±10V. For input impedance of each input, refer to the right Fig.
- When you compose a simple command circuit using variable resistor(VR) and register R, connect as the right Fig. shows. When the variable range of each input is made as –10V to +10V, use VR with 2kΩ, B-characteristics, 1/2W or larger, R with 200Ω, 1/2W or larger.
- A/D converter resolution of each command input is as follows.
  (1)ADC1 : 16 bit (SPR/TRQR), (including 1bit for sign), ±10V
  (2)ADC2 : 10 bit (CCWTL, CWTL), 0 to 3.3V

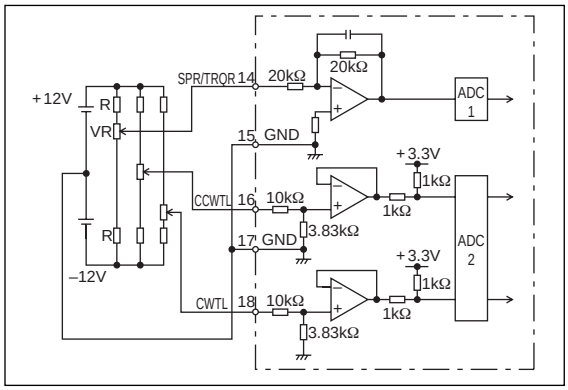

Output Circuit

SO1 SO2 Sequence output circuit

- The output circuit is composed of open collector transistor outputs in the Darlington connection, and connect to relays or photo-couplers.
- There exists collector to emitter voltage, V_{CE} (SAT) of approx. 1V at transistor-ON, due to the Darlington connection of the output or. Note that normal TTL IC cannot be directly connected since it does not meet VIL.
- There are two types of output, one which emitter side of the output transistor is independent and is connectable individually, and the one which is common to – side of the control power supply (COM–).
- If a recommended primary current value of the photo-coupler is 10mA, decide the resistor value using the formula of the right Fig.

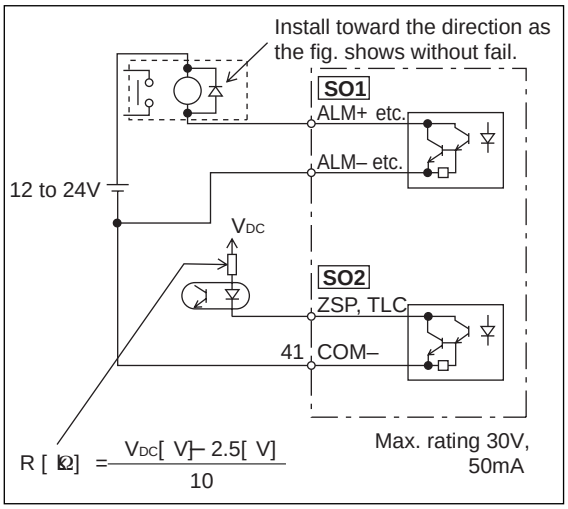

For the recommended primary current value, refer to the data sheet of apparatus or photo-coupler to be used.

PO1 Line driver (Differential output) output

- Feeds out the divided encoder outputs (A, B and Z-phase) in differential through each line driver.
- At the host side, receive these in line receiver. Install a terminal resistor (approx. 330Ω) between line receiver inputs without fail.
- These outputs are not insulated.

⏚ represents twisted pair.

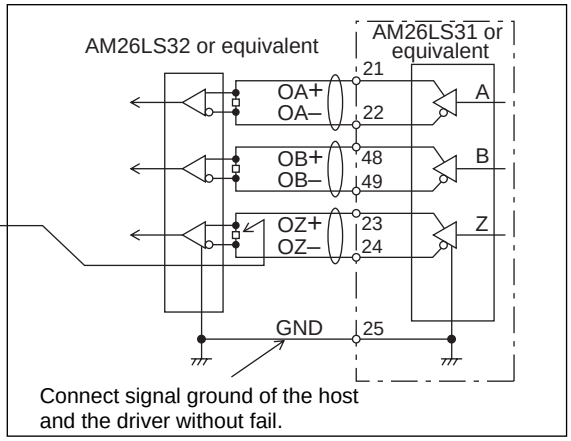

PO2 Open collector output

- Feeds out the Z-phase signal among the encoder signals in open collector. This output is not insulated.
- Receive this output with high-speed photo couplers at the host side, since the pulse width of the Z-phase signal is narrow.

⏚ represents twisted pair.

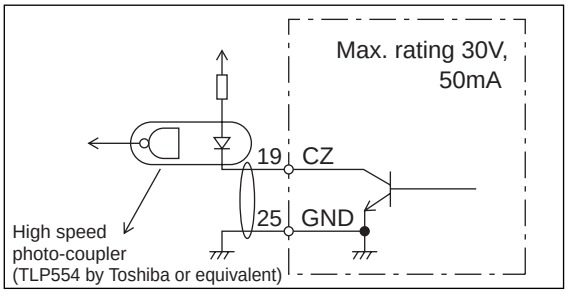

AO Analog monitor output

- There are two outputs, the speed monitor signal output (SP) and the torque monitor signal output (IM)
- Output signal width is ±10V.
- The output impedance is 1kΩ. Pay an attention to the input impedance of the measuring instrument or the external circuit to be connected.

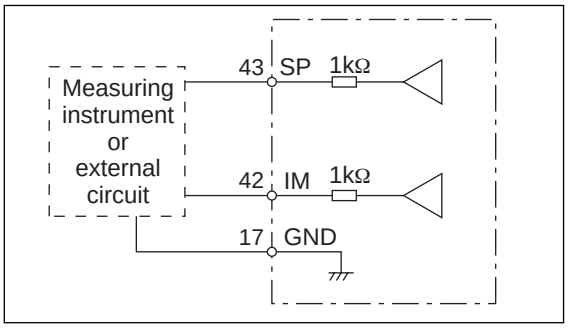

<Resolution>

(1) Speed monitor output (SP)
With a setup of 6V/3000r/min (Pr07=3), the resolution converted to speed is 8r/min/16mV.

(2) Torque monitor output (IM)
With a relation of 3V/rated torque (100%), the resolution converted to torque is 0.4%/12mV.

Wiring to the Connector, CN X5

Input Signal and Pin No. of the Connector, CN X5

Input Signals (common) and Their Functions

<table>
<tr><th>Title of signal</th><th>Pin No.</th><th>Symbol</th><th>Function</th><th>I/F circuit</th></tr>
<tr><td>Power supply for control signal (+)</td><td>7</td><td>COM+</td><td>• Connect + of the external DC power supply (12 to 24V).
• Use the power supply voltage of 12V ± 5% – 24V ± 5%</td><td>–</td></tr>
<tr><td>Power supply for control signal (–)</td><td>41</td><td>COM–</td><td>• Connect – of the external DC power supply (12 to 24V).
• The power capacity varies depending on a composition of I/O circuit. 0.5A or more is recommended.</td><td>–</td></tr>
<tr><td>CW over-travel inhibit input</td><td>8</td><td>CWL</td><td>• Use this input to inhibit a CW over-travel (CWL).
• Connect this so as to make the connection to COM– open when the moving portion of the machine over-travels the movable range toward CW.
• CWL input will be invalidated when you set up Pr04 (Setup of over-travel inhibit input) to 1.Default is "Invalid (1)".
• You can select the action when the CWL input is validated with the setup of up Pr66 (Sequence at over-travel inhibit). Default is "Emergency stop with dynamic brake".(Pr66= 0)</td><td>SI
P.84</td></tr>
<tr><td>CCW over-travel inhibit input</td><td>9</td><td>CCWL</td><td>• Use this input to inhibit a CCW over-travel (CCWL).
• Connect this so as to make the connection to COM– open when the moving portion of the machine over-travels the movable range toward CCW.
• CWL input will be invalidated when you set up Pr04 (Setup of over-travel inhibit input) to 1.Default is "Invalid (1)".
• You can select the action when the CCWL input is validated with the setup of Pr66 (Sequence at over-travel inhibit). Default is "Emergency stop with dynamic brake".(Pr66= 0)</td><td>SI
P.84</td></tr>
<tr><td>damping control switching input</td><td>26</td><td>VS-SEL</td><td>• Function varies depending on the control mode.
<table>
<tr><td>Velocity/ Torque control</td><td>• Becomes to a speed-zero clamp input (ZEROSPD).
<table>
<tr><th>Pr06</th><th>Connection to COM–</th><th>Content</th></tr>
<tr><td>0</td><td>–</td><td>ZEROSPD input is invalid.</td></tr>
<tr><td rowspan="2">1</td><td>open</td><td>Speed command is 0</td></tr>
<tr><td>close</td><td>Normal action</td></tr>
<tr><td rowspan="2">2</td><td>open</td><td>Speed command is to CCW</td></tr>
<tr><td>close</td><td>Speed command is to CW.</td></tr>
</table>
• In case Pr06 is 2 at torque control, ZERPSPD is invalid.</td></tr>
<tr><td>Position/ Full-closed control</td><td>• Becomes to an input of damping control switching (VS-SEL).
• While Pr24 (Damping filter switching selection) is 1, the 1st damping filter (Pr2B, Pr2C) will be validated when you open this input, and the 2nd damping filter (Pr2D, Pr2E) will be validated when you connect this input to COM–.</td></tr>
</table></td><td>SI
P.84</td></tr>
<tr><td>Gain switching input
or
Torque limit switching input</td><td>27</td><td>GAIN

TL-SEL</td><td>• Function varies depending on the setups of Pr30 (2nd gain setup) and Pr03 (Selection of torque limit).
<table>
<tr><th>Pr03</th><th>Pr30</th><th>Connection to COM–</th><th>Content</th></tr>
<tr><td rowspan="6">0 – 2</td><td rowspan="2">0</td><td>open</td><td>Velocity loop : PI (Proportion/Integration) action</td></tr>
<tr><td>close</td><td>Velocity loop : P (Proportion) action</td></tr>
<tr><td rowspan="4">1</td><td colspan="2">when the setups of Pr31 and Pr36 are 2</td></tr>
<tr><td>open</td><td>1st gain selection (Pr10,11,12,13 and 14)</td></tr>
<tr><td>close</td><td>2nd gain selection (Pr18,19,1A,1B and 1C)</td></tr>
<tr><td colspan="2">when the setups of Pr31 and Pr36 are other than 2</td></tr>
<tr><td>3</td><td>–</td><td colspan="2">invalid
• Input of torque limit switching (TL-SEL)
• Pr5E (Setup of 1st torque limit) will be validated when you open this input, and Pr5F (Setup of 2nd torque limit) will be validated when you connect this input to COM–.</td></tr>
</table>
• For details of 2nd gain switching function, refer to P.243 "Gain Switching Function" of Adjustment.</td><td>SI
P.84</td></tr>
</table>

<table>
<tr><th>Title of signal</th><th>Pin No.</th><th>Symbol</th><th>Function</th><th>I/F circuit</th></tr>
<tr><td>Electronic gear (division/ multiplication) switching input</td><td>28</td><td>DIV</td><td>• Function varies depending on the control mode.
<table><tr><td>Position/ Full-closed control</td><td>• You can switch the numerator of electronic gear.
• By connecting to COM–, you can switch the numerator of electronic gear from Pr48 (1st numerator of electronic gear) to Pr49 (2nd numerator of electronic gear)
• For the selection of command division/multiplication, refer to the table of next page, "Numerator selection of command scaling"</td></tr><tr><td>Velocity control</td><td>• Input of internal speed selection 3 (INTSPD3).
• You can make up to 8-speed setups combining INH/ INTSPD1 and CL/INTSPD2 inputs. For details of setup, refer to the table of P.131, "Selection of Internal Speed".</td></tr><tr><td>Torque control</td><td>• This input is invalid.</td></tr></table><Caution>
Do not enter the command pulse 10ms before/after switching.
• Numerator selection of electronic gear
<table><tr><th>CN X5 Pin-28 DIV</th><th>Setup of electronic gear</th></tr><tr><td>Open</td><td>$\frac{\text{1st numerator of electronic gear (Pr48)} \times 2^{\text{Multiplier of command scaling (Pr4A)}}}{\text{Denominator of electronic gear (Pr4B)}}$
or
$\frac{\text{Encoder resolution*}}{\text{Command pulse counts per single turn (Pr4B)}}$ * Automatic setup by setting up Pr48 to 0</td></tr><tr><td>Short</td><td>$\frac{\text{2nd numerator of electronic gear (Pr49)} \times 2^{\text{Multiplier of command scaling (Pr4A)}}}{\text{Denominator of electronic gear (Pr4B)}}$
or
$\frac{\text{Encoder resolution*}}{\text{Command pulse counts per single turn (Pr4B)}}$ * Automatic setup by setting up Pr49 to 0</td></tr></table></td><td>SI
P.84</td></tr>
<tr><td>Servo-ON input</td><td>29</td><td>SRV-ON</td><td>• Turns to Servo-ON status by connecting this input to COM–.
• Turns to Servo-OFF status by opening connection to COM–, and current to the motor will be shut off.
• You can select the dynamic brake action and the deviation counter clearing action at Servo-OFF with Pr69 (Sequence at Servo-OFF).
<Caution>
1.Servo-ON input becomes valid approx. 2 sec after power-on.
(see P.42, "Timing Chart" of Preparation.)
2.Never run/stop the motor with Servo-ON/OFF.
3.After shifting to Servo-ON, allow 100ms or longer pause before entering the pulse command.</td><td>SI
P.84</td></tr>
</table>

Wiring to the Connector, CN X5

<table>
<tr><th>Title of signal</th><th>Pin No.</th><th>Symbol</th><th>Function</th><th>I/F circuit</th></tr>
<tr><td>Deviation counter clear input</td><td>30</td><td>CL</td><td>• Function varies depending on the control mode.
Position/ Full-closed control
• Input (CL) which clears the positional deviation counter and full-closed deviation counter.
• You can clear the counter of positional deviation and full-closed deviation by connecting this to COM–.
• You can select the clearing mode with Pr4E (Counter clear input mode).
<table><tr><th>Pr4E</th><th>Content</th></tr><tr><td>0</td><td>Clears the counter of positional deviation and full-closed deviation while CL is connected to COM–.</td></tr><tr><td>1
[Default]</td><td>Clears the counter of positional deviation and full-closed deviation only once by connecting CL to COM– from open status.</td></tr><tr><td>2</td><td>CL is invalid</td></tr></table>Velocity control
• Input of selection 2 of internal command speed (INTSPD2)
• You can make up to 8-speed setups combining INH/ INTSPD1 and CL/INTSPD3 inputs. For details of setup, refer to the table in P.131, "Selection of Internal Speed" of Velocity Control Mode.
Torque control
• This input is invalid.</td><td>SI
P.84</td></tr>
<tr><td>Alarm clear input</td><td>31</td><td>A-CLR</td><td>• You can release the alarm status by connecting this to COM– for more than 120ms.
• The deviation counter will be cleared at alarm clear.
• There are some alarms which cannot be released with this input.
For details, refer to P.252, "Protective Function " of When in Trouble.</td><td>SI
P.84</td></tr>
<tr><td>Control mode switching input</td><td>32</td><td>C-MODE</td><td>• You can switch the control mode as below by setting up Pr02 (Control mode setup) to 3-5.
<table><tr><th>Pr02 setup</th><th>Open (1st)</th><th>Connection to COM– (2nd)</th></tr><tr><td>3</td><td>Position control</td><td>Velocity control</td></tr><tr><td>4</td><td>Position control</td><td>Torque control</td></tr><tr><td>5</td><td>Velocity control</td><td>Torque control</td></tr></table><Caution>
Depending on how the command is given at each control mode, the action might change rapidly when switching the control mode with C-MODE. Pay an extra attention.</td><td>SI
P.84</td></tr>
<tr><td>Inhibition input of command pulse</td><td>33</td><td>INH</td><td>• Function varies depending on the control mode.
Position/ Full closed control
• Inhibition input of command pulse input (INH)
• Ignores the position command pulse by opening the connection to COM–
• You can invalidate this input with Pr43 (Invalidation of command pulse inhibition input)
<table><tr><th>Pr43</th><th>Content</th></tr><tr><td>0</td><td>INH is valid.</td></tr><tr><td>1(Default)</td><td>INH is valid.</td></tr></table>Velocity control
• Selection 1 input of internal command speed (INTSPD1)
•You can make up to 8-speed setups combining INH/INTSPD2 and CL/INTSPD3 inputs. For details of the setup, refer to the table of P.131, "Selection of Internal Speed" of Velocity Control Mode.
Torque control
• This input is invalid.</td><td>SI
P.84</td></tr>
</table>

Input Signals (Pulse Train) and Their Functions

You can select appropriate interface out of two kinds, depending on the command pulse specifications.

• Pulse train interface exclusive for line driver

Title of signal	Pin No.	Symbol	Function	I/F circuit
Command pulse input 1	44	PULSH1	• Input terminal for position command pulse. You can select by setting up Pr40 (Selection of command pulse input) to 1. • This input becomes invalid at such control mode as velocity control or torque control, where no position command is required. • Permissible max. input frequency is 2Mpps. • You can select up to 6 command pulse input formats with Pr41 (Setup of command pulse rotational direction) and Pr42 (Setup of command pulse input mode). For details, refer to the table below, "Command pulse input format".	PI2 P.84
	45	PULSH2		
Command pulse sign input 1	46	SIGNH1		
	47	SIGNH2		

• Pulse train interface

Title of signal	Pin No.	Symbol	Function	I/F circuit
Command pulse input 2	1	OPC1	• Input terminal for the position command. You can select by setting up Pr40 (Selection of command pulse input) to 0. • This input becomes invalid at such control mode as the velocity control or torque control, where no position command is required. • Permissible max. input frequency is 500kpps at line driver input and 200kpps at open collector input. • You can select up to 6 command pulse input formats with Pr41 (Setup of command pulse rotational direction) and Pr42 (Setup of command pulse input mode). For details, refer to the table below, "Command pulse input format".	PI1 P.84
	3	PULS1		
	4	PULS2		
Command pulse sign input 2	2	OPC2		
	5	SIGN1		
	6	SIGN2		

• Command pulse input format

Pr41 Setup value (Setup of command pulse rotational direction)	Pr42 Setup value (Setup of command pulse input mode)	Command pulse format	Signal title	CCW command	CW command
0	0 or 2	2-phase pulse with 90° difference (A+ B-phase)	PULS SIGN	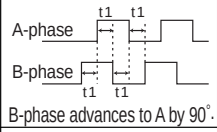	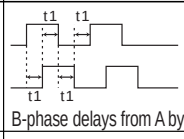
	1	CW pulse train + CCW pulse train	PULS SIGN	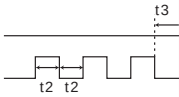	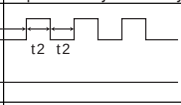
	3	Pulse train + Sign	PULS SIGN	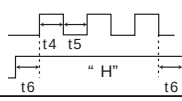	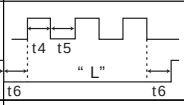
1	0 or 2	2-phase pulse with 90° difference (A+ B-phase)	PULS SIGN	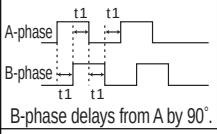	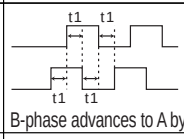
	1	CW pulse train + CCW pulse train	PULS SIGN	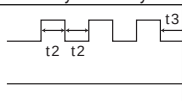	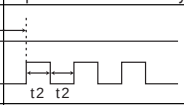
	3	Pulse train + Sign	PULS SIGN	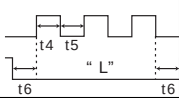	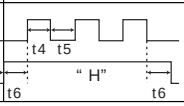

- PULS and SIGN represents the outputs of pulse train in put circuit. Refer to the fig. of P.84, "Input Circuit".
- In case of CW pulse train + CCW pulse train and pulse train + sign, pulse train will be cap tured at the rising edge.
- In case of 2-phase pulse, pulse train will be captured at each edge.

• Permissible max. input frequency of command pulse input signal and min. necessary time width

Input I/F of PULS/SIGN signal		Permissible max. input frequency	Minimum necessary time width					
			t_1	t_2	t_3	t_4	t_5	t_6
Pulse train interface exclusive for line driver		2Mpps	500ns	250ns	250ns	250ns	250ns	250ns
Pulse train interface	Line driver interface	500kpps	2μs	1μs	1μs	1μs	1μs	1μs
	Open collector interface	200kpps	5μs	2.5μs	2.5μs	2.5μs	2.5μs	2.5μs

Set up the rising/falling time of command pulse input signal to 0.1μs or shorter.

Wiring to the Connector, CN X5

Input Signals (Analog Command) and Their Functions

<table>
<tr><th>Title of signal</th><th>Pin No.</th><th>Symbol</th><th>Function</th><th>I/F circuit</th></tr>
<tr><td>Speed command input
or
Torque command input</td><td>14</td><td>SPR

TRQR</td><td>
• Function varies depending on control mode.
<table>
<tr><th>Pr02</th><th>Control mode</th><th>Function</th></tr>
<tr><td>3</td><td>Position/
Velocity</td><td>• Input of external speed command (SPR) when the velocity control is selected.
• Set up the gain, polarity, offset and filter of the Speed command with;
Pr50 (Speed command input gain)
Pr51 (Speed command input reversal)
Pr52 (Speed command offset)
Pr57 (Speed command filter setup)</td></tr>
<tr><td>4</td><td>Position/
Torque</td><td>• Function varies depending on Pr5B (Selection of torque command)
<table>
<tr><th>Pr5B</th><th>Content</th></tr>
<tr><td>0</td><td>• Torque command (TRQR) will be selected.
• Set up the torque (TRQR) gain, polarity, offset and filter with;
Pr5C (Torque command input gain)
Pr5D (Torque command input reversal)
Pr52 (Speed command offset)
Pr57 (Speed command filter setup)</td></tr>
<tr><td>1</td><td>• Speed limit (SPL) will be selected.
• Set up the speed limit (SPL) gain, offset and filter with;
Pr50 (Speed command input gain)
Pr52 (Speed command offset)
Pr57 (Speed command filter setup)</td></tr>
</table></td></tr>
<tr><td>Others</td><td>Other control mode</td><td>• This input is invalid.</td></tr>
</table>
•The resolution of the A/D converter used in this input is 16 bit (including 1 bit for sign).
± 32767 (LSB) = ± 10[V] , 1[LSB] = 0.3[mV]
</td><td>AI
P.84</td></tr>
</table>

*Function becomes valid when the control mode with underline (▭ / ▭)

<Remark>

Do not apply voltage exceeding ±10V to analog command input of SPR/TRQR.

<table>
<tr><th>Title of signal</th><th>Pin No.</th><th>Symbol</th><th>Function</th><th>I/F circuit</th></tr>
<tr><td>CCW-Torque limit input</td><td>16</td><td>CCWTL</td><td>• Function varies depending on Pr02 (Control mode setup).
<table>
<tr><th>Pr02</th><th>Control mode</th><th>Function</th></tr>
<tr><td>2
4</td><td>Torque Control
Position/Torque</td><td>• Function varies depending on Pr5B (Selection of torque command)
<table>
<tr><th>Pr5B</th><th>Content</th></tr>
<tr><td>0</td><td>This input becomes invalid.</td></tr>
<tr><td>1</td><td>• Torque command input (TRQR) will be selected.
• Set up the gain and polarity of the command with;
Pr5C (Torque command input gain)
Pr5D (Torque command input reversal)
• Offset and filter cannot be set up.</td></tr>
</table></td></tr>
<tr><td>5</td><td>Velocity/Torque</td><td>• Becomes to the torque command input (TRQR).
• Set up the gain and polarity of the command with;
Pr5C (Torque command input gain)
Pr5D (Torque command input reversal)
• Offset and filter cannot be set up.</td></tr>
<tr><td>4
5
Other</td><td>Position/Torque
Velocity/Torque
Other control mode</td><td>• Becomes to the analog torque limit input to CCW (CCWTL).
• Limit the CCW-torque by applying positive voltage (0 to +10V) (Approx.+3V/rated toque)
• Invalidate this input by setting up Pr03 (Torque limit selection) to other than 0.</td></tr>
</table>
• Resolution of A/D converter used in this input is 16 bit (including 1 bit for sign).
± 511 [LSB] ≒ 11.9[V] , 1 [LSB] ≒ 23[mV]</td><td>AI
P.84</td></tr>
<tr><td>CW-Torque limit input</td><td>18</td><td>CWTL</td><td>• Function varies depending on Pr02 (Control mode setup).
<table>
<tr><th>Pr02</th><th>Control mode</th><th>Function</th></tr>
<tr><td>2
4
5</td><td>Torque control
Position/Torque
Velocity/Torque</td><td>• This input becomes invalid when the torque control is selected.</td></tr>
<tr><td>4
5
Other</td><td>Position/Torque
Velocity/Torque
Other control mode</td><td>• Becomes to the analog torque limit input to CW (CWTL).
• Limit the CW-torque by applying negative voltage (0 to –10V) (Approx.+3V/rated toque).
Invalidate this input by setting up Pr03 (Torque limit selection) to other than 0.</td></tr>
</table>
• Resolution of A/D converter used in this input is 16 bit (including 1 bit for sign).
± 511 [LSB] ≒ 11.9[V] , 1 [LSB] ≒ 23[mV]</td><td>AI
P.84</td></tr>
</table>

*Function becomes valid when the control mode with underline (▭ / ▭) is selected while the switching mode is used in the control mode in table.

<Remark>

Do not apply voltage exceeding ±10V to analog command input of CWTL and CCWTL

Wiring to the Connector, CN X5

Output signal and Pin No. of the Connector, CN X5

Output Signals (Common) and Their Functions

Title of signal	Pin No	Symbol	Function	I/F circuit
External brake release signal	**11** **10**	**BRKOFF+** **BRKOFF–**	• Feeds out the timing signal which activates the electromagnetic brake of the motor. • Turns the output transistor ON at the release timing of the electro-magnetic brake. • You can set up the output timing of this signal with Pr6A (Setup of mechanical brake action at stall) and Pr6B (Setup of mechanical brake action at motion). For details, refer to P42, "Timing Chart" of Preparation.)	SO1 P.85
Servo-Ready output	**35** **34**	**S-RDY+** **S-RDY–**	• This signal shows that the driver is ready to be activated. • Output transistor turns ON when both control and main power are ON but not at alarm status.	SO1 P.85
Servo-Alarm output	**37** **36**	**ALM+** **ALM–**	• This signal shows that the driver is in alarm status.. • Output transistor turns ON when the driver is at normal status, and turns OFF at alarm status.	SO1 P.85
Positioning complete (In-position)	**39** **38**	**AT-SPEED+** **AT-SPEED–**	• Function varies depending on the control mode. **Position control**: • Output of positioning complete (COIN) • The output transistor will turn ON when the absolute value of the position deviation pulse becomes smaller than the setup value of Pr60 (Positioning complete range). • You can select the feeding out method with Pr63 (Setup of positioning complete output). **Full-closed control**: • Output of full-closed positioning complete (EX-COIN) • The output transistor will turn ON when the absolute value of full-closed-position deviation pulse becomes smaller than the setup value of Pr60 (Positioning complete range). • You can select the feeding out method with Pr63 (Setup of positioning complete output). **Velocity/ Torque control**: • Output at-speed (speed arrival) (AT-SPEED) • The output transistor will turn ON when the actual motor speed exceeds the setup value of Pr62 (In-speed).	SO1 P.85
Zero-speed detection output signal	**12** **(41)**	**ZSP** **(COM–)**	• Content of the output signal varies depending on Pr0A (Selection of ZSP output). • Default is 1, and feeds out the zero speed detection signal. • For details, see the table below, "Selection of TLC,ZSP output".	SO2 P.85
Torque in-limit signal output	**40** **(41)**	**TLC** **(COM–)**	• Content of the output signal varies depending on Pr09 (Selection of TLC output). • Default is 1, and feeds out the torque in-limit signal. • For details, see the table below, "Selection of TLC,ZSP output".	SO2 P.85

• Selection of TCL and ZSP outputs

Value of Pr09 or Pr0A	X5 TLC : Output of Pin-40	X5 ZSP : Output of Pin-12
0	**• Torque in-limit output (Default of X5 TLC Pr09)** The output transistor turns ON when the torque command is limited by the torque limit during Servo-ON.	
1	**• Zero-speed detection output (Default of X5 ZSP Pr0A)** The output transistor turns ON when the motor speed falls under the preset value with Pr61.	
2	**• Alarm signal output** The output transistor turns ON when either one of the alarms is triggered, over-regeneration alarm, overload alarm, battery alarm, fan-lock alarm or external scale alarm.	
3	**• Over-regeneration alarm** The output transistor turns ON when the regeneration exceeds 85% of the alarm trigger level of the regenerative load protection.	
4	**• Over-load alarm** The output transistor turns ON when the load exceeds 85% of the alarm trigger level of the overload alarm.	
5	**• Battery alarm** The output transistor turns ON when the battery voltage for absolute encoder falls lower than approx. 3.2V.	
6	**• Fan-lock alarm** The output transistor turns ON when the fan stalls for longer than 1s.	
7	**• External scale alarm** The output transistor turns ON when the external scale temperature exceeds 65°, or signal intensity is not enough (adjustment on mounting is required). Valid only at the full-closed control.	
8	**• In-speed (Speed coincidence) output** The output transistor turns ON when the difference between the actual motor speed and the speed command before acceleration/deceleration reaches within the preset range with Pr61. Valid only at the velocity and torque control.	

Output Signals (Pulse Train) and Their Functions

Title of signal	Pin No	Symbol	Function	I/F circuit
A-phase output	21	OA +	• Feeds out the divided encoder signal or external scale signal (A, B, Z-phase) in differential. (equivalent to RS422) • You can set up the division ratio with Pr44 (Numerator of pulse output division) and Pr45 (Denominator of pulse output division) • You can select the logic relation between A-phase and B-phase, and the output source with Pr46 (Reversal of pulse output logic). • When the external scale is made as an output source, you can set up the interval of Z-phase pulse output with Pr47 (Setup of external scale Z-phase). • Ground for line driver of output circuit is connected to signal ground (GND) and is not insulated. • Max. output frequency is 4Mpps (after quadrupled)	PO1 P.85
	22	OA –		
B-phase output	48	OB +		
	49	OB –		
Z-phase output	23	OZ +		
	24	OZ –		
Z-phase output	19	CZ	• Open collector output of Z-phase signal • The emitter side of the transistor of the output circuit is connected to the signal ground (GND) and is not insulated.	PO2 P.85

<Note>

• When the output source is the encoder

• If the encoder resolution $\times \frac{Pr44}{Pr45}$ is multiple of 4, Z-phase will be fed out synchronizing with A-phase.

In other case, the Z-phase width will be equal to the encoder resolution, and will not synchronize with A-phase because of narrower width than that of A-phase.

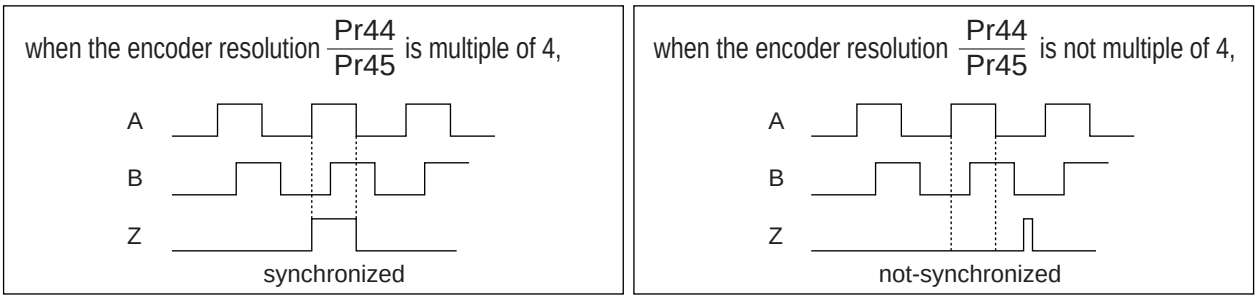

• In case of the 5-wire, 2500P/r incremental encoder, the signal sequence might not follow the above fig. until the first Z-phase is fed out. When you use the pulse output as the control signal, rotate the motor one revolution or more to make sure that the Z-phase is fed out at least once before using.

Wiring to the Connector, CN X5

Output Signals (Analog) and Their Functions

<table>
<tr><th>Title of signal</th><th>Pin No</th><th>Symbol</th><th>Function</th><th>I/F circuit</th></tr>
<tr><td>Torque monitor signal output</td><td>42</td><td>IM</td><td>• The content of output signal varies depending on Pr08 (Torque monitor (IM) selection).
• You can set up the scaling with Pr08 value.
<table>
<tr><th>Pr08</th><th>Content of signal</th><th>Function</th></tr>
<tr><td>0,
11,12</td><td>Torque command</td><td>• Feeds out the voltage in proportion to the motor torque command with polarity.
+ : generates CCW torque
– : generates CW torque</td></tr>
<tr><td>1 – 5</td><td>Positional deviation</td><td>• Feeds out the voltage in proportion to the positional deviation pulse counts with polarity.
+ : positional command to CCW of motor position
– : positional command to CW of motor position</td></tr>
<tr><td>6 –10</td><td>Full-closed deviation</td><td>• Feeds out the voltage in proportion to the full-closed deviation pulse counts with polarity.
+ : positional command to CCW of external scale position
– : positional command to CW of external scale position</td></tr>
</table></td><td>AO
P.85</td></tr>
<tr><td>Speed monitor signal output</td><td>43</td><td>SP</td><td>• The content of the output signal varies depending on Pr07 (Speed monitor (IM) selection).
• You can set up the scaling with Pr07 value.
<table>
<tr><th>Pr07</th><th>Control mode</th><th>Function</th></tr>
<tr><td>0 – 4</td><td>Motor speed</td><td>• Feeds out the voltage in proportion to the motor speed with polarity. + : rotates to CCW
– : rotates to CW</td></tr>
<tr><td>5 – 9</td><td>Command speed</td><td>• Feeds out the voltage in proportion to the command speed with polarity.
+ : rotates to CCW
– : rotates to CW</td></tr>
</table></td><td>AO
P.85</td></tr>
</table>

Output Signals (Others) and Their Functions

Title of signal	Pin No	Symbol	Function	I/F circuit
Signal ground	**13,15, 17,25**	**GND**	• Signal ground • This output is insulated from the control signal power (COM–) inside of the driver.	–
Frame ground	**50**	**FG**	• This output is connected to the earth terminal inside of the driver.	–

Wiring to the Connector, CN X5

Connecting Example to Host Controller

Matsushita Electric Works, FPG-C32T

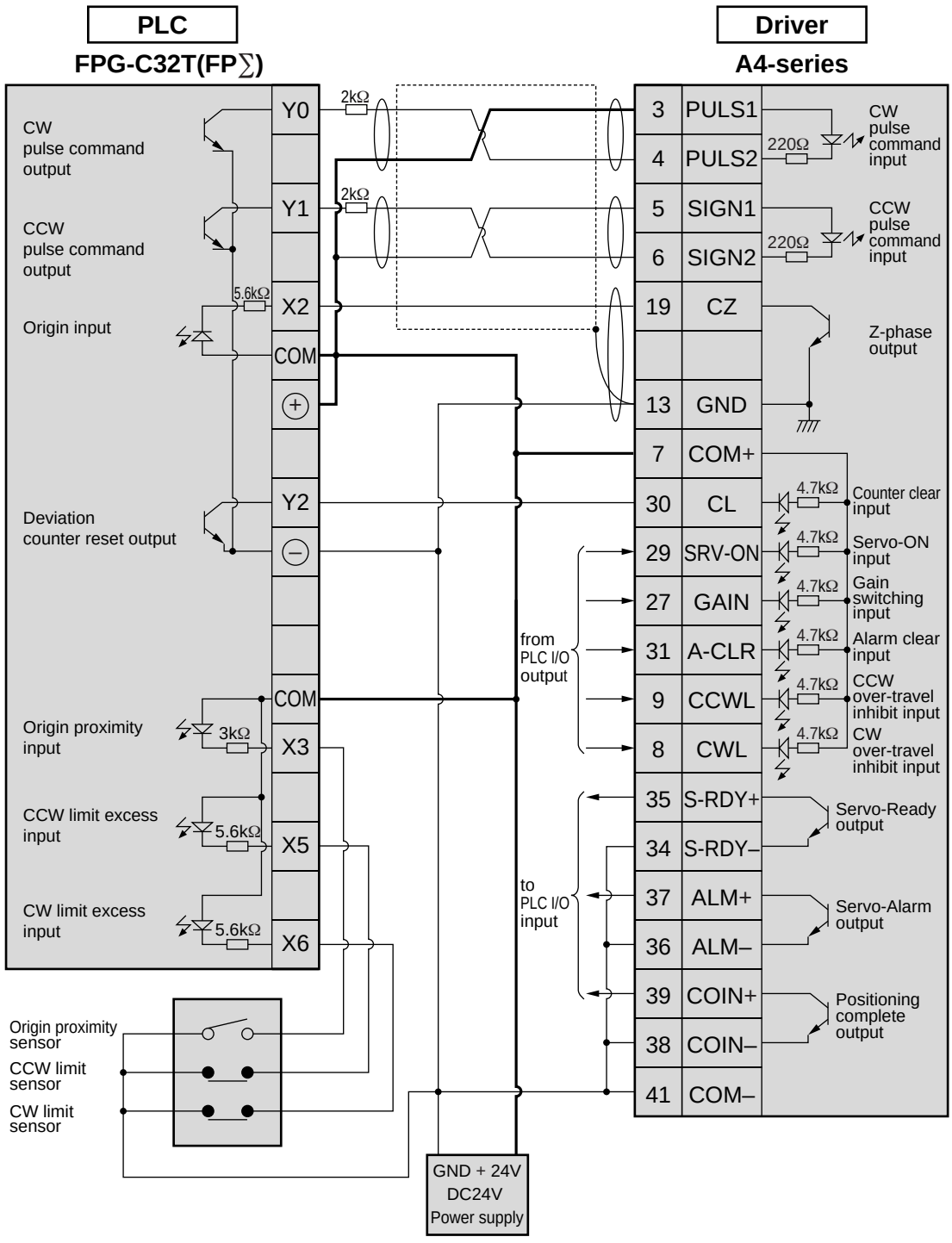

<Remark>

represents twisted pair wire.

Matsushita Electric Works, FP2-PP2 AFP2430

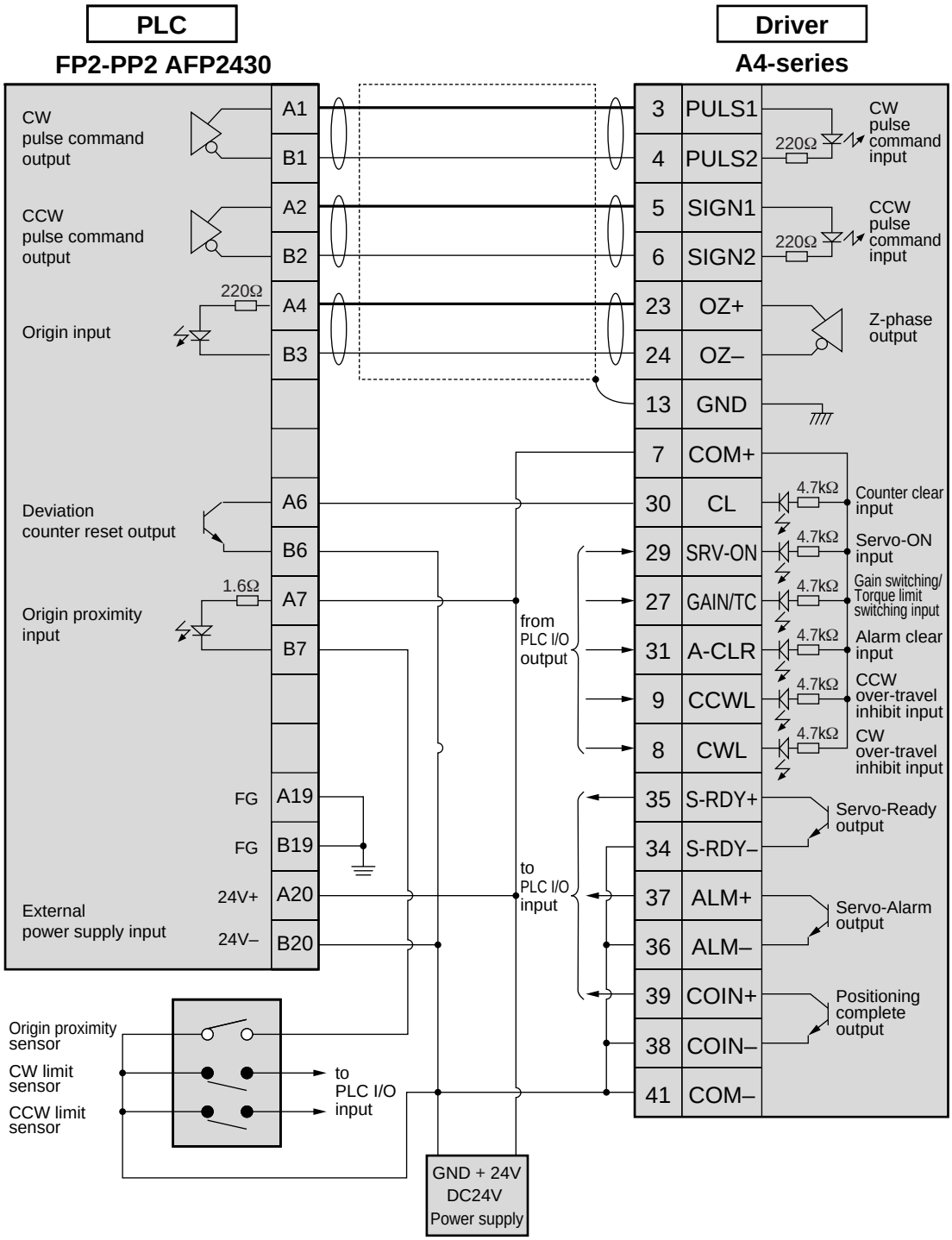

<Remark>

represents twisted pair wire.

Wiring to the Connector, CN X5

Yokogawa Electric , F3NC11-ON

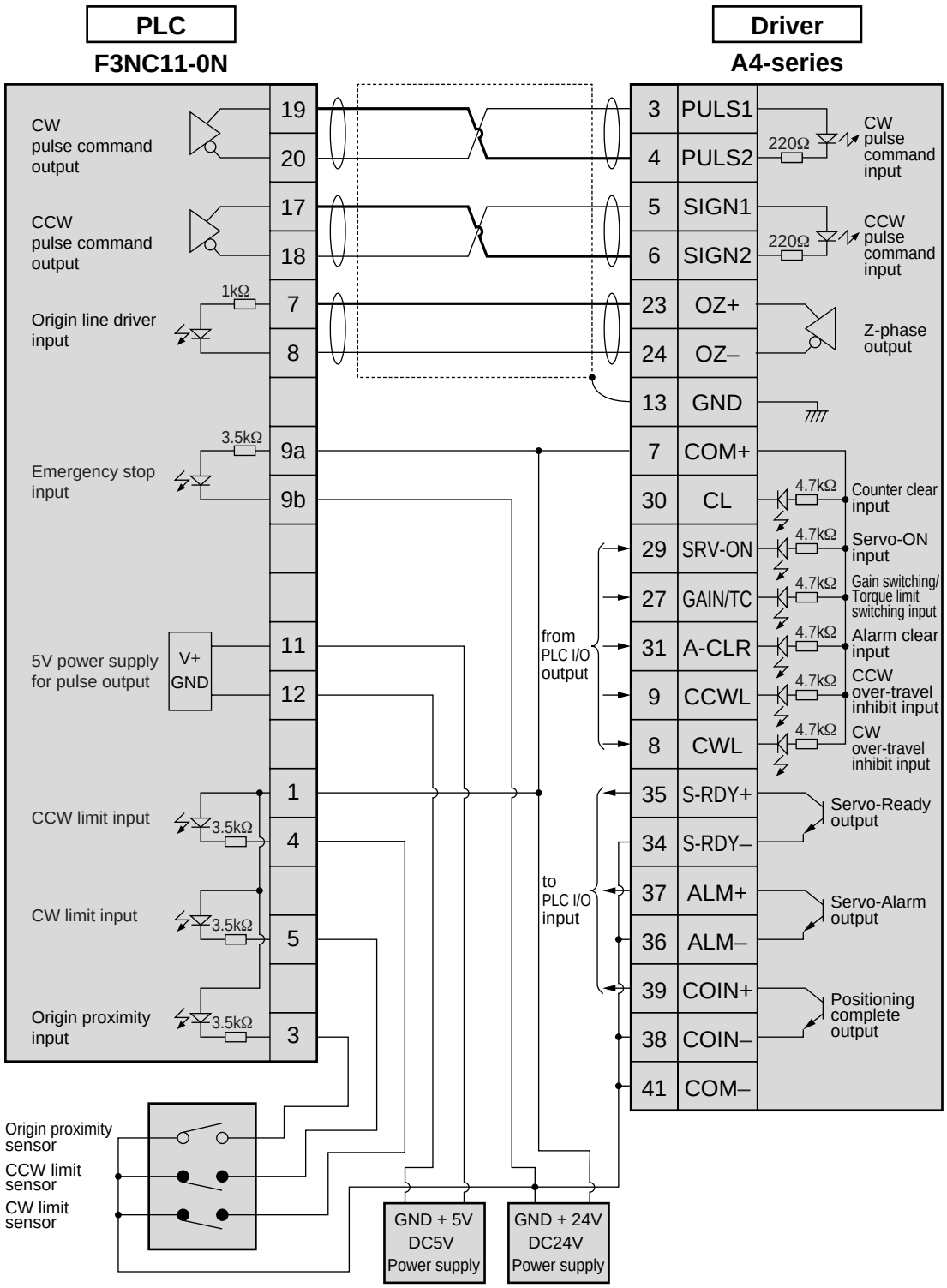

<Remark>

represents twisted pair wire.

Yokogawa Electric , F3YP14-0N/F3YP18-0N

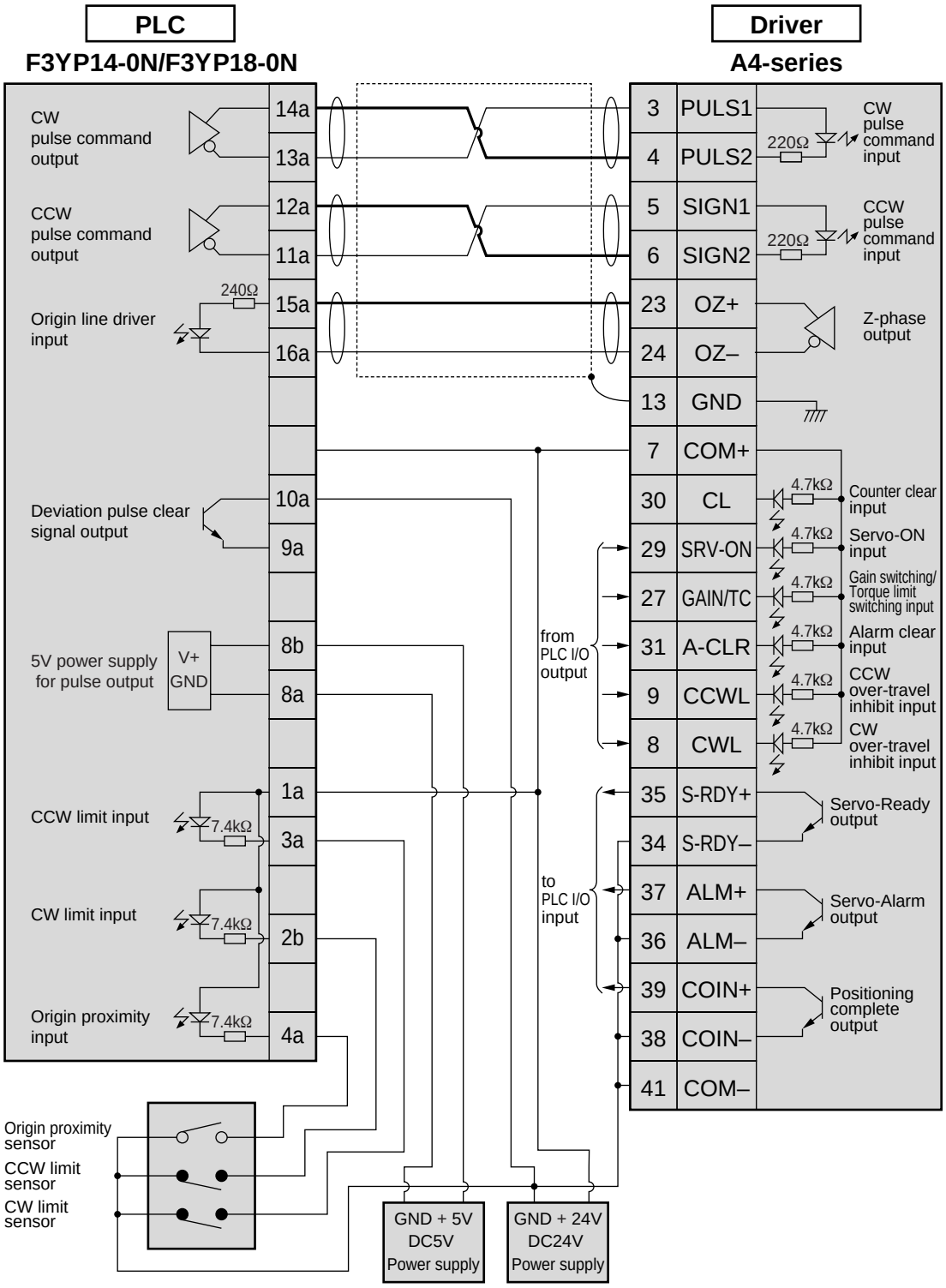

<Remark>

represents twisted pair wire.

Wiring to the Connector, CN X5

Omron, CS1W-NC113

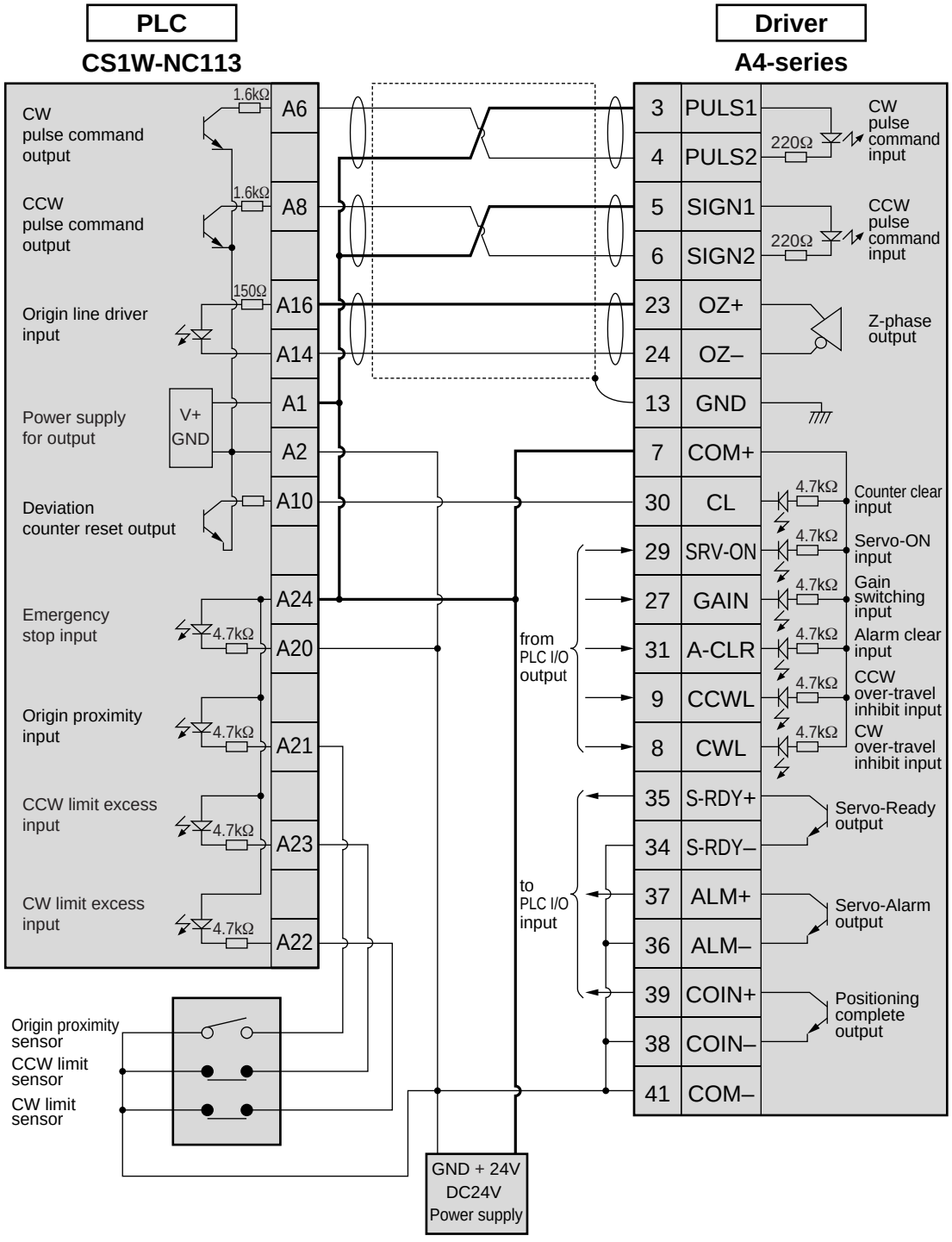

<Remark>

represents twisted pair wire.

Omron, CS1W-NC133

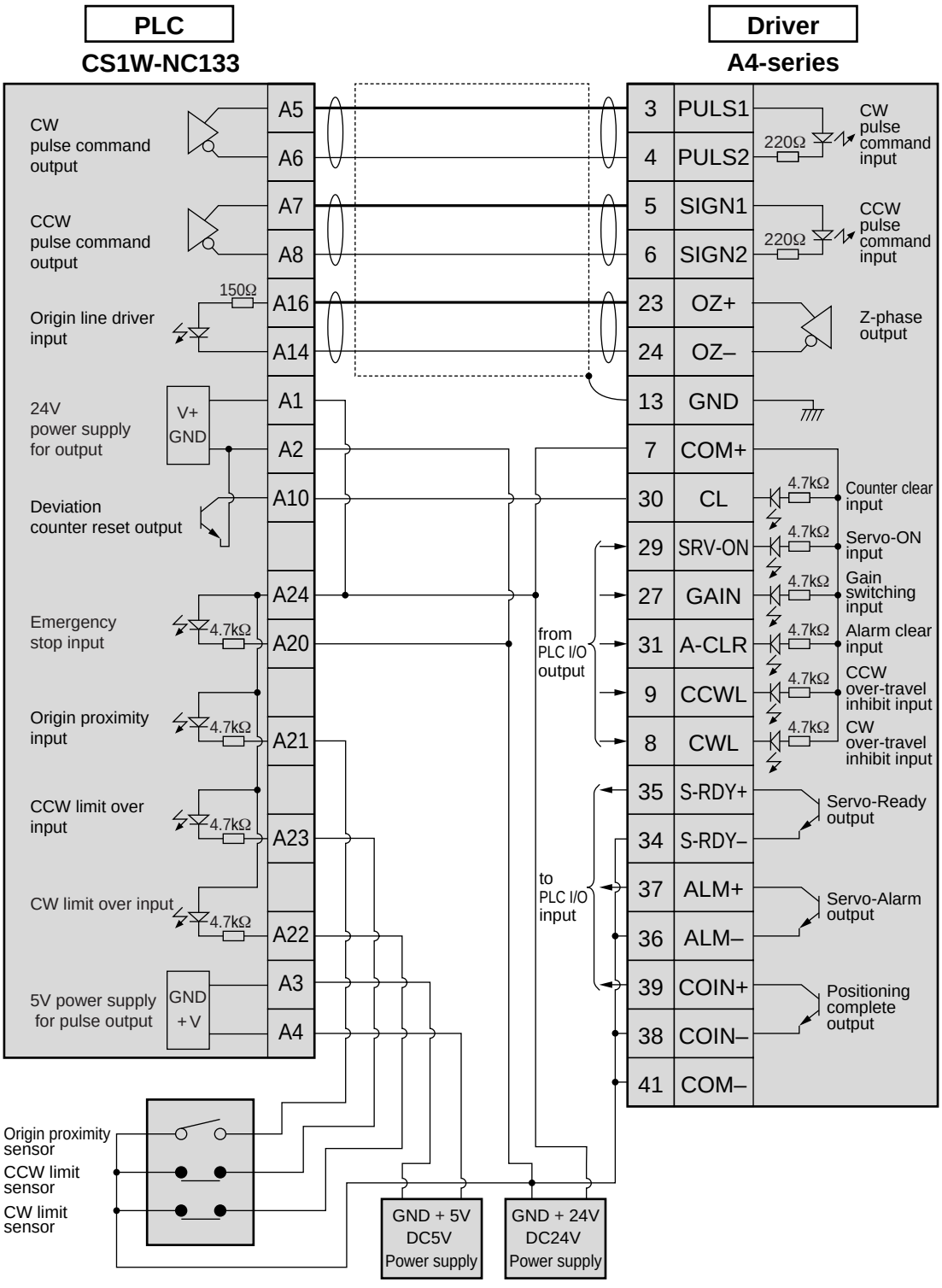

<Remark>

represents twisted pair wire.

Wiring to the Connector, CN X5

Omron, C200H-NC211

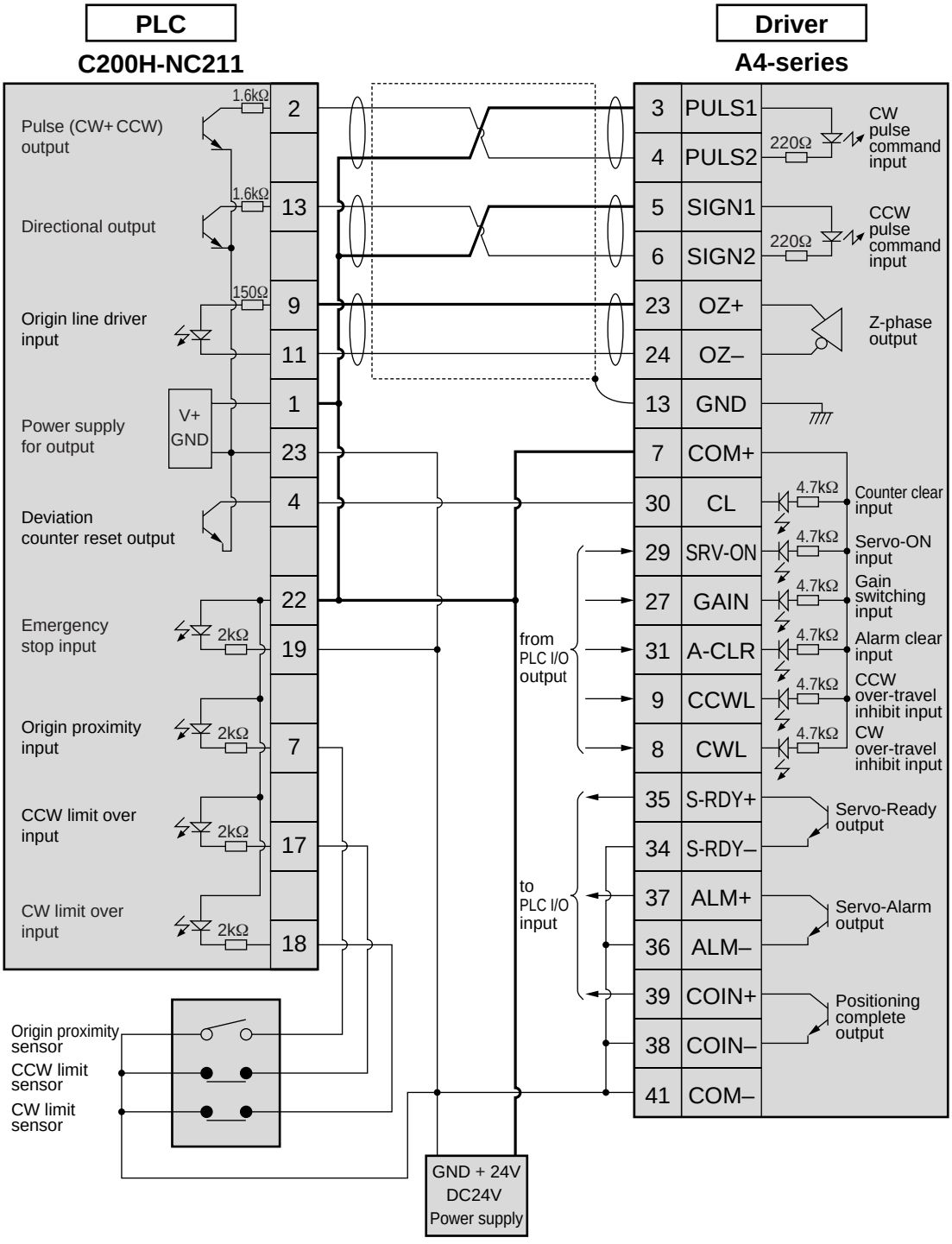

<Remark>

represents twisted pair wire.

Mitsubishi, A1SD75/AD75P1

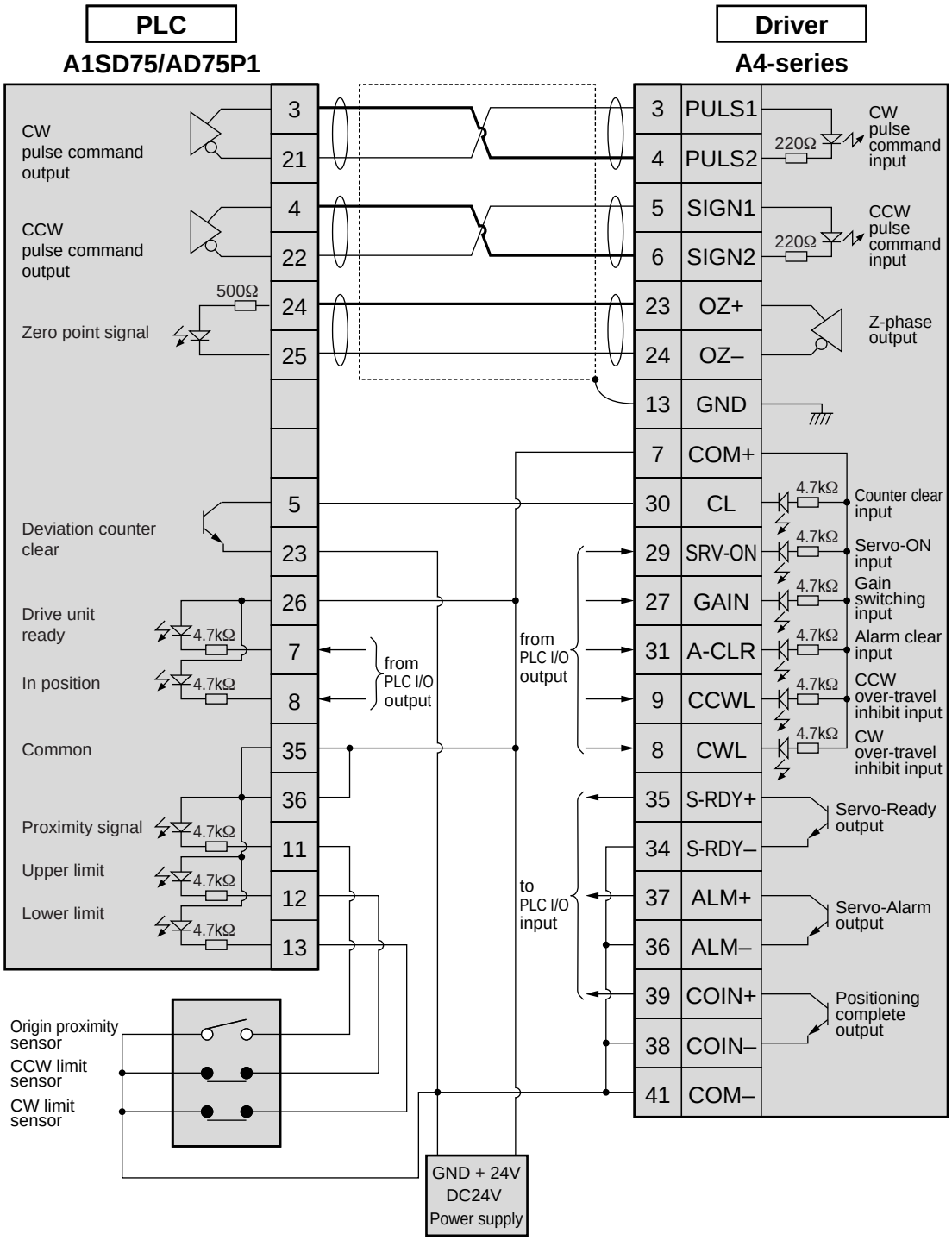

<Remark>

represents twisted pair wire.

Trial Run (JOG run) at Position Control Mode

Inspection Before Trial Run

(1) Wiring inspection
- Miswiring
  (Especially power input/motor output)
- Short/Earth
- Loose connection

(2) Check of power/voltage
- Rated voltage

(3) Fixing of the motor
- Unstable fixing

(4) Separation from mechanical system

(5) Release of the brake

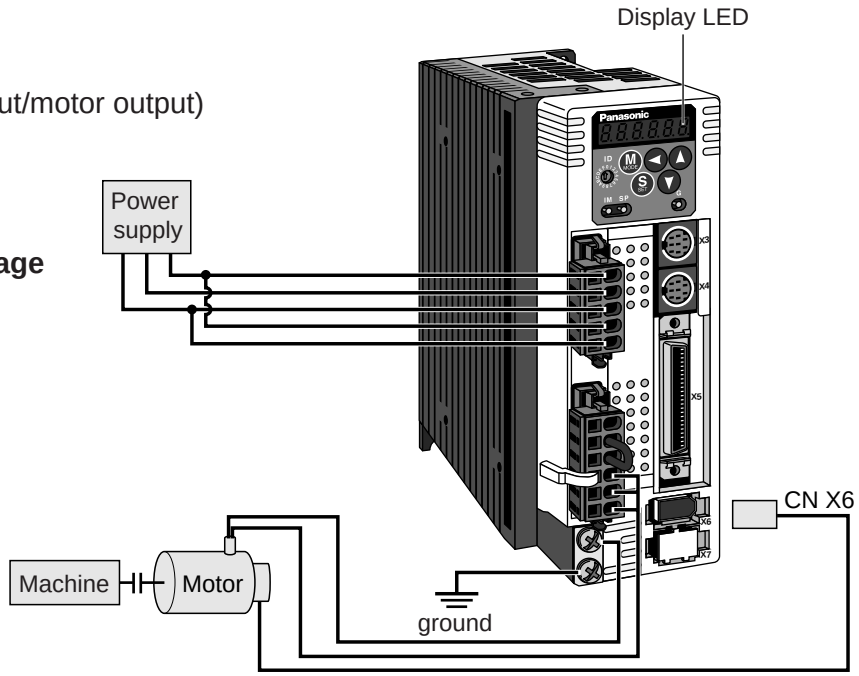

Trial Run by Connecting the Connector, CN X5

(1) Connect the CN X5.
(2) Enter the power (DC12 to 24V) to control signal (COM+ , COM–)
(3) Enter the power to the driver.
(4) Confirm the default values of parameters.
(5) Match to the output format of the host controller with Pr42 (Command pulse input mode setup).
(6) Write to EEPROM and turn off/on the power (of the driver).
(7) Connect the Servo-ON input (SRV-ON, CN X5, Pin-29) and COM– (CN X5, Pin-41) to bring the driver to Servo-ON status and energize the motor.
(8) Enter low frequency from the host controller to run the motor at low speed.
(9) Check the motor rotational speed at monitor mode whether,
rotational speed is as per the setup or not, and
the motor stops by stopping the command (pulse) or not.
(10) If the motor does not run correctly, refer to P.68, "Display of Factor for No-Motor Running" of Preparation.

Wiring Diagram

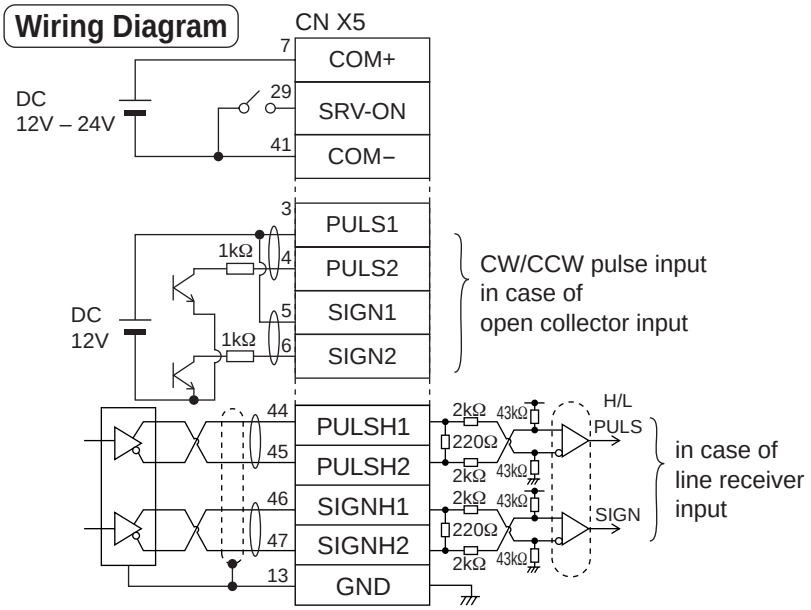

Parameter

PrNo.	Title	Setup value
02	Setup of control mode	0
04	Invalidation of over-travel inhibit input	1
40	Selection of command pulse input	0/1
42	Mode setup of command pulse input	1
43	Inhibition setup of command pulse input	1
4E	Counter clear mode	2

• Enter command pulses from the host controller.

Input signal status

No.	Title of signal	Monitor display
0	Servo-ON	+ A

Setup of Motor Rotational Speed and Input Pulse Frequency

Input pulse frequency (pps)	Motor rotational speed (r/min)	$\frac{Pr48 \times 2^{Pr4A}}{Pr4B}$	
		17-bit	2500P/r
2M	3000	$\frac{1 \times 2^{15}}{10000}$	$\frac{2500 \times 2^{0}}{10000}$
500K	3000	$\frac{1 \times 2^{17}}{10000}$	$\frac{10000 \times 2^{0}}{10000}$
250K	3000	$\frac{1 \times 2^{17}}{5000}$	$\frac{10000 \times 2^{0}}{5000}$
100K	3000	$\frac{1 \times 2^{17}}{2000}$	$\frac{10000 \times 2^{0}}{2000}$
500K	1500	$\frac{1 \times 2^{16}}{10000}$	$\frac{50000 \times 2^{0}}{10000}$

<Note>

Defaults of Pr48 and Pr49 are both 0, and encoder resolution is automatically set up as numerators.Defaults of Pr48 and Pr49 are both 0, and encoder resolution is automatically set up as numerators.

<Remarks>

- Max. input pulse frequency varies depending on input terminals.
- You can set up any values to numerator and denominator, however, setup of an extreme division ratio or multiplication ratio may result in dangerous action. Recommended ratio is 1/50-20.

Relation between the motor rotational speed and input pulse counts

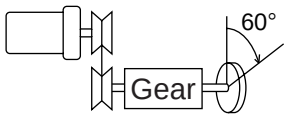

Pulley ratio : $\frac{18}{60}$

Gear ratio : $\frac{12}{73}$

Total reduction ratio : $\frac{18}{365}$

e.g.) When you want to rotate the motor by 60˚ with the load of total reduction ratio of 18/365.

	Encoder	
	17-bit	2500P/r
$\frac{Pr48 \times 2^{Pr4A}}{Pr4B}$	$\frac{365 \times 2^{10}}{6912}$	$\frac{365 \times 2^{0}}{108}$
Command pulse	To rotate the output shaft by 60˚, enter the command of 8192 (2^{13}) pulses from the host controller.	To rotate the output shaft by 60˚, enter the command of 10000 pulses from the host controller.
How to determine parameter	$\frac{365}{18} \times \frac{1 \times 2^{17}}{2^{13}} \times \frac{60^{\circ}}{360^{\circ}}$ $= \frac{365 \times 2^{17}}{884736}$ Hence the obtained numerator becomes 47841280>2621440 and denominator exceeds the max value of 10000, you have to reduce to the common denominator to obtain. $\frac{365}{18} \times \frac{1 \times 2^{10}}{2^{6}} \times \frac{60^{\circ}}{360^{\circ}}$ $= \frac{365 \times 2^{10}}{6912}$	$\frac{365}{18} \times \frac{10000}{10000} \times \frac{60^{\circ}}{360^{\circ}}$ $= \frac{365 \times 2^{0}}{108}$

2^n	Decimal figures
2^0	1
2^1	2
2^2	4
2^3	8
2^4	16
2^5	32
2^6	64
2^7	128
2^8	256
2^9	512
2^{10}	1024
2^{11}	2048
2^{12}	4096
2^{13}	8192
2^{14}	16384
2^{15}	32768
2^{16}	65536
2^{17}	131072

*Refer to P.306 "Division Ratio for Parameters" of Supplement.

Real-Time Auto-Gain Tuning

Outline

The driver estimates the load inertia of the machine in real time, and automatically sets up the optimum gain responding to the result. Also the driver automatically suppress the vibration caused by the resonance with an adaptive filter.

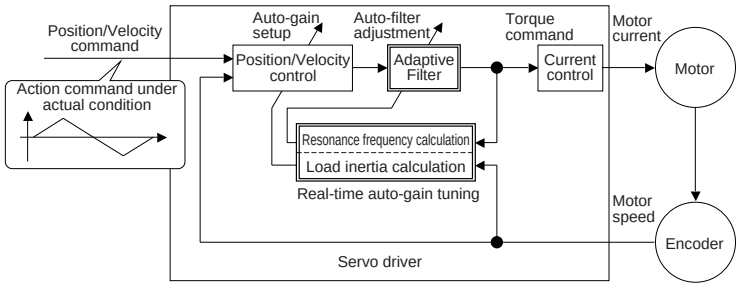

Applicable Range

- Real-time auto-gain tuning is applicable to all control modes.

Caution

Real-time auto-gain tuning may not be executed properly under the conditions described in the right table. In these cases, use the normal mode auto-gain tuning (refer to P.236 of Adjustment), or execute a manual gain tuning. (refer to P.240, of Adjustment)

	Conditions which obstruct real-time auto-gain tuning
Load inertia	• Load is too small or large compared to rotor inertia. (less than 3 times or more than 20 times) • Load inertia change too quickly. (10 [s] or less)
Load	• Machine stiffness is extremely low. • Chattering such as backlash exists.
Action pattern	• Motor is running continuously at low speed of 100 [r/min] or lower. • Acceleration/deceleration is slow (2000[r/min] per 1[s] or low). • Acceleration/deceleration torque is smaller than unbalanced weighted/viscous friction torque. • When speed condition of 100[r/min] or more and acceleration/deceleration condition of 2000[r/min] per 1[s] are not maintained for 50[ms] .

How to Operate

(1) Bring the motor to stall (Servo-OFF).
(2) Set up Pr21 (Real-time auto-gain tuning mode setup) to 1-7. Default is 1.

Setup value	Real-time auto-gain tuning	Varying degree of load inertia in motion
0	(not in use)	–
<1>	normal mode	no change
2		slow change
3		rapid change
4	vertical axis mode	no change
5		slow change
6		rapid change
7	no-gain switching mode	no change

- When the varying degree of load inertia is large, set up 3 or 6.
- When the motor is used for vertical axis, set up 4-6.
- When vibration occurs during gain switching, set up 7.
- When resonance might give some effect, validate the setup of Pr23 (Setup of adaptive filter mode).

(3) Set up Pr22 (Machine stiffness at real-time auto-gain tuning) to 0 or smaller value.
(4) Turn to Servo-ON to run the machine normally.
(5) Gradually increase Pr22 (Machine stiffness at real-time auto-gain tuning) when you want to obtain better response. Lower the value (0 to 3) when you experience abnormal noise or oscillation.
(6) Write to EEPROM when you want to save the result.

Insert the console connector to CN X6 of the driver, then turn on the driver power. → r 0

Setup of parameter, Pr21

Press (S). → dP_SPd
Press (M). → PA_ 00
Match to the parameter No. to be set up with (▲) (▼). (Here match to Pr21.) → PA_ 21
Press (S). → 1
Change the setup with (▲) (▼).
Press (S). → PA_ 21

Setup of parameter, Pr22

Match to Pr22 with (▲). → PA_ 22
Press (S). → 4 (default values)
Numeral increases with (▲), and decreases with (▼).
Press (S).

Writing to EEPROM

Press (M). → EE_SEt
Press (S). → EEP -
Bars increase as the right fig. shows by keep pressing (▲) (approx. 5sec). → EEP --
→ ------
Writing starts (temporary display). → StArt

Finish → FinISh (Writing completes) / rESEt / Error (Writing error occurs)

Return to SELECTION display after writing finishes, referring to "Structure of each mode"(P.60 and 61 of Preparation).

Adaptive Filters

The adaptive filter is validated by setting up Pr23 (Setup of adaptive filter mode) to other than 0.
The adaptive filter automatically estimates a resonance frequency out of vibration component presented in the motor speed in motion, then removes the resonance components from the torque command by setting up the notch filter coefficient automatically, hence reduces the resonance vibration.
The adaptive filter may not operate property under the following conditions. In these cases, use 1st notch filter (Pr1D and 1E) and 2nd notch filter (Pr28-2A) to make measures against resonance according to the manual adjusting procedures.
For details of notch filters, refer to P.246, "Suppression of Machine Resonance" of Adjustment.

	Conditions which obstruct adaptive filter action
Resonance point	• When resonance frequency is lower than 300[Hz] . • While resonance peak is low or control gain is small and when no affect from these condition is given to the motor speed. • When multiple resonance points exist.
Load	• When the motor speed variation with high frequency factor is generated due to non-linear factor such as backlash.
Command pattern	• When acceleration/deceleration is very extreme such as more than 30000 [r/min] per 1 [s] .

<Note>
Even though Pr23 is set up to other than 0, there are other cases when adaptive filter is automatically invalidated. Refer to P.235, "Invalidation of adaptive filter" of Adjustment.

Parameters Which Are Automatically Set Up.

Following parameters are automatically adjusted.

PrNo.	Title
10	1st gain of position loop
11	1st gain of velocity loop
12	1st time constant of velocity loop integration
13	1st filter of velocity detection
14	1st time constant of torque filter
18	2nd gain of position loop
19	2nd gain of velocity loop
1A	2nd time constant of velocity loop integration
1B	2nd filter of speed detection
1C	2nd time constant of torque filter
20	Inertia ratio
2F	Adaptive filter frequency

Also following parameters are automatically set up.

PrNo.	Title	Setup value
15	Velocity feed forward	300
16	Time constant of feed forward filter	50
27	Setup of instantaneous speed observer	0
30	2nd gain setup	1
31	1st mode of control switching	10
32	1st delay time of control switching	30
33	1st level of control switching	50
34	1st hysteresis of control switching	33
35	Position gain switching time	20
36	2nd mode of control switching	0

<Notes>
- When the real-time auto-gain tuning is valid, you cannot change parameters which are automatically adjusted.
- Pr31 becomes 10 at position or full closed control and when Pr21 (Setup of Real-Time Auto-Gain Tuning Mode) is 1 to 6, and becomes 0 in other cases.

Cautions

(1) After the start-up, you may experience abnormal noise and oscillation right after the first Servo-ON, or when you increase the setup of Pr22 (Selection of machine stiffness at real-time auto-gain tuning), until load inertia is identified (estimated) or adaptive filter is stabilized, however, these are not failures as long as they disappear immediately. If they persist over 3 reciprocating operations, take the following measures in possible order.
   1) Write the parameters which have given the normal operation into EEPROM.
   2) Lower the setup of Pr22 (Selection of machine stiffness at real-time auto-gain tuning).
   3) Set up both Pr21 (Setup of real-time auto-gain tuning) and Pr23 (Setup of adaptive filter mode) to 0, then set up other value than 0. (Reset of inertia estimation and adaptive action)
   4) Invalidate the adaptive filter by setting up Pr23 (Setup of adaptive filter mode setup) to 0, and set up notch filter manually.
(2) When abnormal noise and oscillation occur, Pr20 (Inertia ratio) or Pr2F (Adaptive filter frequency) might have changed to extreme values. Take the same measures as the above in these cases.
(3) Among the results of real-time auto-gain tuning, Pr20 (Inertia ratio) and Pr2F (Adaptive filter frequency) will be written to EEPROM every 30 minutes. When you turn on the power again, auto-gain tuning will be executed using the latest data as initial values.
(4) When you validate the real-time auto-gain tuning, Pr27 (Setup of instantaneous speed observer) will be invalidated automatically.
(5) The adaptive filter is normally invalidated at torque control, however, when you select torque control while you set up Pr02 (Control mode setup) to 4 and 5, the adaptive filter frequency before mode switching will be held.
(6) During the trial run and frequency characteristics measurement of "PANATERM®", the load inertia estimation will be invalidated.

Parameter Setup

Parameters for Functional Selection

Standard default : < >

PrNo.	Title	Setup range	Function/Content
00 *	Address	0 to 15 <1>	In the communication with the host via RS232/485 for multi-axes application, it is necessary to identify which axis the host is communicating. Use this parameter to confirm the address of the axis in numbers.
01 *	LED initial status	0 to 17 <1>	You can select the type of data to be displayed on the front panel LED (7 segment) at the initial status after power-on.
02 *	Setup of control mode	0 to 6 <1>	You can set up the control mode to be used.

- The address is determined by the setup value of rotary switch (0 to F) of the front panel at power-on.
- This value becomes the axis number at serial communication.
- The setup value of this parameter has no effect to the servo action.
- You cannot change the setup of Pr00 with other means than rotary switch.

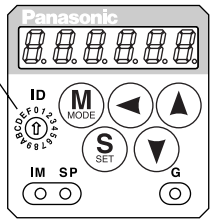

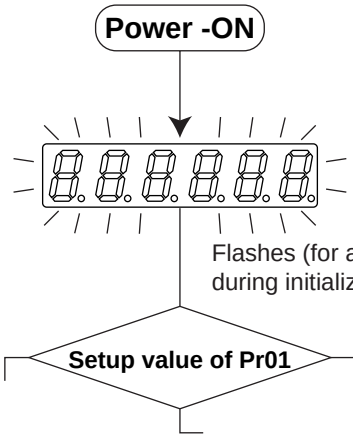

Setup value	Content
0	Positional deviation
<1>	Motor rotational speed
2	Torque output
3	Control mode
4	I/O signal status
5	Error factor/history
6	Software version
7	Alarm
8	Regenerative load factor
9	Over-load factor
10	Inertia ratio
11	Sum of feedback pulses
12	Sum of command pulses
13	External scale deviation
14	Sum of external scale feedback pulses
15	Motor automatic recognizing function
16	Analog input value
17	Factor of "No-Motor Running"

For details of display, refer to P.51 "Setup of Parameter and Mode" of Preparation.

Setup value	Control mode	
	1st mode	2nd mode
0	Position	–
<1>	Velocity	–
2	Torque	–
3 **1	Position	Velocity
4 **1	Position	Torque
5 **1	Velocity	Torque
6	Full-closed	–

**1) When you set up the combination mode of 3, 4 or 5, you can select either the 1st or the 2nd with control mode switching input (C-MODE).
When C-MODE is open, the 1st mode will be selected.
When C-MODE is shorted, the 2nd mode will be selected.
Don't enter commands 10ms before/after switching.

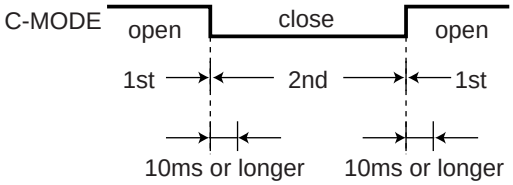

<Notes>

- For parameters which No. have a suffix of "*", changed contents will be validated when you turn on the control power.

Standard default : < >

<table>
<tr><th>PrNo.</th><th>Title</th><th>Setup range</th><th>Function/Content</th></tr>
<tr><td>03</td><td>Selection of torque limit</td><td>0 to 3
<1></td><td>You can set up the torque limiting method for CCW/CW direction.
<table>
<tr><th>Setup value</th><th>CCW</th><th>CW</th></tr>
<tr><td>0</td><td>X5 CCWTL : Pin-16</td><td>X5 CWTL : Pin-18</td></tr>
<tr><td><1></td><td colspan="2">Pr5E is a limit value for both CCW and CW direction</td></tr>
<tr><td>2</td><td>Set with Pr5E</td><td>Set with Pr5F</td></tr>
<tr><td>3</td><td colspan="2">When GAIN/TL-SEL input is open, set with Pr5E
When GAIN/TL-SEL input is shorted, set with Pr5F</td></tr>
</table>
When the setup value is 0, CCWTL and CWTL will be limited by Pr5E (1st torque limit setup). At the torque control, Pr5E becomes the limiting value for CCW/CW direction regardless of the setup of this parameter.</td></tr>
<tr><td>04
*</td><td>Setup of over-travel inhibit input</td><td>0 to 2
<1></td><td>In linear drive application, you can use this over-travel inhibiting function to inhibit the motor to run to the direction specified by limit switches which are installed at both ends of the axis, so that you can prevent the work load from damaging the machine due to the over-travel. With this input, you can set up the action of over-travel inhibit input.
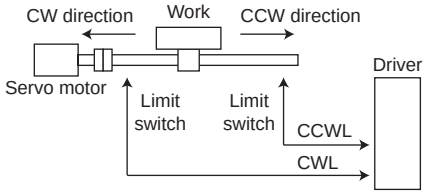

<table>
<tr><th>Setup value</th><th>CCWL/CWL input</th><th colspan="2">Input</th><th>Action</th></tr>
<tr><td rowspan="4">0</td><td rowspan="4">Valid</td><td rowspan="2">CCWL
(CN X5,Pin-9)</td><td>Close</td><td>Normal status while CCW-side limit switch is not activated.</td></tr>
<tr><td>Open</td><td>Inhibits CCW direction, permits CW direction.</td></tr>
<tr><td rowspan="2">CWL
(CN X5,Pin-9)</td><td>Close</td><td>Normal status while CW-side limit switch is not activated.</td></tr>
<tr><td>Open</td><td>Inhibits CW direction, CCW direction permitted.</td></tr>
<tr><td><1></td><td>Invalid</td><td colspan="3">Both CCWL and CWL inputs will be ignored, and over-travel inhibit function will be invalidated.</td></tr>
<tr><td>2</td><td>Valid</td><td colspan="3">Err38 (Over-travel inhibit input protection) is triggered when either one of the connection of CW or CCW inhibit input to COM– become open.</td></tr>
</table>
<Cautions>
1. When Pr04 is set to 0 and over-travel inhibit input is entered, the motor decelerates and stops according to the preset sequence with Pr66 (Sequence at over-travel inhibition). For details, refer to the explanation of Pr66.
2. When both of CCWL and CWL inputs are opened while Pr04 is set to 0, the driver trips with Err38 (Overtravel inhibit input error) judging that this is an error.
3. When you turn off the limit switch on upper side of the work at vertical axis application, the work may repeat up/down movement because of the loosing of upward torque. In this case, set up Pr66 to 2, or limit with the host controller instead of using this function.</td></tr>
<tr><td>07</td><td>Selection of speed monitor (SP)</td><td>0 to 9
<3></td><td>You can set up the content of analog speed monitor signal output (SP : CN X5, Pin43) and the relation between the output voltage level and the speed.
<table>
<tr><th>Setup value</th><th>Signal of SP</th><th>Relation between the output voltage level and the speed</th></tr>
<tr><td>0</td><td rowspan="5">Motor actual speed</td><td>6V / 47 r/min</td></tr>
<tr><td>1</td><td>6V / 188 r/min</td></tr>
<tr><td>2</td><td>6V / 750 r/min</td></tr>
<tr><td><3></td><td>6V / 3000 r/min</td></tr>
<tr><td>4</td><td>1.5V / 3000 r/min</td></tr>
<tr><td>5</td><td rowspan="5">Command speed</td><td>6V / 47 r/min</td></tr>
<tr><td>6</td><td>6V / 188 r/min</td></tr>
<tr><td>7</td><td>6V / 750 r/min</td></tr>
<tr><td>8</td><td>6V / 3000 r/min</td></tr>
<tr><td>9</td><td>1.5V / 3000 r/min</td></tr>
</table></td></tr>
</table>

Parameter Setup

Standard default : < >

<table>
<tr><th>PrNo.</th><th>Title</th><th>Setup range</th><th>Function/Content</th></tr>
<tr><td>08</td><td>Selection of torque monitor (IM)</td><td>0 to 12
<0></td><td>You can set up the content of the analog torque monitor of the signal output (IM : CN X5, Pin-42), and the relation between the output voltage level and torque or deviation pulse counts.
<table>
<tr><th>Setup value</th><th>Signal of IM</th><th>Relation between the output voltage level and torque or deviation pulse counts</th></tr>
<tr><td><0></td><td>Torque command</td><td>3V/rated (100%) torque</td></tr>
<tr><td>1</td><td rowspan="5">Position deviation</td><td>3V / 31Pulse</td></tr>
<tr><td>2</td><td>3V / 125Pulse</td></tr>
<tr><td>3</td><td>3V / 500Pulse</td></tr>
<tr><td>4</td><td>3V / 2000Pulse</td></tr>
<tr><td>5</td><td>3V / 8000Pulse</td></tr>
<tr><td>6</td><td rowspan="5">Full-closed deviation</td><td>3V / 31Pulse</td></tr>
<tr><td>7</td><td>3V / 125Pulse</td></tr>
<tr><td>8</td><td>3V / 500Pulse</td></tr>
<tr><td>9</td><td>3V / 2000Pulse</td></tr>
<tr><td>10</td><td>3V / 8000Pulse</td></tr>
<tr><td>11</td><td rowspan="2">Torque command</td><td>3V / 200% torque</td></tr>
<tr><td>12</td><td>3V / 400% torque</td></tr>
</table></td></tr>
<tr><td>09</td><td>Selection of TLC output</td><td>0 to 8
<0></td><td>You can assign the function of the torque in-limit output (TLC : CN X5 Pin-40).
<table>
<tr><th>Setup value</th><th>Function</th><th>Note</th></tr>
<tr><td><0></td><td>Torque in-limit output</td><td rowspan="9">For details of function of each output of the left, refer to the table of P.92, "Selection of TCL and ZSP outputs".</td></tr>
<tr><td>1</td><td>Zero speed detection output</td></tr>
<tr><td>2</td><td>Alarm output of either one of Over-regeneration /Over-load/Absolute battery/Fan lock/External scale</td></tr>
<tr><td>3</td><td>Over-regeneration alarm trigger output</td></tr>
<tr><td>4</td><td>Overload alarm output</td></tr>
<tr><td>5</td><td>Absolute battery alarm output</td></tr>
<tr><td>6</td><td>Fan lock alarm output</td></tr>
<tr><td>7</td><td>External scale alarm output</td></tr>
<tr><td>8</td><td>In-speed (Speed coincidence) output</td></tr>
</table></td></tr>
<tr><td>0A</td><td>Selection of ZSP output</td><td>0 to 8
<1></td><td>You can assign the function of the zero speed detection output (ZSP: CN X5 Pin-12).
<table>
<tr><th>Setup value</th><th>Function</th><th>Note</th></tr>
<tr><td>0</td><td>Torque in-limit output</td><td rowspan="9">For details of function of each output of the left, refer to the table of P.92, "Selection of TCL and ZSP outputs".</td></tr>
<tr><td><1></td><td>Zero speed detection output</td></tr>
<tr><td>2</td><td>Alarm output of either one of Over-regeneration /Over-load/Absolute battery/Fan lock/External scale</td></tr>
<tr><td>3</td><td>Over-regeneration alarm trigger output</td></tr>
<tr><td>4</td><td>Overload alarm output</td></tr>
<tr><td>5</td><td>Absolute battery alarm output</td></tr>
<tr><td>6</td><td>Fan lock alarm output</td></tr>
<tr><td>7</td><td>External scale alarm output</td></tr>
<tr><td>8</td><td>In-speed (Speed coincidence) output</td></tr>
</table></td></tr>
<tr><td>0B
*</td><td>Setup of absolute encoder</td><td>0 to 2
<1></td><td>You can set up the using method of 17-bit absolute encoder.
<table>
<tr><th>Setup value</th><th>Content</th></tr>
<tr><td>0</td><td>Use as an absolute encoder.</td></tr>
<tr><td><1></td><td>Use as an incremental encoder.</td></tr>
<tr><td>2</td><td>Use as an absolute encoder, but ignore the multi-turn counter over.</td></tr>
</table>
<Caution>
This parameter will be invalidated when 5-wire, 2500P/r incremental encoder is used.</td></tr>
<tr><td>0C
*</td><td>Baud rate setup of RS232 communication</td><td>0 to 5
<2></td><td>You can set up the communication speed of RS232.
• Error of baud rate is ±0.5%.
<table>
<tr><th>Setup value</th><th>Baud rate</th></tr>
<tr><td>0</td><td>2400bps</td></tr>
<tr><td>1</td><td>4800bps</td></tr>
<tr><td><2></td><td>9600bps</td></tr>
</table>
<table>
<tr><th>Setup value</th><th>Baud rate</th></tr>
<tr><td>3</td><td>19200bps</td></tr>
<tr><td>4</td><td>38400bps</td></tr>
<tr><td>5</td><td>57600bps</td></tr>
</table></td></tr>
</table>

Standard default : < >

<table>
<tr><th>PrNo.</th><th>Title</th><th>Setup range</th><th>Function/Content</th></tr>
<tr><td>0D
*</td><td>Baud rate setup of RS485 communication</td><td>0 to 5
<2></td><td>You can set up the communication speed of RS485.
• Error of baud rate is ±0.5%.
<table>
<tr><th>Setup value</th><th>Baud rate</th></tr>
<tr><td>0</td><td>2400bps</td></tr>
<tr><td>1</td><td>4800bps</td></tr>
<tr><td><2></td><td>9600bps</td></tr>
</table>
<table>
<tr><th>Setup value</th><th>Baud rate</th></tr>
<tr><td>3</td><td>19200bps</td></tr>
<tr><td>4</td><td>38400bps</td></tr>
<tr><td>5</td><td>57600bps</td></tr>
</table></td></tr>
<tr><td>0E
*</td><td>Setup of front panel lock</td><td>0 to 1
<0></td><td>You can limit the operation of the front panel to the monitor mode only.
You can prevent such a misoperation as unexpected parameter change.
<table>
<tr><th>Setup value</th><th>Content</th></tr>
<tr><td><0></td><td>Valid to all</td></tr>
<tr><td>1</td><td>Monitor mode only</td></tr>
</table>
<Note>
You can still change parameters via communication even though this setup is 1.
To return this parameter to 0, use the console or the "PANATERM®".</td></tr>
</table>

Parameters for Adjustment of Time Constants of Gains and Filters

Standard default : < >

PrNo.	Title	Setup range	Unit	Function/Content
10	1st gain of position loop	0 to 3000 A to C-frame:<63>* D to F-frame:<32>*	1/s	You can determine the response of the positional control system. Higher the gain of position loop you set, faster the positioning time you can obtain. Note that too high setup may cause oscillation.
11	1st gain of velocity loop	1 to 3500 A to C-frame:<35>* D to F-frame:<18>*	Hz	You can determine the response of the velocity loop. In order to increase the response of overall servo system by setting high position loop gain, you need higher setup of this velocity loop gain as well. However, too high setup may cause oscillation. **<Caution>** When the inertia ratio of Pr20 is set correctly, the setup unit of Pr11 becomes (Hz).
12	1st time constant of velocity loop integration	1 to 1000 A to C-frame:<16>* D to F-frame:<31>*	ms	You can set up the integration time constant of velocity loop. Smaller the setup, faster you can dog-in deviation at stall to 0. The integration will be maintained by setting to "999". The integration effect will be lost by setting to "1000".
13	1st filter of speed detection	0 to 5 <0>*	–	You can set up the time constant of the low pass filter (LPF) after the speed detection, in 6 steps. Higher the setup, larger the time constant you can obtain so that you can decrease the motor noise, however, response becomes slow. Use with a default value of 0 in normal operation.
14	1st time constant of torque filter	0 – 2500 A to C-frame:<65>* D to F-frame:<126>*	0.01ms	You can set up the time constant of the 1st delay filter inserted in the torque command portion. You might expect suppression of oscillation caused by distortion resonance.
15	Velocity feed forward	–2000 to 2000 <300>*	0.1%	You can set up the velocity feed forward volume at position control. Higher the setup, smaller positional deviation and better response you can obtain, however this might cause an overshoot.
16	Time constant of feed forward filter	0 to 6400 <50>*	0.01ms	You can set up the time constant of 1st delay filter inserted in velocity feed forward portion. You might expect to improve the overshoot or noise caused by larger setup of above velocity feed forward.

<Notes>

- For parameters which No. have a suffix of "*", changed contents will be validated when you turn on the control power.
- Parameters which default values have a suffix of "*" will be automatically set up during real time auto-gain tuning. When you change manually, invalidate the real-time auto-gain tuning first then set, referring to P.239, "Release of Automatic Gain Adjusting Function" of Adjustment.

Standard default : < >

PrNo.	Title	Setup range	Unit	Function/Content
18	2nd gain of position loop	0 to 3000 A to C-frame:<73>* D to F-frame:<38>*	1/s	Position loop, velocity loop, speed detection filter and torque command filter have their 2 pairs of gain or time constant (1st and 2nd). For details of switching the 1st and the 2nd gain or the time constant, refer to P.226, "Adjustment". The function and the content of each parameter is as same as that of the 1st gain and time constant.
19	2nd gain of velocity loop	1 to 3500 A to C-frame:<35>* D to F-frame:<18>*	Hz	
1A	2nd time constant of velocity loop integration	1 to 1000 <1000>*	ms	
1B	2nd filter of velocity detection	0 to 5 <0>*	–	
1C	2nd time constant of torque filter	0 to 2500 A to C-frame:<65>* D to F-frame:<126>*	0.01ms	
1D	1st notch frequency	100 to 1500 <1500>	Hz	You can set up the frequency of the 1st resonance suppressing notch filter. The notch filter function will be invalidated by setting up this parameter to "1500".
1E	1st notch width selection	0 to 4 <2>	–	You can set up the notch filter width of the 1st resonance suppressing filter in 5 steps. Higher the setup, larger the notch width you can obtain. Use with default setup in normal operation.

Parameters for Auto-Gain Tuning

Standard default : < >

PrNo.	Title	Setup range	Unit	Function/Content
20	Inertia ratio	0 to 10000 <250>*	%	You can set up the ratio of the load inertia against the rotor (of the motor) inertia. Pr20= (load inertia/rotor inertia) X 100 [%] When you execute the normal auto-gain tuning, the load inertial will be automatically estimated after the preset action, and this result will be reflected in this parameter. The inertia ratio will be estimated at all time while the real-time auto-gain tuning is valid, and its result will be saved to EEPROM every 30 min. **<Caution>** If the inertia ratio is correctly set, the setup unit of Pr11 and Pr19 becomes (Hz). When the inertia ratio of Pr20 is larger than the actual, the setup unit of the velocity loop gain becomes larger, and when the inertia ratio of Pr20 is smaller than the actual, the setup unit of the velocity loop gain becomes smaller.
21	Setup of real-time auto-gain tuning	0 to 7 <1>	–	You can set up the action mode of the real-time auto-gain tuning. With higher setup such as 3 or 6, the driver respond quickly to the change of the inertia during operation, however it might cause an unstable operation. Use 1 or 4 for normal operation.For the vertical axis application, use with the setup of 4 to 6. When vibration occurs at gain switching, set up this to "7".

Setup value	Real-time auto-gain tuning	Varying degree of load inertia in motion
0	Invalid	–
<1>	Normal mode	Little change
2		Gradual change
3		Rapid change
4	Vertical axis mode	Little change
5		Gradual change
6		Rapid change
7	No gain switching	Little change

Standard default : < >

<table>
<tr><th>PrNo.</th><th>Title</th><th>Setup range</th><th>Unit</th><th>Function/Content</th></tr>
<tr><td>22</td><td>Selection of machine stiffness at real-time auto-gain tuning</td><td>0 to 15
A to C-frame:
<4>
D to F-frame:
<1></td><td>–</td><td>You can set up the machine stiffness in 16 steps while the real-time auto-gain tuning is valid.
low←machine stiffness→high
low← servo gain →high
Pr22 | 0, 1- - - - - - - - - - - - 14, 15
low← response →high
<Caution>
When you change the setup value rapidly, the gain changes rapidly as well, and this may give impact to the machine. Increase the setup gradually watching the movement of the machine.</td></tr>
<tr><td>23</td><td>Setup of adaptive filter mode</td><td>0 to 2
<1></td><td>–</td><td>You can set up the action of the adaptive filter.
0 : Invalid
1 : Valid
2 : Hold (holds the adaptive filter frequency when this setup is changed to 2.)
<Caution>
When you set up the adaptive filter to invalid, the adaptive filter frequency of Pr2F will be reset to 0. The adaptive filter is always invalid at the torque control mode.</td></tr>
<tr><td>24</td><td>Selection of damping filter switching</td><td>0 to 2
<0></td><td>–</td><td>You can select the switching method when you use the damping filter.
0 : No switching (both of 1st and 2nd are valid.)
1 : You can select either 1st or 2nd with damping control switching input (VS-SEL).
when VS-SEL is opened, 1st damping filter selection (Pr2B, 2C)
when VS-SEL is close, 2nd damping filter selection (Pr2D, 2E)
2 : You can switch with the position command direction.
CCW : 1st damping filter selection (Pr2B, 2C).
CW : 2nd damping filter selection (Pr2D, 2E).</td></tr>
<tr><td>25</td><td>Setup of an action at normal mode auto-gain tuning</td><td>0 to 7
<0></td><td>–</td><td>You can set up the action pattern at the normal mode auto-gain tuning.
<table>
<tr><th>Setup value</th><th>Number of revolution</th><th>Rotational direction</th></tr>
<tr><td><0></td><td rowspan="4">2 [revolution]</td><td>CCW → CW</td></tr>
<tr><td>1</td><td>CW → CCW</td></tr>
<tr><td>2</td><td>CCW → CCW</td></tr>
<tr><td>3</td><td>CW → CW</td></tr>
<tr><td>4</td><td rowspan="4">1 [revolution]</td><td>CCW → CW</td></tr>
<tr><td>5</td><td>CW → CCW</td></tr>
<tr><td>6</td><td>CCW → CCW</td></tr>
<tr><td>7</td><td>CW → CW</td></tr>
</table>
e.g.) When the setup is 0, the motor turns 2 revolutions to CCW and 2 revolutions to CW.</td></tr>
<tr><td>26</td><td>Setup of software limit</td><td>0 to 1000
<10></td><td>0.1 revolution</td><td>You can set up the movable range of the motor against the position command input range. When the motor movement exceeds the setup value, software limit protection of Pr34 will be triggered. This parameter is invalid with setup value of 0.</td></tr>
<tr><td>27</td><td>Setup of instantaneous speed observer</td><td>0 to 1
<0>*</td><td>–</td><td>With a high stiffness machine, you can achieve both high response and reduction of vibration at stall, by using this instantaneous speed observer.
<table>
<tr><th>Setup value</th><th>Instantaneous speed observer setup</th></tr>
<tr><td><0>*</td><td>Invalid</td></tr>
<tr><td>1</td><td>Valid</td></tr>
</table>
You need to set up the inertia ratio of Pr20 correctly to use this function.
If you set up Pr21, real-time auto-gain tuning mode setup, to other than 0 (valid), Pr27 becomes 0 (invalid)</td></tr>
</table>

<Notes>

- Parameters which default values have a suffix of "*" will be automatically set up during real time auto-gain tuning. When you change manually, invalidate the real-time auto-gain tuning first then set, referring to P.239, "Release of Automatic Gain Adjusting Function" of Adjustment.

Parameter Setup

Standard default : < >

PrNo.	Title	Setup range	Unit	Function/Content
28	2nd notch frequency	100 to 1500 <1500>	Hz	You can set up the 2nd notch width of the resonance suppressing filter in 5 steps. The notch filter function is invalidated by setting up this parameter to "1500".
29	Selection of 2nd notch width	0 to 4 <2>	–	You can set up the notch width of 2nd resonance suppressing filter in 5 steps. Higher the setup, larger the notch width you can obtain. Use with default setup in normal operation.
2A	Selection of 2nd notch depth	0 to 99 <0>	–	You can set up the 2nd notch depth of the resonance suppressing filter. Higher the setup, shallower the notch depth and smaller the phase delay you can obtain.
2B	1st damping frequency	0 to 2000 <0>	0.1Hz	You can set up the 1st damping frequency of the damping control which suppress vibration at the load edge. The driver measures vibration at load edge. Setup unit is 0.1[Hz] . The setup frequency is 10.0 to 200.0[Hz] . Setup of 0 to 99 becomes invalid. Refer to P.250, "Damping control" as well before using this parameter.
2C	Setup of 1st damping filter	–200 to 2000 <0>	0.1Hz	While you set up Pr2B (1st damping frequency), set this up to smaller value when torque saturation occurs, and to larger value when you need faster action.Use with the setup of 0 in normal operation. Refer to P.250, "Damping control" of Adjustment. **<Caution>** Setup is also limited by 10.0[Hz] –Pr2B≦Pr2C≦Pr2B
2D	2nd damping frequency	0 to 2000 <0>	0.1Hz	You can set up the 2nd damping frequency of the damping control which suppress vibration at the load edge. The driver measures vibration at the load edge. Setup unit is 0.1 [Hz] . Setup frequency is 10.0 to 200.0 [Hz] . Setup of 0-99 becomes invalid. Refer to P.250, "Damping control" of Adjustment as well before using this parameter.
2E	Setup of 2nd damping filter	–200 to 2000 <0>	0.1Hz	While you set up Pr2D (2nd damping frequency), set this up to smaller value when torque saturation occurs, and to larger value when you need faster action. Use with the setup of 0 in normal operation. Refer to P.250, "Damping control" of Adjustment. **<Caution>** Setup is also limited by 10.0[Hz] –Pr2D≦Pr2E≦Pr2D
2F	Adaptive filter frequency	0 to 64 <0>	–	Displays the table No. corresponding to the adaptive filter frequency. (Refer to P.234 of Adjustment.) This parameter will be automatically set and cannot be changed while the adaptive filter is valid. (when Pr23 (Setup of adaptive filter mode) is other than 0.) 0 to 4 Filter is invalid. 5 to 48 Filter is valid. 49 to 64 Filter validity changes according to Pr22. This parameter will be saved to EEPROM every 30 minutes while the adaptive filter is valid, and when the adaptive filter is valid at the next power-on, the adaptive action starts taking the saved data in EEPROM as an initial value. **<Caution>** When you need to clear this parameter to reset the adaptive action while the action is not normal, invalidate the adaptive filter (Pr23, "Setup of adaptive filter mode" to 0) once, then validate again. Refer to P.239, "Release of Automatic Gain Adjusting Function" of Adjustment as well.

<Notes>

- For parameters which No. have a suffix of "*", changed contents will be validated when you turn on the control power.
- Parameters which default values have a suffix of "*" will be automatically set up during real time auto-gain tuning. When you change manually, invalidate the real-time auto-gain tuning first then set, referring to P.239, "Release of Automatic Gain Adjusting Function" of Adjustment.

Parameters for Adjustment (2nd Gain Switching Function)

Standard default : < >

<table>
<tr><th>PrNo.</th><th>Title</th><th>Setup range</th><th>Unit</th><th>Function/Content</th></tr>
<tr><td>30</td><td>Setup of 2nd gain</td><td>0 to 1
<1>*</td><td>–</td><td>You can select the PI/P action switching of the velocity control or 1st/2nd gain switching.
<table>
<tr><th>Setup value</th><th>Gain selection/switching</th></tr>
<tr><td>0</td><td>1st gain (PI/P switching enabled) *1</td></tr>
<tr><td><1>*</td><td>1st/2nd gain switching enabled *2</td></tr>
</table>
*1 Switch the PI/P action with the gain switching input (GAIN CN X5, Pin-27). PI is fixed when Pr03 (Torque limit selection) is 3.
<table>
<tr><th>GAIN input</th><th>Action of velocity loop</th></tr>
<tr><td>Open with COM–</td><td>PI action</td></tr>
<tr><td>Connect to COM–</td><td>P action</td></tr>
</table>
*2 For switching condition of the 1st and the 2nd, refer to P.243, "Gain Switching Function" of Adjustment.</td></tr>
<tr><td>31</td><td>1st mode of control switching</td><td>0 to 10
<0>*</td><td>–</td><td>You can select the switching condition of 1st gain and 2nd gain while Pr30 is set to 1.
<table>
<tr><th>Setup value</th><th>Gain switching condition</th></tr>
<tr><td><0>*</td><td>Fixed to the 1st gain.</td></tr>
<tr><td>1</td><td>Fixed to the 2nd gain.</td></tr>
<tr><td>2 *1</td><td>2nd gain selection when the gain switching input is turned on. (Pr30 setup must be 1.)</td></tr>
<tr><td>3 *2</td><td>2nd gain selection when the toque command variation is larger than the setups of Pr33 (1st level of control switching) and Pr34 (1st hysteresis of control switching).</td></tr>
<tr><td>4 *2</td><td>Fixed to the 1st gain.</td></tr>
<tr><td>5 *2</td><td>2nd gain selection when the command speed is larger than the setups of Pr33 (1st level of control switching) and Pr34 (1st hysteresis at control switching).</td></tr>
<tr><td>6 *2</td><td>2nd gain selection when the positional deviation is larger than the setups of Pr33 (1st control switching level) and Pr34 (1st hysteresis of control switching).</td></tr>
<tr><td>7 *2</td><td>2nd gain selection when more than one command pulse exist between 166μs.</td></tr>
<tr><td>8 *2</td><td>2nd gain selection when the positional deviation counter value exceeds the setup of Pr60 (Positioning completer range).</td></tr>
<tr><td>9 *2</td><td>2nd gain selection when the motor actual speed exceeds the setup of Pr33 (1st level of control switching) and Pr34 (1at hysteresis of control switching) .</td></tr>
<tr><td>10 *2</td><td>Switches to the 2nd gain while the position command exists.
Switches to the 1st gain when no-position command status lasts for the setup of Pr32 [x 166μs] and the speed falls slower than the setups of Pr33–34[r/min] .</td></tr>
</table>
*1 Fixed to the 1st gain regardless of GAIN input, when Pr31 is set to 2 and Pr03 (Torque limit selection) is set to 3.
*2 For the switching level and the timing, refer to P.243, "Gain Switching Function" of Adjustment.</td></tr>
<tr><td>32</td><td>1st delay time of control switching</td><td>0 to 10000
<30>*</td><td>x 166μs</td><td>You can set up the delay time when returning from the 2nd to the 1st gain, while Pr31 is set to 3 or 5 to 10.</td></tr>
<tr><td>33</td><td>1st level of control switching</td><td>0 to 20000
<50>*</td><td>–</td><td>You can set up the switching (judging) level of the 1st and the 2nd gains, while Pr31 is set to 3, 5, 6. 9 and 10.
Unit varies depending on the setup of Pr31 (1st mode of control switching)</td></tr>
<tr><td>34</td><td>1st hysteresis of control switching</td><td>0 to 20000
<33>*</td><td>–</td><td>You can set up hysteresis width to be implemented above/below the judging level which is set up with Pr33. Unit varies depending on the setup of Pr31 (1st control switching mode). Definitions of Pr32 (Delay), Pr33 (Level) and Pr34 (Hysteresis) are explained in the fig. below.
 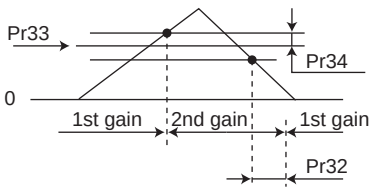

<Caution>
The setup of Pr33 (Level) and Pr34 (Hysteresis) are valid as absolute values (positive/negative).</td></tr>
</table>

Parameter Setup

Standard default : < >

PrNo.	Title	Setup range	Unit	Function/Content
35	Switching time of position gain	0 – 10000 <20>*	(setup value + 1) x 166μs	You can setup the step-by-step switching time to the position loop gain only at gain switching while the 1st and the 2nd gain switching is valid. **<Caution>** The switching time is only valid when switching from small position gain to large position gain. 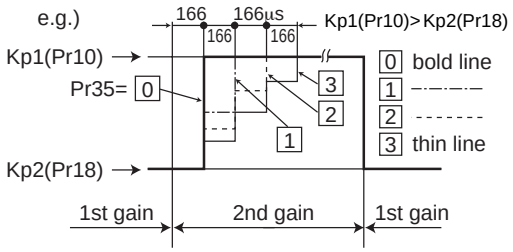
3D	JOG speed setup	0 – 500 <300>	r/min	You can setup the JOG speed. Refer to P.75, "Trial Run"of Preparation.

Parameters for Position Control

Standard default : < >

PrNo.	Title	Setup range	Function/Content
40 *	Selection of command pulse input	0 to 1 <0>	You can select either the photo-coupler input or the exclusive input for line driver as the command pulse input.

Setup value	Content
<0>	Photo-coupler input (X5 PULS1:Pin-3, PULS2:Pin-4, SIGN1:Pin-5, SIGN2:Pin-6)
1	Exclusive input for line driver (X5 PULSH1:Pin-44, PULSH2:Pin-45, SIGNH1:Pin-46, SIGNH2:Pin-47)

PrNo.	Title	Setup range	Function/Content
41 *	Command pulse rotational direction setup	0 to 1 <0>	You can set up the rotational direction against the command pulse input, and the command pulse input format.
42 *	Setup of command pulse input mode	0 to 3 <1>	

Pr41 setup value (Command pulse rotational direction setup)	Pr42 setup value (Command pulse input mode setup)	Command pulse format	Signal title	CCW command	CW command
<0>	0 or 2	90° phase difference 2-phase pulse (A + B-phase)	PULS SIGN	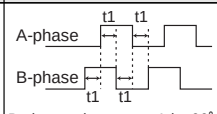 B-phase advances to A by 90°.	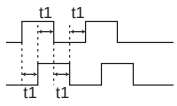 B-phase delays from A by 90°.
	<1>	CW pulse train + CCW pulse train	PULS SIGN	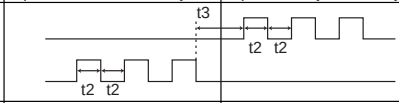	
	3	pulse train + Signal	PULS SIGN	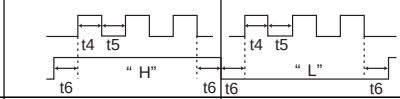	
1	0 or 2	90° phase difference 2-phase pulse (A + B-phase)	PULS SIGN	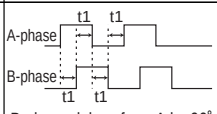 B-phase delays from A by 90°.	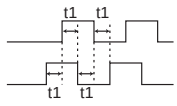 B-phase advances to A by 90°.
	1	CW pulse train + CCW pulse train	PULS SIGN	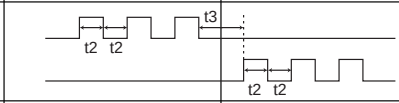	
	3	pulse train + Signal	PULS SIGN	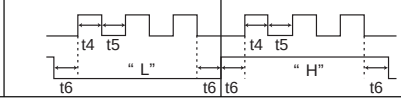	

• Permissible max. input frequency, and min. necessary time width of command pulse input signal.

Input I/F of PULS/SIGN signal		Permissible max. input frequency	Min. necessary time width t1	t2	t3	t4	t5	t6
Pulse train interface exclusive to line driver		2Mpps	500ns	250ns	250ns	250ns	250ns	250ns
Pulse train interface	Line driver interface	500kpps	2μs	1μs	1μs	1μs	1μs	1μs
	Open collector interface	200kpps	5μs	2.5μs	2.5μs	2.5μs	2.5μs	2.5μs

Make the rising/falling time of the command pulse input signal to 0.1μs or smaller.

Standard default : < >

<table>
<tr><th>PrNo.</th><th>Title</th><th>Setup range</th><th>Function/Content</th></tr>
<tr><td>43</td><td>Invalidation of command pulse inhibit input</td><td>0 to 1
<1></td><td>You can select either the validation or the invalidation of the command pulse inhibit input (INH : CN X5 Pin-33).
<table><tr><th>Setup value</th><th>INH input</th></tr><tr><td>0</td><td>Valid</td></tr><tr><td><1></td><td>Invalid</td></tr></table>
Command pulse input will be inhibited by opening the connection of INH input to COM–. When you do not use INH input, set up Pr43 to 1 so that you may not need to connect INH (CN I/F Pin-33) and COM– (Pin-41) outside of the driver.</td></tr>
<tr><td>44
*</td><td>Numerator of pulse output division</td><td>1 to 32767
<2500></td><td rowspan="2">You can set up the pulse counts to be fed out from the pulse output (X5 0A+ : Pin-21, 0A- : Pin-22, 0B+ : Pin-48, 0B- : Pin-49).
• Pr45=<0> (Default)
You can set up the output pulse counts per one motor revolution for each OA and OB with the Pr44 setup. Therefore the pulse output resolution after quadruple can be obtained from the formula below.
The pulse output resolution per one revolution
= Pr44 (Numerator of pulse output division) X4
• Pr45≠0 :
The pulse output resolution per one revolution can be divided by any ration according to the formula below.
Pulse output resolution per one revolution $\frac{\text{Pr44 (Numerator of pulse output division)}}{\text{Pr45 (Denominator of pulse output division)}}$ x Encoder resolution
<Cautions>
• The encoder resolution is 131072 [P/r] for the 17-bit absolute encoder, and 10000 [P/r] for the 5-wire 2500P/r incremental encoder.
• The pulse output resolution per one revolution cannot be greater than the encoder resolution.
(In the above setup, the pulse output resolution equals to the encoder resolution.)
• Z-phase is fed out once per one revolution of the motor.
When the pulse output resolution obtained from the above formula is multiple of 4, Z-phase synchronizes with A-phase. In other case, the Z-phase width equals to output with the encoder resolution, and becomes narrower than A-phase, hence does not synchronize with A-phase.
when encoder resolution x $\frac{\text{Pr44}}{\text{Pr45}}$ is multiple of 4
 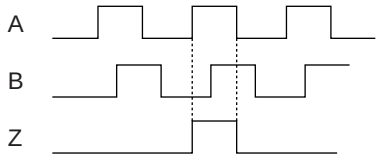

Synchronized
when encoder resolution x $\frac{\text{Pr44}}{\text{Pr45}}$ is not multiple of 4
 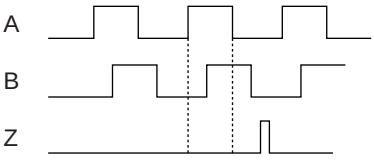

Not-synchronized</td></tr>
<tr><td>45
*</td><td>Denominator of pulse output division</td><td>0 to 32767
<0></td></tr>
</table>

<Notes>

• For parameters which No. have a suffix of "*", changed contents will be validated when you turn on the control power.

Parameter Setup

Standard default : < >

<table>
<tr><th>PrNo.</th><th>Title</th><th>Setup range</th><th>Function/Content</th></tr>
<tr><td>46
*</td><td>Reversal of pulse output logic</td><td>0 to 3
<0></td><td>You can set up the B-phase logic and the output source of the pulse output (X5 OB+ : Pin-48, OB– : Pin-49). With this parameter, you can reverse the phase relation between the A-phase pulse and the B-phase pulse by reversing the B-phase logic.
<table>
<tr><th>Setup value</th><th>A-phase (OA)</th><th>at motor CCW rotation</th><th>at motor CW rotation</th></tr>
<tr><td><0>, 2</td><td>B-phase(OB) non-reversal</td><td> 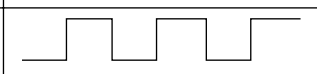 </td><td> 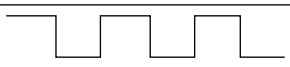 </td></tr>
<tr><td>1, 3</td><td>B-phase(OB) reversal</td><td> 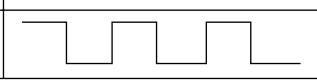 </td><td> 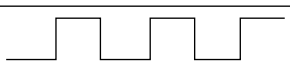 </td></tr>
</table>
<table>
<tr><th>Pr46</th><th>B-phase logic</th><th>Output source</th></tr>
<tr><td><0></td><td>Non-reversal</td><td>Encoder position</td></tr>
<tr><td>1</td><td>Reversal</td><td>Encoder position</td></tr>
<tr><td>2 *1</td><td>Non-reversal</td><td>External scale position</td></tr>
<tr><td>3 *1</td><td>Reversal</td><td>External scale position</td></tr>
</table>
*1 The output source of Pr46= 2, 3 is valid only at full-closed control.</td></tr>
<tr><td>48</td><td colspan="3">Electronic gear function-related (Pr48 to 4B)</td></tr>
<tr><td></td><td>1st numerator of electronic gear</td><td>0 to 10000
<0></td><td rowspan="4">Electronic gear (Command pulse division/multiplication) function
• Purpose of this function
(1) You can set up any motor revolution and travel per input command unit.
(2) You can increase the nominal command pulse frequency when you cannot obtain the required speed due to the limit of pulse generator of the host controller.
• Block diagram of electronic gear
 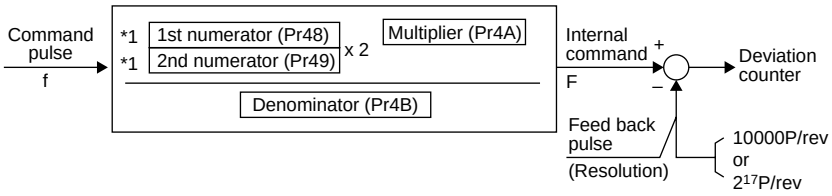

• "Numerator" selection of electronic gear
*1 : Select the 1st or the 2nd with the command electronic gear input switching (DIV : CN X5, Pin-28)
<table>
<tr><td>DIV input open</td><td>Selection of 1st numerator (Pr48)</td></tr>
<tr><td>DIV input connect to COM–</td><td>Selection of 2nd numerator (Pr49)</td></tr>
</table>
The electronic gear ratio is set with the formula below.
• when the numerator is <0> (Default) : Numerator (Pr48,49)X2^Pr4A) is automatically set equal to encoder resolution, and you can set command pulse per revolution with Pr4B.
$\text{Electronic gear ratio} = \frac{\text{Encoder resolution}}{\text{Command pulse counts per one revolution (Pr48)}}$
• when numerator ≠ 0 :
$\text{Electronic gear ratio} = \frac{\text{Numerator of command electronic gear (Pr48,49)} \times 2^{\text{Multiplier of command div/multiple numerator (Pr4A)}}}{\text{Denominator of command electronic gear (Pr4B)}}$
<Caution>
In actual calculation of numerator (Pr48, Pr49) X2^Pr4A, 4194304 (Pr4D setup value +1) becomes the max. value.
(to be continued to next page)</td></tr>
<tr><td></td><td>2nd numerator of electronic gear</td><td>0 to 10000
<0></td></tr>
<tr><td>4A</td><td>Multiplier of electronic gear numerator</td><td>0 to 17
<0></td></tr>
<tr><td>4B</td><td>Denominator of electronic gear</td><td>0 to 10000
<10000></td></tr>
</table>

Standard default : < >

<table>
<tr><th>PrNo.</th><th>Title</th><th>Setup range</th><th>Function/Content</th></tr>
<tr><td colspan="4">Electronic gear function-related (Pr48-4B) (continued from the previous page)</td></tr>
<tr><td>48
49
4A
4B</td><td>1st numerator of electronic gear
2nd numerator of electronic gear
Multiplier of electronic gear numerator
Denominator of electronic gear</td><td></td><td>< Setup example when numerator ≠0>
• When division/multiplication ratio= 1, it is essential to keep the relationship in which the motor turns one revolution with the command input (f) of the encoder resolution.
Therefore, when the encoder resolution is 10000P/r, it is required to enter the input of f= 5000Pulses in case of duplicate, f= 40000Pulse in case of division of 1/4, in order to turn the motor by one revolution.
• Set up Pr48, 4A and 4B so that the internal command (F) after division / multiplication may equal to the encoder resolution (10000 or 2^{17}).
$F = \frac{f \times Pr48 \times 2^{Pr4A}}{Pr4B} = 10000 \text{ or } 2^{17}$
F : Internal command pulse counts per motor one revolution
f : Command pulse counts per one motor revolution.
<table><tr><th>Encoder resolution</th><th>2^{17} (131072)</th><th>10000 (2500P/r x 4)</th></tr><tr><td>Example 1
when making the command input (f) as 5000 per one motor revolution</td><td>$\frac{Pr48\ \boxed{1} \times 2^{\boxed{17}}}{Pr4B\ \boxed{5000}}$ (Pr4A)</td><td>$\frac{Pr48\ \boxed{10000} \times 2^{\boxed{0}}}{Pr4B\ \boxed{5000}}$ (Pr4A)</td></tr><tr><td>Example 2
when making the command input (f) as 40000 per one motor revolution</td><td>$\frac{Pr48\ \boxed{1} \times 2^{\boxed{15}}}{Pr4B\ \boxed{10000}}$ (Pr4A)</td><td>$\frac{Pr48\ \boxed{2500} \times 2^{\boxed{0}}}{Pr4B\ \boxed{10000}}$ (Pr4A)</td></tr></table></td></tr>
<tr><td>4C</td><td>Setup of primary delay smoothing</td><td>0 to 7
<1></td><td>Smoothing filter is the filter for primary delay which is inserted after the electronic gear.
Purpose of smoothing filter
• Reduce the step motion of the motor while the command pulse is rough.
• Actual examples which cause rough command pulse are;
(1) when you set up a high multiplier ratio (10 times or more).
(2) when the command pulse frequency is low.
You can set the time constant of the smoothing filter in 8 steps with Pr4C.
<table><tr><th>Setup value</th><th>Time constant</th></tr><tr><td>0</td><td>No filter function</td></tr><tr><td><1></td><td>Time constant small</td></tr><tr><td>|</td><td>↓</td></tr><tr><td>7</td><td>Time constant large</td></tr></table></td></tr>
<tr><td>4D
*</td><td>Setup of FIR smoothing</td><td>0 to 31
<0></td><td>You can set up the moving average times of the FIR filter covering the command pulse. (Setup value + 1) become average travel times.</td></tr>
<tr><td>4E</td><td>Counter clear input mode</td><td>0 to 2
<1></td><td>You can set up the clearing conditions of the counter clear input signal which clears the deviation counter.
<table><tr><th>Setup value</th><th>Clearing condition</th></tr><tr><td>0</td><td>Clears the deviation counter at level (shorting for longer than 100μs)*1</td></tr><tr><td><1></td><td>Clears the deviation counter at falling edge (open-shorting for longer than 100μs)*1</td></tr><tr><td>2</td><td>Invalid</td></tr></table>*1 : Min. time width of CL signal
 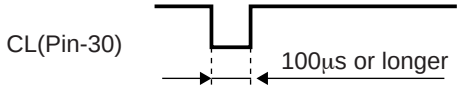
</td></tr>
</table>

<Notes>

• For parameters which No. have a suffix of "*", changed contents will be validated when you turn on the control power.

Parameter Setup

Parameters for Velocity and Torque Control

Standard default : < >

PrNo.	Title	Setup range	Unit	Function/Content
5E	1st torque limit setup	0 to 500 <500> *2	%	You can set up the limit value of the motor output torque (Pr5E : 1st torque, Pr5F : 2nd torque). For the torque limit selection, refer to Pr03 (Torque limit selection). This torque limit function limits the max. motor torque inside of the driver with parameter setup. In normal operation, this driver permits approx. 3 times larger torque than the rated torque instantaneously. If this 3 times bigger torque causes any trouble to the load (machine) strength, you can use this function to limit the max. torque. • Setup value is to be given in % against the rated torque. • Right fig. shows example of 150% setup with Pr03= 1. • Pr5E limits the max. torque for both CCW and CW directions. 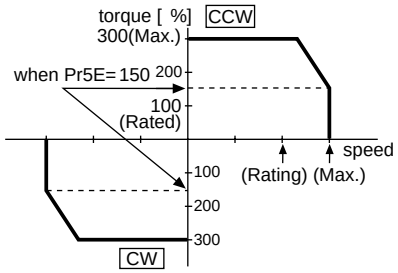 **<Caution>** You cannot set up a larger value to this parameter than the default setup value of "Max. output torque setup" of System parameter (which you cannot change through operation with PANATERM® or panel). Default value varies depending on the combination of the motor and the driver. For details, refer to P.57, "Setup of Torque Limit " of Preparation.
5F	2nd torque limit setup	0 to 500 <500> *2	%	

<Note>

• For parameters which default. has a suffix of "*2", value varies depending on the combination of the driver and the motor.

Parameters for Sequence

Standard default : < >

PrNo.	Title	Setup range	Unit	Function/Content
60	Positioning complete(In-position) range	0 to 32767 <131>	Pulse	You can set up the timing to feed out the positioning complete signal (COIN : CN X5, Pin-39). The positioning complete signal (COIN) will be fed out when the deviation counter pulse counts fall within ± (the setup value), after the command pulse entry is completed. The setup unit should be the encoder pulse counts at the position control and the external scale pulse counts at the full-closed control. • Basic unit of deviation pulse is encoder "resolution", and varies per the encoder as below. (1) 17-bit encoder : 2^{17} = 131072 (2) 2500P/r encoder : 4 X 2500 = 10000 **<Cautions>** 1. If you set up too small value to Pr60, the time until the COIN signal is fed might become longer, or cause chattering at output. 2. The setup of "Positioning complete range" does not give any effect to the final positioning accuracy. 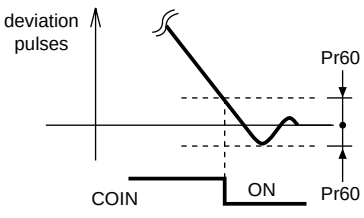

Standard default : < >

<table>
<tr><th>PrNo.</th><th>Title</th><th>Setup range</th><th>Unit</th><th>Function/Content</th></tr>
<tr><td>61</td><td>Zero-speed</td><td>10 to 20000 <50></td><td>r/min</td><td>You can set up the timing to feed out the zero-speed detection output signal (ZSP : CN X5, Pin-12 or TCL : CN X5, Pin-40) in rotational speed [r/min] . The zero-speed detection signal (ZSP) will be fed out when the motor speed falls below the setup of this parameter, Pr61.
• The setup of P61 is valid for both CCW and CW direction regardless of the motor rotating direction.
• There is hysteresis of 10 [r/min] .
 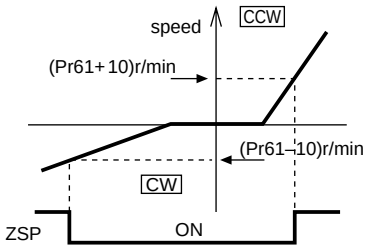
</td></tr>
<tr><td>63</td><td>Setup of positioning complete (In-position) output</td><td>0 to 3 <0></td><td>–</td><td>You can set up the action of the positioning complete signal (COIN : Pin-39 of CN X5) in combination with Pr60 (Positioning complete range).
<table>
<tr><th>Setup value</th><th>Action of positioning complete signal</th></tr>
<tr><td><0></td><td>The signal will turn on when the positional deviation is smaller than Pr60 (Positioning complete range)</td></tr>
<tr><td>1</td><td>The signal will turn on when there is no position command and the positional deviation is smaller than Pr60 (Positioning complete range).</td></tr>
<tr><td>2</td><td>The signal will turn on when there is no position command, the zero-speed detection signal is ON and the positional deviation is smaller than Pr60 (Positioning complete range).</td></tr>
<tr><td>3</td><td>The signal will turn on when there is no position command and the positional deviation is smaller than Pr60 (Positioning complete range). Then holds "ON" status until the next position command is entered.</td></tr>
</table></td></tr>
<tr><td>65</td><td>LV trip selection at main power OFF</td><td>0 to 1 <1></td><td>–</td><td>You can select whether or not to activate Err13 (Main power under-voltage protection) function while the main power shutoff continues for the setup of Pr6D (Main power-OFF detection time).
<table>
<tr><th>Setup value</th><th>Action of main power low voltage protection</th></tr>
<tr><td>0</td><td>When the main power is shut off during Servo-ON, Err13 will not be triggered and the driver turns to Servo-OFF. The driver returns to Servo-ON again after the main power resumption.</td></tr>
<tr><td><1></td><td>When the main power is shut off during Servo-ON, the driver will trip due to Err13 (Main power low voltage protection).</td></tr>
</table>
<Caution>
This parameter is invalid when Pr6D (Detection time of main power OFF)= 1000. Err13 (Main power under-voltage protection) is triggered when setup of P66D is long and P-N voltage of the main converter falls below the specified value before detecting the main power shutoff, regardless of the Pr65 setup. Refer to P.42, "Timing Chart-At Power-ON" of Preparation as well.</td></tr>
<tr><td>66 *</td><td>Sequence at over-travel inhibit</td><td>0 to 2 <0></td><td>–</td><td>You can set up the running condition during deceleration or after stalling, while over-travel inhibit input (CCWL : Connector CN X5, Pin-9 or CWL : Connector CN X5, Pin-8) is valid
<table>
<tr><th>Setup value</th><th>During deceleration</th><th>After stalling</th><th>Deviation counter content</th></tr>
<tr><td><0></td><td>Dynamic brake action</td><td>Torque command= 0 towards inhibited direction</td><td>Hold</td></tr>
<tr><td>1</td><td>Torque command= 0 towards inhibited direction</td><td>Torque command= 0 towards inhibited direction</td><td>Hold</td></tr>
<tr><td>2</td><td>Emergency stop</td><td>Torque command= 0 towards inhibited direction</td><td>Clears before/ after deceleration</td></tr>
</table>
<Caution>
In case of the setup value of 2, torque limit during deceleration will be limited by the setup value of Pr6E (Torque setup at emergency stop).</td></tr>
</table>

<Notes>

• For parameters which No. have a suffix of "*", changed contents will be validated when you turn on the control power.

Standard default : < >

<table>
<tr><th>PrNo.</th><th>Title</th><th>Setup range</th><th>Unit</th><th>Function/Content</th></tr>
<tr><td>67</td><td>Sequence at main power OFF</td><td>0 to 9
<0></td><td>–</td><td>When Pr65 (LV trip selection at main power OFF) is 0, you can set up,
1) the action during deceleration and after stalling
2) the clearing of deviation counter content
after the main power is shut off.
<table>
<tr><th rowspan="2">Setup value</th><th colspan="2">Action</th><th rowspan="2">Deviation counter content</th></tr>
<tr><th>During deceleration</th><th>After stalling</th></tr>
<tr><td><0></td><td>DB</td><td>DB</td><td>Clear</td></tr>
<tr><td>1</td><td>Free-run</td><td>DB</td><td>Clear</td></tr>
<tr><td>2</td><td>DB</td><td>Free-run</td><td>Clear</td></tr>
<tr><td>3</td><td>Free-run</td><td>Free-run</td><td>Clear</td></tr>
<tr><td>4</td><td>DB</td><td>DB</td><td>Hold</td></tr>
<tr><td>5</td><td>Free-run</td><td>DB</td><td>Hold</td></tr>
<tr><td>6</td><td>DB</td><td>Free-run</td><td>Hold</td></tr>
<tr><td>7</td><td>Free-run</td><td>Free-run</td><td>Hold</td></tr>
<tr><td>8</td><td>Emergency stop</td><td>DB</td><td>Clear</td></tr>
<tr><td>9</td><td>Emergency stop</td><td>Free-run</td><td>Clear</td></tr>
</table>
(DB: Dynamic Brake action)
<Caution>
In case of the setup value of 8 or 9, torque limit during deceleration will be limited by the setup value of Pr6E (Torque setup at emergency stop).</td></tr>
<tr><td>68</td><td>Sequence at alarm</td><td>0 to 3
<0></td><td>–</td><td>You can set up the action during deceleration or after stalling when some error occurs while either one of the protective functions of the driver is triggered.
<table>
<tr><th rowspan="2">Setup value</th><th colspan="2">Action</th><th rowspan="2">Deviation counter content</th></tr>
<tr><th>During deceleration</th><th>After stalling</th></tr>
<tr><td><0></td><td>DB</td><td>DB</td><td>Hold</td></tr>
<tr><td>1</td><td>Free-run</td><td>DB</td><td>Hold</td></tr>
<tr><td>2</td><td>DB</td><td>Free-run</td><td>Hold</td></tr>
<tr><td>3</td><td>Free-run</td><td>Free-run</td><td>Hold</td></tr>
</table>
(DB: Dynamic Brake action)
<Caution>
The content of the deviation counter will be cleared when clearing the alarm. Refer to P.43, "Timing Chart (When an error (alarm) occurs (at Servo-ON command status)" of Preparation.</td></tr>
<tr><td>69</td><td>Sequence at Servo-Off</td><td>0 to 9
<0></td><td>–</td><td>You can set up,
1) the action during deceleration and after stalling
2) the clear treatment of deviation counter is set up.
The relation between the setup value of Pr69 and the action/deviation counter clearance is same as that of Pr67 (Sequence at Main Power Off)
Refer to P.44, "Timing Chart"-Servo-ON/OFF action while the motor is at stall" of Preparation as well.</td></tr>
</table>

<Notes>

- For parameters which No. have a suffix of "*", changed contents will be validated when you turn on the control power.

Standard default : < >

PrNo.	Title	Setup range	Unit	Function/Content
6A	Setup of mechanical brake action at stalling	0 to 100 <0>	2ms	You can set up the time from when the brake release signal (BRK-OFF : CN X5, Pin-10 and 11) turns off to when the motor is de-energized (Servo-free), when the motor turns to Servo-OFF while the motor is at stall. • Set up to prevent a micro-travel/ drop of the motor (work) due to the action delay time (tb) of the brake • After setting up Pr6a ≧ tb, then compose the sequence so as the driver turns to Servo-OFF after the brake is actually activated. 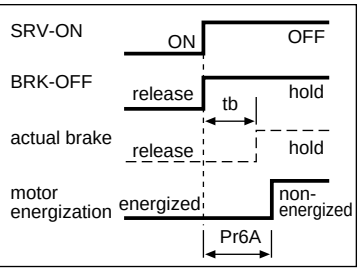 Refer to P.44, "Timing Chart"-Servo-ON/OFF Action While the Motor Is at Stall" of Preparation as well.
6B	Setup of mechanical brake action at running	0 to 100 <0>	2ms	You can set up time from when detecting the off of Servo-ON input signal (SRV-ON : CN X5, Pin-29) is to when external brake release signal (BRK-OFF : CN X5, Pin-10 and 11) turns off, while the motor turns to servo off during the motor in motion. • Set up to prevent the brake deterioration due to the motor running. • At Servo-OFF during the motor is running, tb of the right fig. will be a shorter one of either Pr6B setup time, or time lapse till the motor speed falls below 30r/min. 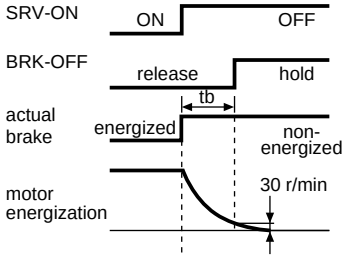 Refer to P.45, "Timing Chart"-Servo-ON/OFF action while the motor is in motion" of Preparation as well.
6C *	Selection of external regenerative resistor	0 to 3 for A, B-frame <3> for C to F-frame <0>	–	With this parameter, you can select either to use the built-in regenerative resistor of the driver, or to separate this built-in regenerative resistor and externally install the regenerative resistor (between RB1 and RB2 of Connector CN X2 in case of A to D-frame, between P and B2 of terminal block in case of E, F-frame).

Setup value	Regenerative resistor to be used	Regenerative processing and regenerative resistor overload
<0> (C, D, E and F-frame)	Built-in resistor	Regenerative processing circuit will be activated and regenerative resistor overload protection will be triggered according to the built-in resistor (approx. 1% duty).
1	External resistor	The driver trips due to regenerative overload protection (Err18), when regenerative processing circuit is activated and its active ratio exceeds 10%,
2	External resistor	Regenerative processing circuit is activated, but no regenerative over-load protection is triggered.
<3> (A, B-frame)	No resistor	Both regenerative processing circuit and regenerative protection are not activated, and built-in capacitor handles all regenerative power.

<Remarks>
Install an external protection such as thermal fuse when you use the external regenerative resistor.
Otherwise, the regenerative resistor might be heated up abnormally and result in burnout, regardless of validation or invalidation of regenerative over-load protection.
<Caution>
When you use the built-in regenerative resistor, never to set up other value than 0. Don't touch the external regenerative resistor.
External regenerative resistor gets very hot, and might cause burning.

Parameter Setup

Standard default : < >

PrNo.	Title	Setup range	Unit	Function/Content
6D *	Detection time of main power off	35 to 1000 <35>	2ms	You can set up the time to detect the shutoff while the main power is kept shut off continuously. The main power off detection is invalid when you set up this to 1000.
6E	Torque setup at emergency stop	0 to 500 <0>	%	You can set up the torque limit in case of emergency stop as below. • During deceleration of over-travel inhibit with the setup 2 of Pr66 (Sequence at over-travel inhibit input) • During deceleration with the setup of 8 or 9 of Pr67 (Sequence at main power off) • During deceleration with the setup of 8 or 9 of Pr69 (Sequence at Servo-OFF) Normal torque limit is used by setting this to 0.
70	Setup of position deviation excess	0 to 32767 <25000>	256 x resolution	• You can set up the excess range of position deviation. • Set up with the encoder pulse counts at the position control and with the external scale pulse counts at the full-closed control. • Err24 (Error detection of position deviation excess) becomes invalid when you set up this to 0.
72	Setup of over-load level	0 to 500 <0>	%	• You can set up the over-load level. The overload level becomes 115 [%] by setting up this to 0. • Use this with 0 setup in normal operation. Set up other value only when you need to lower the over-load level. • The setup value of this parameter is limited by 115[%] of the motor rating.
73	Setup of over-speed level	0 to 20000 <0>	r/min	• You can set up the over-speed level. The over-speed level becomes 1.2 times of the motor max. speed by setting up this to 0. • Use this with 0 setup in normal operation. Set up other value only when you need to lower the over-speed level. • The setup value of this parameter is limited by 1.2 times of the motor max. speed. **<Caution>** The detection error against the setup value is ±3 [r/min] in case of the 7-wire absolute encoder, and ±36 [r/min] in case of the 5-wire incremental encoder.

<Notes>

• For parameters which No. have a suffix of "*", changed contents will be validated when you turn on the control power.

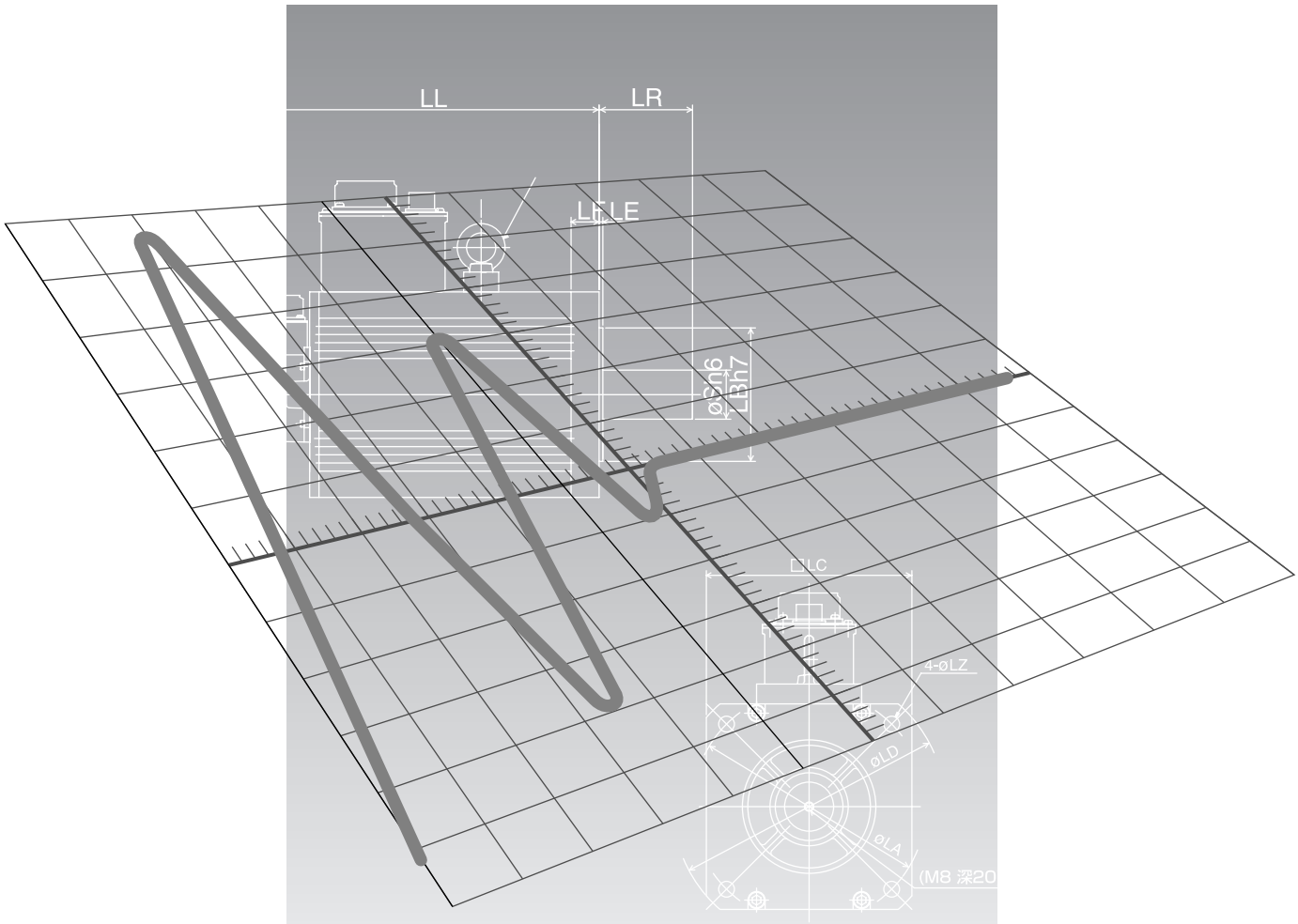

[Connection and Setup of Velocity Control Mode]

page

Control Block Diagram of Velocity Control Mode 126

Wiring to the Connector, CN X5 127

Wiring Example to the Connector, CN X5 127
Interface Circuit 128
Input Signal and Pin No. of the Connector, CN X5 130
Output Signal and Pin No. of the Connector, CN X5 135

Trial Run (JOG Run) at Velocity Control Mode ... 138

Inspection Before Trial Run 138
Trial Run by Connecting the Connector, CN X5 139

Real-Time Auto-Gain Tuning 140

Outline 140
Applicable Range 140
How to Operate 140
Adaptive Filter 141
Parameters Which are Automatically Set 141

Parameter Setup 142

Parameters for Functional Selection 142
Parameters for Adjustment of Time Constant of Gains and Filters 146
Parameters for Auto-Gain Tuning 147
Parameters for Adjustment (2nd Gain Switching Function) 149
Parameters for Position Control 151
Parameters for Velocity/Torque Control 152
Parameters for Sequence 155

Control block diagram of velocity control mode

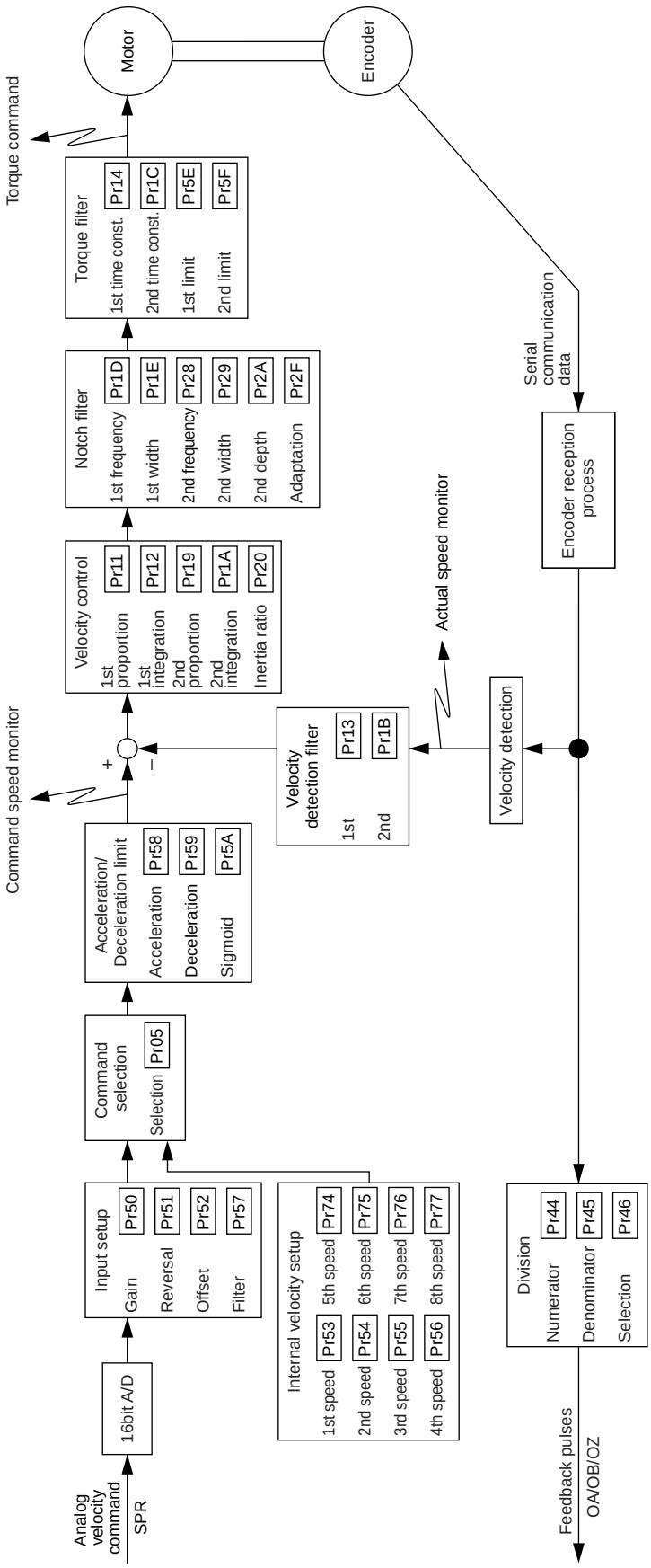

Wiring Example to the Connector CN X5

Wiring Example of Velocity Control Mode

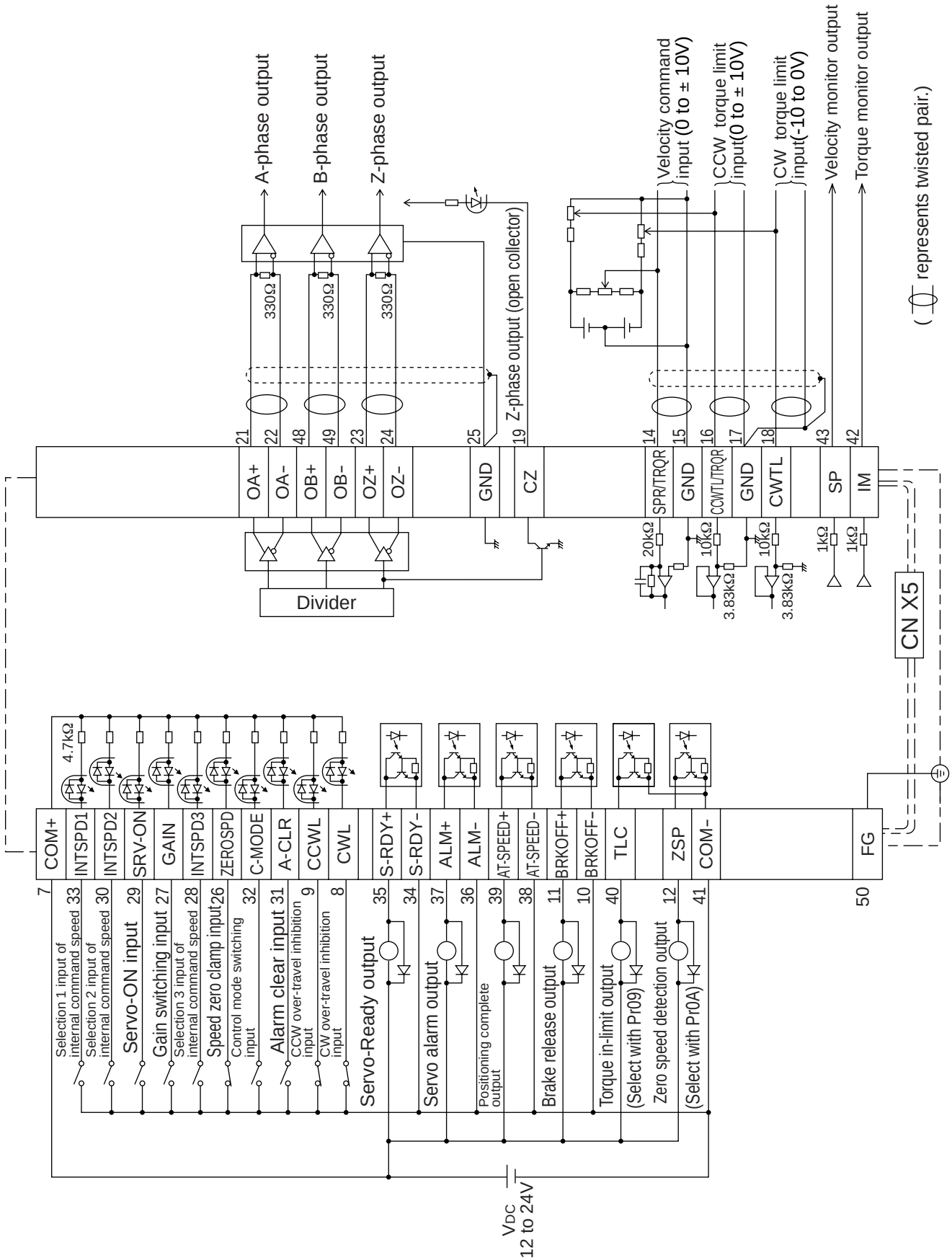

Wiring to the connector, CN X5

Interface Circuit

Input Circuit

SI Connection to sequence input signals

- Connect to contacts of switches and relays, or open collector output transistors.
- When you use contact inputs, use the switches and relays for micro current to avoid contact failure.
- Make the lower limit voltage of the power supply (12 to 24V) as 11.4V or more in order to secure the primary current for photo-couplers.

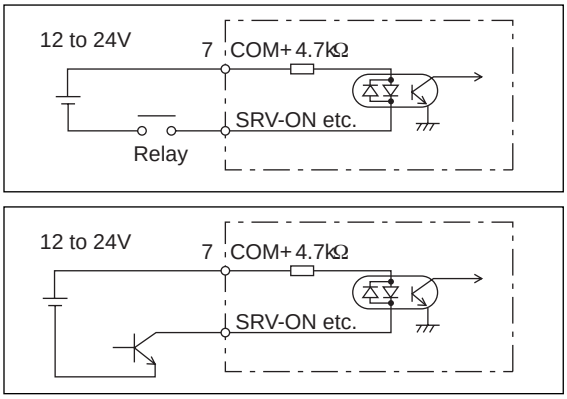

AI Analog command input

- The analog command input goes through 3 routes, SPR/TRQR(Pin-14), CCWTL (Pin-16) and CWTL (Pin-18).
- Max. permissible input voltage to each input is ±10V. For input impedance of each input, refer to the right Fig.
- When you compose a simple command circuit using variable resistor(VR) and register R, connect as the right Fig. shows. When the variable range of each input is made as –10V to +10V, use VR with 2kΩ, B-characteristics, 1/2W or larger, R with 200Ω, 1/2W or larger.
- A/D converter resolution of each command input is as follows.
  (1)ADC1 : 16 bit (SPR/TRQR), (including 1bit for sign), ±10V
  (2)ADC2 : 10 bit (CCWTL, CWTL), 0 to 3.3V

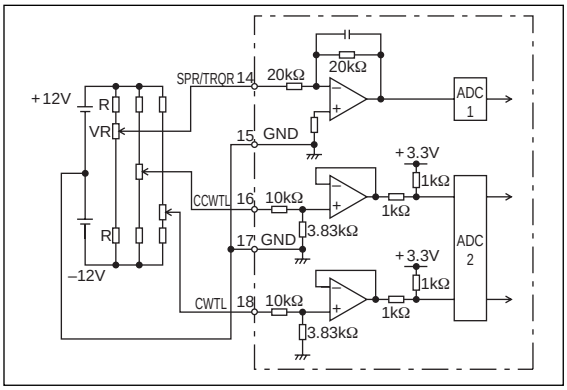

Output Circuit

SO1 SO2 Sequence output circuit

- The output circuit is composed of open collector transistor outputs in the Darlington connection, and connect to relays or photo-couplers.
- There exists collector to emitter voltage, V_{CE} (SAT) of approx. 1V at transistor-ON, due to the Darlington connection of the output or. Note that normal TTL IC cannot be directly connected since it does not meet VIL.
- There are two types of output, one which emitter side of the output transistor is independent and is connectable individually, and the one which is common to – side of the control power supply (COM–).
- If a recommended primary current value of the photo-coupler is 10mA, decide the resistor value using the formula of the right Fig.

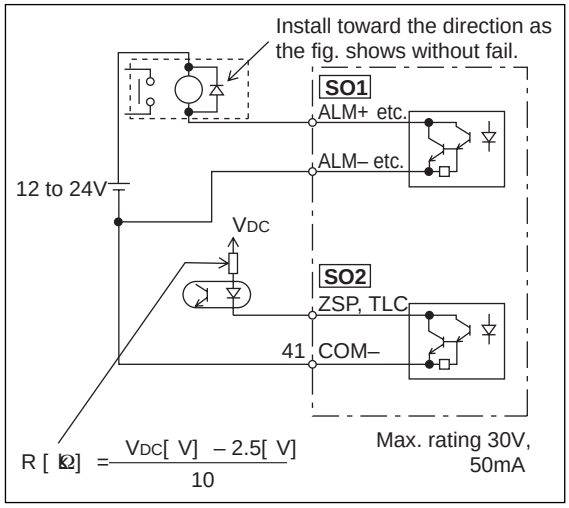

For the recommended primary current value, refer to the data sheet of apparatus or photo-coupler to be used.

PO1 Line driver (Differential output) output

- Feeds out the divided encoder outputs (A, B and Z-phase) in differential through each line driver.
- At the host side, receive these in line receiver. Install a terminal resistor (approx. 330Ω) between line receiver inputs without fail.
- These outputs are not insulated.

represents twisted pair.

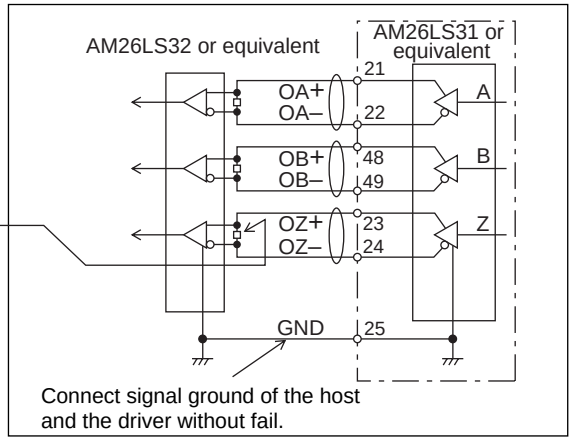

PO2 Open collector output

- Feeds out the Z-phase signal among the encoder signals in open collector. This output is not insulated.
- Receive this output with high-speed photo couplers at the host side, since the pulse width of the Z-phase signal is narrow.

represents twisted pair.

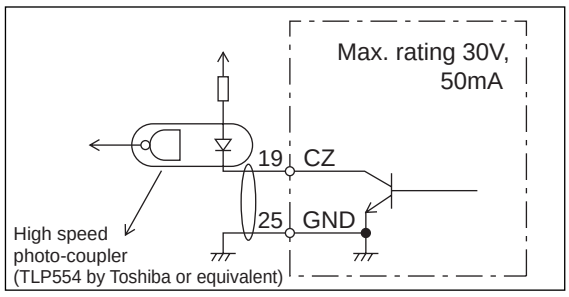

AO Analog monitor output

- There are two outputs, the speed monitor signal output (SP) and the torque monitor signal output (IM)
- Output signal width is ±10V.
- The output impedance is 1kΩ. Pay an attention to the input impedance of the measuring instrument or the external circuit to be connected.

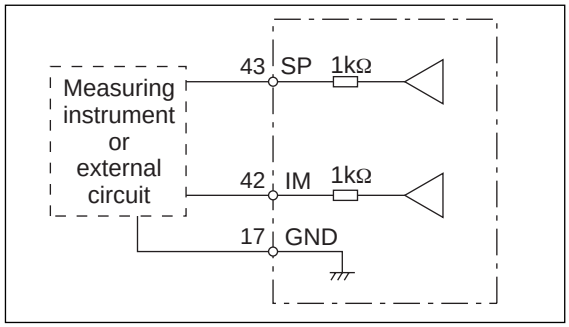

<Resolution>

(1) Speed monitor output (SP)
With a setup of 6V/3000r/min (Pr07=3), the resolution converted to speed is 8r/min/16mV.

(2) Torque monitor output (IM)
With a relation of 3V/rated torque (100%), the resolution converted to torque is 0.4%/12mV.

Wiring to the connector, CN X5

Input Signal and Pin No. of the Connector, CN X5

Input Signals (common) and Their Functions

<table>
<tr><th>Title of signal</th><th>Pin No.</th><th>Symbol</th><th>Function</th><th>I/F circuit</th></tr>
<tr><td>Power supply for control signal (+)</td><td>7</td><td>COM+</td><td>• Connect + of the external DC power supply (12 to 24V).
• Use the power supply voltage of 12V ± 5% – 24V ± 5%</td><td>–</td></tr>
<tr><td>Power supply for control signal (–)</td><td>41</td><td>COM–</td><td>• Connect – of the external DC power supply (12 to 24V).
• The power capacity varies depending on a composition of I/O circuit. 0.5A or more is recommended.</td><td>–</td></tr>
<tr><td>CW over-travel inhibit input</td><td>8</td><td>CWL</td><td>• Use this input to inhibit a CW over-travel (CWL).
• Connect this so as to make the connection to COM– open when the moving portion of the machine over-travels the movable range toward CW.
• CWL input will be invalidated when you set up Pr04 (Setup of over-travel inhibit input) to 1.Default is "Invalid (1)".
• You can select the action when the CWL input is validated with the setup of up Pr66 (Sequence at over-travel inhibit). Default is "Emergency stop with dynamic brake".(Pr66=0)</td><td>SI
P.128</td></tr>
<tr><td>CCW over-travel inhibit input</td><td>9</td><td>CCWL</td><td>• Use this input to inhibit a CCW over-travel (CCWL).
• Connect this so as to make the connection to COM- open when the moving portion of the machine over-travels the movable range toward CCW.
• CWL input will be invalidated when you set up Pr04 (Setup of over-travel inhibit input) to 1.Default is "Invalid (1)".
• You can select the action when the CCWL input is validated with the setup of Pr66 (Sequence at over-travel inhibit). Default is "Emergency stop with dynamic brake".(Pr66=0)</td><td>SI
P.128</td></tr>
<tr><td>Speed zero clamp input</td><td>26</td><td>ZEROSPD</td><td>• Function varies depending on the control mode.
Velocity/ Torque control
• Becomes to a speed-zero clamp input (ZEROSPD).
<table>
<tr><th>Pr06</th><th>Connection to COM–</th><th>Content</th></tr>
<tr><td>0</td><td>–</td><td>ZEROSPD input is invalid.</td></tr>
<tr><td rowspan="2">1</td><td>open</td><td>Speed command is 0</td></tr>
<tr><td>close</td><td>Normal action</td></tr>
<tr><td rowspan="2">2</td><td>open</td><td>Speed command is to CCW</td></tr>
<tr><td>close</td><td>Speed command is to CW.</td></tr>
</table>
• In case Pr06 is 2 at torque control, ZERPSPD is invalid.
Position/ Full-closed control
• Becomes to an input of damping control switching (VS-SEL).
• While Pr24 (Damping filter switching selection) is 1, the 1st damping filter (Pr2B, Pr2C) will be validated when you open this input, and the 2nd damping filter (Pr2D, Pr2E) will be validated when you connect this input to COM–.</td><td>SI
P.128</td></tr>
<tr><td>Gain switching input
or
Torque limit switching input</td><td>27</td><td>GAIN

TL-SEL</td><td>• Function varies depending on the setups of Pr30 (2nd gain setup) and Pr03 (Selection of torque limit).
<table>
<tr><th>Pr03</th><th>Pr30</th><th>Connection to COM–</th><th>Content</th></tr>
<tr><td rowspan="6">0 – 2</td><td rowspan="2">0</td><td>open</td><td>Velocity loop : PI (Proportion/Integration) action</td></tr>
<tr><td>close</td><td>Velocity loop : P (Proportion) action</td></tr>
<tr><td rowspan="4">1</td><td colspan="2">when the setups of Pr31 and Pr36 are 2</td></tr>
<tr><td>open</td><td>1st gain selection (Pr10,11,12,13 and 14)</td></tr>
<tr><td>close</td><td>2nd gain selection (Pr18,19,1A,1B and 1C)</td></tr>
<tr><td colspan="2">when the setups of Pr31 and Pr36 are other than 2</td></tr>
<tr><td colspan="3">invalid</td></tr>
<tr><td>3</td><td>–</td><td colspan="2">• Input of torque limit switching (TL-SEL)
• Pr5E (Setup of 1st torque limit) will be validated when you open this input, and Pr5F (Setup of 2nd torque limit) will be validated when you connect this input to COM–.</td></tr>
</table>
• For details of 2nd gain switching function, refer to P.243 "Gain Switching Function" of Adjustment.</td><td>SI
P.128</td></tr>
</table>

Title of signal	Pin No.	Symbol	Function	I/F circuit
Internal command speed selection 3 input	**28**	**INTSPD3**	• Function varies depending on the control mode. **Position/ Full-closed control**: • You can switch the numerator of electronic gear. • By connecting to COM–, you can switch the numerator of electronic gear from Pr48 (1st numerator of electronic gear) to Pr49 (2nd numerator of electronic gear) • For the selection of command division/multiplication, refer to the table of next page, "Numerator selection of command scaling" **Velocity control**: • Input of internal speed selection 3 (INTSPD3). • You can make up to 8-speed setups combining INH/ INTSPD1 and CL/INTSPD2 inputs. For details of setup, refer to the table of P.131, "Selection of Internal Speed". **Torque control**: • This input is invalid.	SI P.128
Servo-ON input	**29**	**SRV-ON**	• Turns to Servo-ON status by connecting this input to COM–. • Turns to Servo-OFF status by opening connection to COM–, and current to the motor will be shut off. • You can select the dynamic brake action and the deviation counter clearing action at Servo-OFF with Pr69 (Sequence at Servo-OFF). **<Caution>** 1.Servo-ON input becomes valid approx. 2 sec after power-on. (see P.42, "Timing Chart" of Preparation.) 2.Never run/stop the motor with Servo-ON/OFF. 3.After shifting to Servo-ON, allow 100ms or longer pause before entering the pulse command.	SI P.128

• Selection of Internal Speed

Connector Pin No. of X5			Pr05, Internal/external switching of speed setup			
Pin-33 INTSPD1(INH)	Pin-30 INTSPD2(CL)	Pin-28 INTSPD3(DIV)	0	1	2	3
open	open	open	Analog speed command (CN X5, Pin-14)	1st speed of speed setup (Pr53)	1st speed of speed setup (Pr53)	1st speed of speed setup (Pr53)
short	open	open	Analog speed command (CN X5, Pin-14)	2nd speed of speed setup (Pr54)	2nd speed of speed setup (Pr54)	2nd speed of speed setup (Pr54)
open	short	open	Analog speed command (CN X5, Pin-14)	3rd speed of speed setup (Pr55)	3rd speed of speed setup (Pr55)	3rd speed of speed setup (Pr55)
short	short	open	Analog speed command (CN X5, Pin-14)	4th speed of speed setup (Pr56)	Analog speed command (CN X5, Pin-14)	4th speed of speed setup (Pr56)
open	open	short	Analog speed command (CN X5, Pin-14)	1st speed of speed setup (Pr53)	1st speed of speed setup (Pr53)	5th speed of speed setup (Pr74)
short	open	short	Analog speed command (CN X5, Pin-14)	2nd speed of speed setup (Pr54)	2nd speed of speed setup (Pr54)	6th speed of speed setup (P75)
open	short	short	Analog speed command (CN X5, Pin-14)	3rd speed of speed setup (Pr55)	3rd speed of speed setup (Pr55)	7th speed of speed setup (Pr76)
short	short	short	Analog speed command (CN X5, Pin-14)	4th speed of speed setup (Pr56)	Analog speed command (CN X5, Pin-14)	8th speed of speed setup (Pr77)

Wiring to the connector, CN X5

<table>
<tr><th>Title of signal</th><th>Pin No.</th><th>Symbol</th><th>Function</th><th>I/F circuit</th></tr>
<tr><td>Selection 2 input of internal command speed</td><td>30</td><td>INTSPD2</td><td>• Function varies depending on the control mode.
Position/ Full-closed control
• Input (CL) which clears the positional deviation counter and full-closed deviation counter.
• You can clear the counter of positional deviation and full-closed deviation by connecting this to COM–.
• You can select the clearing mode with Pr4E (Counter clear input mode).
<table><tr><th>Pr4E</th><th>Content</th></tr><tr><td>0</td><td>Clears the counter of positional deviation and full-closed deviation while CL is connected to COM–.</td></tr><tr><td>1
[Default]</td><td>Clears the counter of positional deviation and full-closed deviation only once by connecting CL to COM– from open status.</td></tr><tr><td>2</td><td>CL is invalid</td></tr></table>Velocity control
• Input of selection 2 of internal command speed (INTSPD2)
• You can make up to 8-speed setups combining INH/ INTSPD1 and CL/INTSPD3 inputs. For details of setup, refer to the table in P.131, "Selection of Internal Speed" of Velocity Control Mode.
Torque control
• This input is invalid.</td><td>SI
P.128</td></tr>
<tr><td>Alarm clear input</td><td>31</td><td>A-CLR</td><td>• You can release the alarm status by connecting this to COM– for more than 120ms.
• The deviation counter will be cleared at alarm clear.
• There are some alarms which cannot be released with this input.
For details, refer to P.252, "Protective Function " of When in Trouble.</td><td>SI
P.128</td></tr>
<tr><td>Control mode switching input</td><td>32</td><td>C-MODE</td><td>• You can switch the control mode as below by setting up Pr02 (Control mode setup) to 3-5.
<table><tr><th>Pr02 setup</th><th>Open (1st)</th><th>Connection to COM– (2nd)</th></tr><tr><td>3</td><td>Position control</td><td>Velocity control</td></tr><tr><td>4</td><td>Position control</td><td>Torque control</td></tr><tr><td>5</td><td>Velocity control</td><td>Torque control</td></tr></table><Caution>
Depending on how the command is given at each control mode, the action might change rapidly when switching the control mode with C-MODE. Pay an extra attention.</td><td>SI
P.128</td></tr>
<tr><td>Selection 1 input of internal command speed</td><td>33</td><td>INTSPD1</td><td>• Function varies depending on the control mode.
Position/ Full closed control
• Inhibition input of command pulse input (INH)
• Ignores the position command pulse by opening the connection to COM–
• You can invalidate this input with Pr43 (Invalidation of command pulse inhibition input)
<table><tr><th>Pr43</th><th>Content</th></tr><tr><td>0</td><td>INH is valid.</td></tr><tr><td>1(Default)</td><td>INH is valid.</td></tr></table>Velocity control
• Selection 1 input of internal command speed (INTSPD1)
•You can make up to 8-speed setups combining INH/INTSPD2 and CL/INTSPD3 inputs. For details of the setup, refer to the table of P.131, "Selection of Internal Speed" of Velocity Control Mode.
Torque control
• This input is invalid.</td><td>SI
P.128</td></tr>
</table>

Input Signals (Analog Command) and Their Functions

<table>
<tr><th>Title of signal</th><th>Pin No.</th><th>Symbol</th><th>Function</th><th>I/F circuit</th></tr>
<tr><td>Speed command input</td><td>14</td><td>SPR</td><td>
• Function varies depending on control mode.
<table>
<tr><th>Pr02</th><th>Control mode</th><th>Function</th></tr>
<tr><td>1
3
5</td><td>Velocity control
Position/ Velocity
Velocity/ Torque</td><td>• Input of external speed command (SPR) when the velocity control is selected.
• Set up the gain, polarity, offset and filter of the Speed command with;
Pr50 (Speed command input gain)
Pr51 (Speed command input reversal)
Pr52 (Speed command offset)
Pr57 (Speed command filter setup)</td></tr>
<tr><td>5</td><td>Velocity/ Torque</td><td>• Function varies depending on Pr5B (Selection of torque command)
<table>
<tr><th>Pr5B</th><th>Content</th></tr>
<tr><td>0</td><td>• This input becomes invalid.</td></tr>
<tr><td>1</td><td>• Speed limit (SPL) will be selected.
• Set up the speed limit (SPL) gain, offset and filter with;
Pr50 (Speed command input gain)
Pr52 (Speed command offset)
Pr57 (Speed command filter setup)</td></tr>
</table>
</td></tr>
<tr><td>Others</td><td>Other control mode</td><td>• This input is invalid.</td></tr>
</table>
•The resolution of the A/D converter used in this input is 16 bit (including 1 bit for sign).
± 32767 (LSB) = ± 10[V] , 1[LSB] = 0.3[mV]
</td><td>AI
P.128</td></tr>
</table>

*Function becomes valid when the control mode with underline (▭ / ▭) is selected while the switching mode is used in the control mode in table.

<Remark>

Do not apply voltage exceeding ±10V to analog command input of SPR

Wiring to the connector, CN X5

<table>
<tr><th>Title of signal</th><th>Pin No.</th><th>Symbol</th><th>Function</th><th>I/F circuit</th></tr>
<tr><td>CCW-Torque limit input</td><td>16</td><td>CCWTL</td><td>• Function varies depending on Pr02 (Control mode setup).
<table>
<tr><th>Pr02</th><th>Control mode</th><th>Function</th></tr>
<tr><td>2
4</td><td>Torque Control
Position/Torque</td><td>• Function varies depending on Pr5B (Selection of torque command)
<table>
<tr><th>Pr5B</th><th>Content</th></tr>
<tr><td>0</td><td>This input becomes invalid.</td></tr>
<tr><td>1</td><td>• Torque command input (TRQR) will be selected.
• Set up the gain and polarity of the command with;
Pr5C (Torque command input gain)
Pr5D (Torque command input reversal)
• Offset and filter cannot be set up.</td></tr>
</table></td></tr>
<tr><td>5</td><td>Velocity/
Torque</td><td>• Becomes to the torque command input (TRQR).
• Set up the gain and polarity of the command with;
Pr5C (Torque command input gain)
Pr5D (Torque command input reversal)
• Offset and filter cannot be set up.</td></tr>
<tr><td>4
5
Other</td><td>Position/Torque
Velocity/Torque
Other
control mode</td><td>• Becomes to the analog torque limit input to CCW (CCWTL).
• Limit the CCW-torque by applying positive voltage (0 to +10V) (Approx.+3V/rated toque)
• Invalidate this input by setting up Pr03 (Torque limit selection) to other than 0.</td></tr>
</table>
• Resolution of A/D converter used in this input is 16 bit (including 1 bit for sign).
± 511 [LSB] ≒ 11.9[V] , 1 [LSB] ≒ 23[mV]</td><td>AI
P.128</td></tr>
<tr><td>CW-Torque limit input</td><td>18</td><td>CWTL</td><td>• Function varies depending on Pr02 (Control mode setup).
<table>
<tr><th>Pr02</th><th>Control mode</th><th>Function</th></tr>
<tr><td>2
4
5</td><td>Torque control
Position/Torque
Velocity/Torque</td><td>• This input becomes invalid when the torque control is selected.</td></tr>
<tr><td>4
5
Other</td><td>Position/Torque
Velocity/Torque
Other
control mode</td><td>• Becomes to the analog torque limit input to CW (CWTL).
• Limit the CW-torque by applying negative voltage (0 to –10V) (Approx.+3V/rated toque).
Invalidate this input by setting up Pr03 (Torque limit selection) to other than 0.</td></tr>
</table>
• Resolution of A/D converter used in this input is 16 bit (including 1 bit for sign).
± 511 [LSB] ≒ 11.9[V] , 1 [LSB] ≒ 23[mV]</td><td>AI
P.128</td></tr>
</table>

*Function becomes valid when the control mode with underline (▭ / ▭) is selected while the switching mode is used in the control mode in table.

<Remark>

Do not apply voltage exceeding ±10V to analog command input of CWTL and CCWTL

Output signal and Pin No. of the Connector, CN X5

Output Signals (Common) and Their Functions

Title of signal	Pin No	Symbol	Function	I/F circuit
External brake release signal	**11** **10**	**BRKOFF+** **BRKOFF–**	• Feeds out the timing signal which activates the electromagnetic brake of the motor. • Turns the output transistor ON at the release timing of the electro-magnetic brake. • You can set up the output timing of this signal with Pr6A (Setup of mechanical brake action at stall) and Pr6B (Setup of mechanical brake action at motion). For details, refer to P42, "Timing Chart" of Preparation.)	SO1 P.129
Servo-Ready output	**35** **34**	**S-RDY+** **S-RDY–**	• This signal shows that the driver is ready to be activated. • Output transistor turns ON when both control and main power are ON but not at alarm status.	SO1 P.129
Servo-Alarm output	**37** **36**	**ALM+** **ALM–**	• This signal shows that the driver is in alarm status.. • Output transistor turns ON when the driver is at normal status, and turns OFF at alarm status.	SO1 P.129
Positioning complete (In-position)	**39** **38**	**AT-SPEED+** **AT-SPEED–**	• Function varies depending on the control mode. **Position control**: • Output of positioning complete (COIN) • The output transistor will turn ON when the absolute value of the position deviation pulse becomes smaller than the setup value of Pr60 (Positioning complete range). • You can select the feeding out method with Pr63 (Setup of positioning complete output). **Full-closed control**: • Output of full-closed positioning complete (EX-COIN) • The output transistor will turn ON when the absolute value of full-closed-position deviation pulse becomes smaller than the setup value of Pr60 (Positioning complete range). • You can select the feeding out method with Pr63 (Setup of positioning complete output). **Velocity/ Torque control**: • Output at-speed (speed arrival) (AT-SPEED) • The output transistor will turn ON when the actual motor speed exceeds the setup value of Pr62 (In-speed).	SO1 P.129
Zero-speed detection output signal	**12** **(41)**	**ZSP** **(COM–)**	• Content of the output signal varies depending on Pr0A (Selection of ZSP output). • Default is 1, and feeds out the zero speed detection signal. • For details, see the table below, "Selection of TLC,ZSP output".	SO2 P.129
Torque in-limit signal output	**40** **(41)**	**TLC** **(COM–)**	• Content of the output signal varies depending on Pr09 (Selection of TLC output). • Default is 1, and feeds out the torque in-limit signal. • For details, see the table below, "Selection of TLC,ZSP output".	SO2 P.129

• Selection of TCL and ZSP outputs

Value of Pr09 or Pr0A	X5 TLC : Output of Pin-40	X5 ZSP : Output of Pin-12
0	**• Torque in-limit output (Default of X5 TLC Pr09)** The output transistor turns ON when the torque command is limited by the torque limit during Servo-ON.	
1	**• Zero-speed detection output (Default of X5 ZSP Pr0A)** The output transistor turns ON when the motor speed falls under the preset value with Pr61.	
2	**• Alarm signal output** The output transistor turns ON when either one of the alarms is triggered, over-regeneration alarm, overload alarm, battery alarm, fan-lock alarm or external scale alarm.	
3	**• Over-regeneration alarm** The output transistor turns ON when the regeneration exceeds 85% of the alarm trigger level of the regenerative load protection.	
4	**• Over-load alarm** The output transistor turns ON when the load exceeds 85% of the alarm trigger level of the overload alarm.	
5	**• Battery alarm** The output transistor turns ON when the battery voltage for absolute encoder falls lower than approx. 3.2V.	
6	**• Fan-lock alarm** The output transistor turns ON when the fan stalls for longer than 1s.	
7	**• External scale alarm** The output transistor turns ON when the external scale temperature exceeds 65°, or signal intensity is not enough (adjustment on mounting is required). Valid only at the full-closed control.	
8	**• In-speed (Speed coincidence) output** The output transistor turns ON when the difference between the actual motor speed and the speed command before acceleration/deceleration reaches within the preset range with Pr61. Valid only at the velocity and torque control.	

Wiring to the connector, CN X5

Output Signals (Pulse Train) and Their Functions

Title of signal	Pin No	Symbol	Function	I/F circuit
A-phase output	**21**	**OA +**	• Feeds out the divided encoder signal or external scale signal (A, B, Z-phase) in differential. (equivalent to RS422) • You can set up the division ratio with Pr44 (Numerator of pulse output division) and Pr45 (Denominator of pulse output division) • You can select the logic relation between A-phase and B-phase, and the output source with Pr46 (Reversal of pulse output logic). • When the external scale is made as an output source, you can set up the interval of Z-phase pulse output with Pr47 (Setup of external scale Z-phase). • Ground for line driver of output circuit is connected to signal ground (GND) and is not insulated. • Max. output frequency is 4Mpps (after quadrupled)	PO1 P.129
	22	**OA –**		
B-phase output	**48**	**OB +**		
	49	**OB –**		
Z-phase output	**23**	**OZ +**		
	24	**OZ –**		
Z-phase output	**19**	**CZ**	• Open collector output of Z-phase signal • The emitter side of the transistor of the output circuit is connected to the signal ground (GND) and is not insulated.	PO2 P.129

<Note>

• When the output source is the encoder

• If the encoder resolution X $\frac{Pr44}{Pr45}$ is multiple of 4, Z-phase will be fed out synchronizing with A-phase.

In other case, the Z-phase width will be equal to the encoder resolution, and will not synchronize with A-phase because of narrower width than that of A-phase.

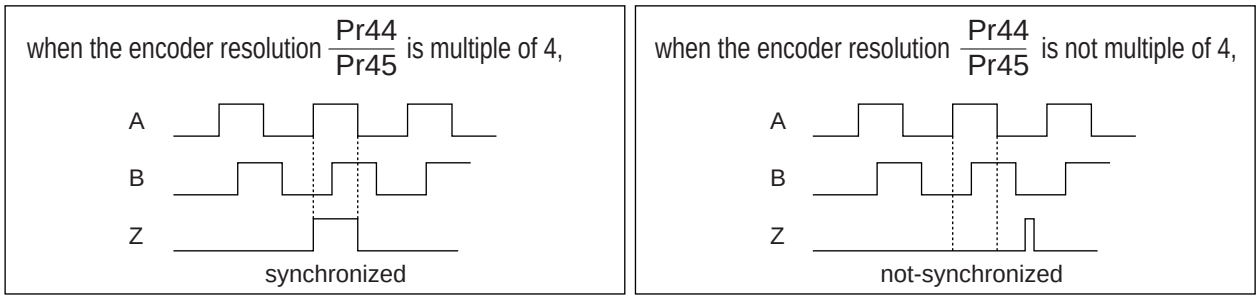

• In case of the 5-wire, 2500P/r incremental encoder, the signal sequence might not follow the above fig. until the first Z-phase is fed out. When you use the pulse output as the control signal, rotate the motor one revolution or more to make sure that the Z-phase is fed out at least once before using.

Output Signals (Analog) and Their Functions

<table>
<tr><th>Title of signal</th><th>Pin No</th><th>Symbol</th><th>Function</th><th>I/F circuit</th></tr>
<tr><td>Torque monitor signal output</td><td>42</td><td>IM</td><td>• The content of output signal varies depending on Pr08 (Torque monitor (IM) selection).
• You can set up the scaling with Pr08 value.
<table>
<tr><th>Pr08</th><th>Content of signal</th><th>Function</th></tr>
<tr><td>0, 11,12</td><td>Torque command</td><td>• Feeds out the voltage in proportion to the motor torque command with polarity.
+ : generates CCW torque
– : generates CW torque</td></tr>
<tr><td>1 – 5</td><td>Positional deviation</td><td>• Feeds out the voltage in proportion to the positional deviation pulse counts with polarity.
+ : positional command to CCW of motor position
– : positional command to CW of motor position</td></tr>
<tr><td>6 –10</td><td>Full-closed deviation</td><td>• Feeds out the voltage in proportion to the full-closed deviation pulse counts with polarity.
+ : positional command to CCW of external scale position
– : positional command to CW of external scale position</td></tr>
</table></td><td>AO
P.129</td></tr>
<tr><td>Speed monitor signal output</td><td>43</td><td>SP</td><td>• The content of the output signal varies depending on Pr07 (Speed monitor (IM) selection).
• You can set up the scaling with Pr07 value.
<table>
<tr><th>Pr07</th><th>Control mode</th><th>Function</th></tr>
<tr><td>0 – 4</td><td>Motor speed</td><td>• Feeds out the voltage in proportion to the motor speed with polarity. + : rotates to CCW
– : rotates to CW</td></tr>
<tr><td>5 – 9</td><td>Command speed</td><td>• Feeds out the voltage in proportion to the command speed with polarity.
+ : rotates to CCW
– : rotates to CW</td></tr>
</table></td><td>AO
P.129</td></tr>
</table>

Output Signals (Others) and Their Functions

Title of signal	Pin No	Symbol	Function	I/F circuit
Signal ground	**13,15, 17,25**	**GND**	• Signal ground • This output is insulated from the control signal power (COM–) inside of the driver.	–
Frame ground	**50**	**FG**	• This output is connected to the earth terminal inside of the driver.	–

Trial Run (JOG run) at Velocity Control Mode

Inspection Before Trial Run

(1) Wiring inspection

- Miswiring
  (Especially power input/motor output)
- Short/Earth
- Loose connection

(2) Check of power/voltage

- Rated voltage

(3) Fixing of the motor

- Unstable fixing

(4) Separation from mechanical system

(5) Release of the brake

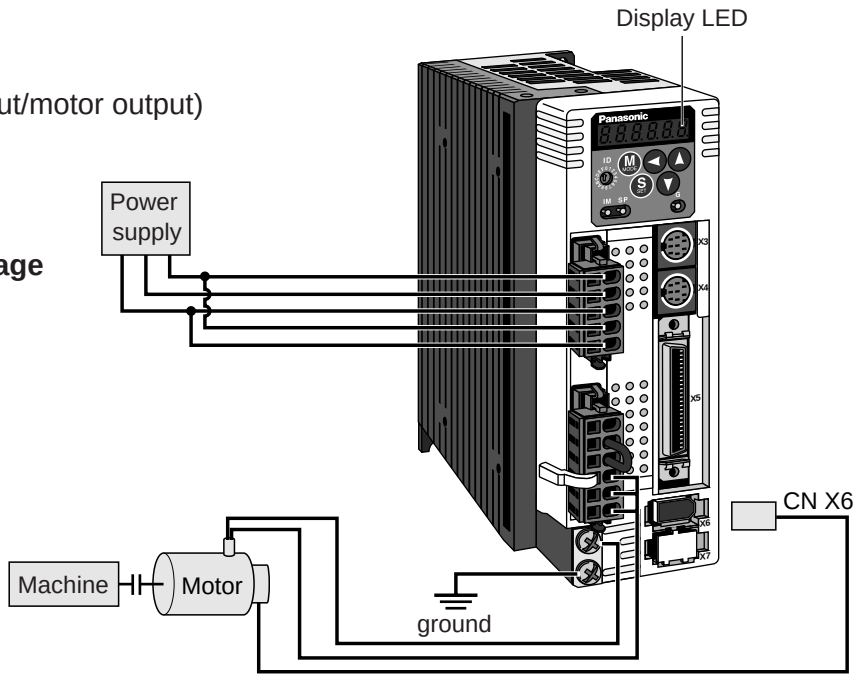

Trial Run by Connecting the Connector, CN X5

1) Connect the CN X5.
2) Enter the power (DC12-24V) to control signal (COM+ , COM–)
3) Enter the power to the driver.
4) Confirm the default values of parameters.
5) Connect the Servo-ON input (SRV-ON, CN X5, Pin-29) and COM– (CN X5, Pin-14) to turn to Servo-ON and energize the motor.
6) Close the speed zero clamp input (ZEROSPD) and apply DC voltage between velocity command input , SPR (CN X5, Pin-14) and GND (CN X5, Pin-15), and gradually increase from 0V to confirm the motor runs.
7) Confirm the motor rotational speed in monitor mode.
   • Whether the rotational speed is per the setup or not.
   • Whether the motor stops with zero command or not.
8) If the motor does rotate at a micro speed with command voltage of 0, correct the command voltage referring to P.74, "Automatic offset adjustment" of Preparation.
9) When you want to change the rotational speed and direction, set up the following parameters again.

Pr50 : Speed command input gain
Pr51 : Speed command input reversal
} Refer to P.152, "Parameter Setup" (Parameters for Velocity/Torque Control)

10)If the motor does not run correctly, refer to P.68, "Display of Factor for No-Motor Running" of Preparation.

Wiring Diagram

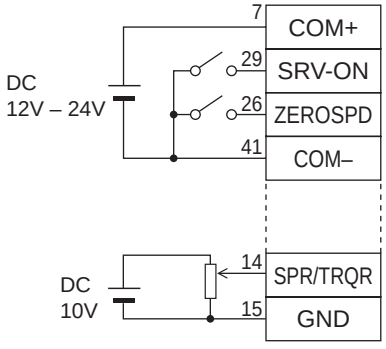

Run with ZEROSPD switch close, and Stop with open

In case of one-directional operation

In case of bi-directional operation (CW/CCW), provide a bipolar power supply, or use with Pr06 = 3.

Parameter

PrNo.	Title	Setup value
02	Setup of control mode	1
04	Invalidation of over-travel inhibit input	1
06	Selection of ZEROSPD input	1
50	Velocity command gain	Set up as required
51	Velocity command reversal	
52	Velocity command offset	
57	Setup of velocity command filter	

Input signal status

No.	Title of signal	Monitor display
0	Servo-ON	+A
5	Speed zero clamp	–

Real-Time Auto-Gain Tuning

Outline

The driver estimates the load inertia of the machine in real time, and automatically sets up the optimum gain responding to the result. Also the driver automatically suppress the vibration caused by the resonance with an adaptive filter.

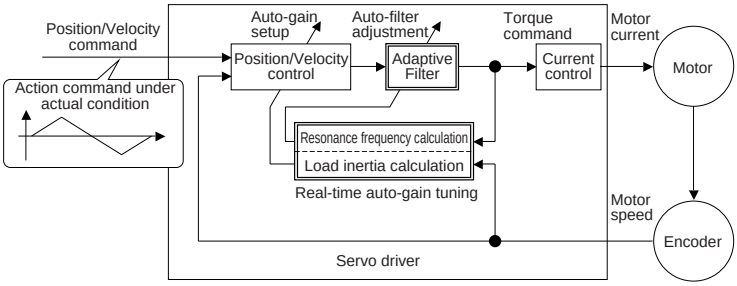

Applicable Range

- Real-time auto-gain tuning is applicable to all control modes.

Caution

Real-time auto-gain tuning may not be executed properly under the conditions described in the right table. In these cases, use the normal mode auto-gain tuning (refer to P.236 of Adjustment), or execute a manual gain tuning. (refer to P.240, of Adjustment)

	Conditions which obstruct real-time auto-gain tuning
Load inertia	• Load is too small or large compared to rotor inertia. (less than 3 times or more than 20 times) • Load inertia change too quickly. (10 [s] or less)
Load	• Machine stiffness is extremely low. • Chattering such as backlash exists.
Action pattern	• Motor is running continuously at low speed of 100 [r/min] or lower. • Acceleration/deceleration is slow (2000[r/min] per 1[s] or low). • Acceleration/deceleration torque is smaller than unbalanced weighted/viscous friction torque. • When speed condition of 100[r/min] or more and acceleration/deceleration condition of 2000[r/min] per 1[s] are not maintained for 50[ms] .

How to Operate

(1) Bring the motor to stall (Servo-OFF).
(2) Set up Pr21 (Real-time auto-gain tuning mode setup) to 1-7. Default is 1.

Setup value	Real-time auto-gain tuning	Varying degree of load inertia in motion
0	(not in use)	–
<1>,4,7	normal mode	no change
2,5		slow change
3,6		rapid change

- When the varying degree of load inertia is large, set up 3 or 6.
- When resonance might give some effect, validate the setup of Pr23 (Setup of adaptive filter mode).

(3) Set up Pr22 (Machine stiffness at real-time auto-gain tuning) to 0 or smaller value.
(4) Turn to Servo-ON to run the machine normally.
(5) Gradually increase Pr22 (Machine stiffness at real-time auto-gain tuning) when you want to obtain better response. Lower the value (0 to 3) when you experience abnormal noise or oscillation.
(6) Write to EEPROM when you want to save the result.

Insert the console connector to CN X6 of the driver, then turn on the driver power. → r 0

Setup of parameter, Pr21

Press (S). → dP_SPd
Press (M). → PA_ 00
Match to the parameter No. to be set up with (▲)(▼). (Here match to Pr21.) → PA_ 21
Press (S). → 1
Change the setup with (▲)(▼).
Press (S). → PA_ 21

Setup of parameter, Pr22

Match to Pr22 with (▲). → PA_ 22
Press (S). → 4 (default values)
Numeral increases with (▲), and decreases with (▼).
Press (S).

Writing to EEPROM

Press (M). → EE_SEt
Press (S). → EEP -
Bars increase as the right fig. shows by keep pressing (▲) (approx. 5sec). → EEP --, ------
Writing starts (temporary display). → StArt

Finish → FinISh (Writing completes) / rESEt / Error (Writing error occurs)

Return to SELECTION display after writing finishes, referring to "Structure of each mode"(P.60 and 61 of Preparation).

Adaptive Filters

The adaptive filter is validated by setting up Pr23 (Setup of adaptive filter mode) to other than 0.
The adaptive filter automatically estimates a resonance frequency out of vibration component presented in the motor speed in motion, then removes the resonance components from the torque command by setting up the notch filter coefficient automatically, hence reduces the resonance vibration.
The adaptive filter may not operate property under the following conditions. In these cases, use 1st notch filter (Pr1D and 1E) and 2nd notch filter (Pr28-2A) to make measures against resonance according to the manual adjusting procedures.
For details of notch filters, refer to P.246, "Suppression of Machine Resonance" of Adjustment.

	Conditions which obstruct adaptive filter action
Resonance point	• When resonance frequency is lower than 300[Hz] . • While resonance peak is low or control gain is small and when no affect from these condition is given to the motor speed. • When multiple resonance points exist.
Load	• When the motor speed variation with high frequency factor is generated due to non-linear factor such as backlash.
Command pattern	• When acceleration/deceleration is very extreme such as more than 30000 [r/min] per 1 [s] .

<Note>
Even though Pr23 is set up to other than 0, there are other cases when adaptive filter is automatically invalidated. Refer to P.235, "Invalidation of adaptive filter" of Adjustment.

Parameters Which Are Automatically Set Up.

Following parameters are automatically adjusted.

PrNo.	Title
11	1st gain of velocity loop
12	1st time constant of velocity loop integration
13	1st filter of velocity detection
14	1st time constant of torque filter
19	2nd gain of velocity loop
1A	2nd time constant of velocity loop integration
1B	2nd filter of speed detection
1C	2nd time constant of torque filter
20	Inertia ratio
2F	Adaptive filter frequency

Also following parameters are automatically set up.

PrNo.	Title	Setup value
27	Setup of instantaneous speed observer	0
30	2nd gain setup	1
31	1st mode of control switching	0
32	1st delay time of control switching	30
33	1st level of control switching	50
34	1st hysteresis of control switching	33
36	2nd mode of control switching	0

<Notes>
- When the real-time auto-gain tuning is valid, you cannot change parameters which are automatically adjusted.
- Pr31 becomes 10 at position or full closed control and when Pr21 (Setup of Real-Time Auto-Gain Tuning Mode) is 1 to 6, and becomes 0 in other cases.

Cautions

(1) After the start-up, you may experience abnormal noise and oscillation right after the first Servo-ON, or when you increase the setup of Pr22 (Selection of machine stiffness at real-time auto-gain tuning), until load inertia is identified (estimated) or adaptive filter is stabilized, however, these are not failures as long as they disappear immediately. If they persist over 3 reciprocating operations, take the following measures in possible order.
   1) Write the parameters which have given the normal operation into EEPROM.
   2) Lower the setup of Pr22 (Selection of machine stiffness at real-time auto-gain tuning).
   3) Set up both Pr21 (Setup of real-time auto-gain tuning) and Pr23 (Setup of adaptive filter mode) to 0, then set up other value than 0. (Reset of inertia estimation and adaptive action)
   4) Invalidate the adaptive filter by setting up Pr23 (Setup of adaptive filter mode setup) to 0, and set up notch filter manually.
(2) When abnormal noise and oscillation occur, Pr20 (Inertia ratio) or Pr2F (Adaptive filter frequency) might have changed to extreme values. Take the same measures as the above in these cases.
(3) Among the results of real-time auto-gain tuning, Pr20 (Inertia ratio) and Pr2F (Adaptive filter frequency) will be written to EEPROM every 30 minutes. When you turn on the power again, auto-gain tuning will be executed using the latest data as initial values.
(4) When you validate the real-time auto-gain tuning, Pr27 (Setup of instantaneous speed observer) will be invalidated automatically.
(5) The adaptive filter is normally invalidated at torque control, however, when you select torque control while you set up Pr02 (Control mode setup) to 4 and 5, the adaptive filter frequency before mode switching will be held.
(6) During the trial run and frequency characteristics measurement of "PANATERM®", the load inertia estimation will be invalidated.

Parameter Setup

Parameters for Functional Selection

Standard default : < >

<table>
<tr><th>PrNo.</th><th>Title</th><th>Setup range</th><th>Function/Content</th></tr>
<tr><td>00
*</td><td>Address</td><td>0 to 15
<1></td><td>In the communication with the host via RS232/485 for multi-axes application, it is necessary to identify which axis the host is communicating. Use this parameter to confirm the address of the axis in numbers.
• The address is determined by the setup value of rotary switch (0 to F) of the front panel at power-on.
• This value becomes the axis number at serial communication.
• The setup value of this parameter has no effect to the servo action.
• You cannot change the setup of Pr00 with other means than rotary switch.
 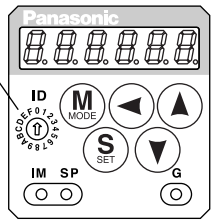 </td></tr>
<tr><td>01
*</td><td>LED initial status</td><td>0 to 17
<1></td><td>You can select the type of data to be displayed on the front panel LED (7 segment) at the initial status after power-on.
 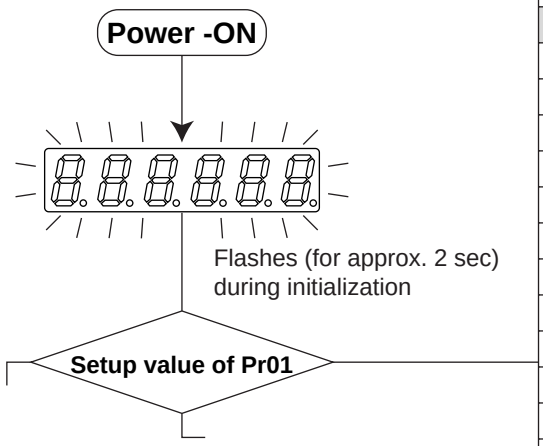
For details of display, refer to P.51 "Setup of Parameter and Mode" of Preparation.
<table><tr><th>Setup value</th><th>Content</th></tr><tr><td>0</td><td>Positional deviation</td></tr><tr><td><1></td><td>Motor rotational speed</td></tr><tr><td>2</td><td>Torque output</td></tr><tr><td>3</td><td>Control mode</td></tr><tr><td>4</td><td>I/O signal status</td></tr><tr><td>5</td><td>Error factor/history</td></tr><tr><td>6</td><td>Software version</td></tr><tr><td>7</td><td>Alarm</td></tr><tr><td>8</td><td>Regenerative load factor</td></tr><tr><td>9</td><td>Over-load factor</td></tr><tr><td>10</td><td>Inertia ratio</td></tr><tr><td>11</td><td>Sum of feedback pulses</td></tr><tr><td>12</td><td>Sum of command pulses</td></tr><tr><td>13</td><td>External scale deviation</td></tr><tr><td>14</td><td>Sum of external scale feedback pulses</td></tr><tr><td>15</td><td>Motor automatic recognizing function</td></tr><tr><td>16</td><td>Analog input value</td></tr><tr><td>17</td><td>Factor of "No-Motor Running"</td></tr></table></td></tr>
<tr><td>02
*</td><td>Setup of control mode</td><td>0 to 6
<1></td><td>You can set up the control mode to be used.
<table><tr><th rowspan="2">Setup value</th><th colspan="2">Control mode</th></tr><tr><th>1st mode</th><th>2nd mode</th></tr><tr><td>0</td><td>Position</td><td>–</td></tr><tr><td><1></td><td>Velocity</td><td>–</td></tr><tr><td>2</td><td>Torque</td><td>–</td></tr><tr><td>3 **1</td><td>Position</td><td>Velocity</td></tr><tr><td>4 **1</td><td>Position</td><td>Torque</td></tr><tr><td>5 **1</td><td>Velocity</td><td>Torque</td></tr><tr><td>6</td><td>Full-closed</td><td>–</td></tr></table>
**1) When you set up the combination mode of 3, 4 or 5, you can select either the 1st or the 2nd with control mode switching input (C-MODE).
When C-MODE is open, the 1st mode will be selected.
When C-MODE is shorted, the 2nd mode will be selected.
Don't enter commands 10ms before/after switching.
 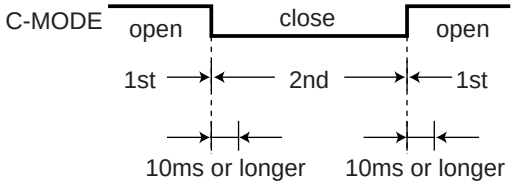 </td></tr>
</table>

Standard default : < >

<table>
<tr><th>PrNo.</th><th>Title</th><th>Setup range</th><th>Function/Content</th></tr>
<tr><td>03</td><td>Selection of torque limit</td><td>0 to 3
<1></td><td>You can set up the torque limiting method for CCW/CW direction.
<table>
<tr><th>Setup value</th><th>CCW</th><th>CW</th></tr>
<tr><td>0</td><td>X5 CCWTL : Pin-16</td><td>X5 CWTL : Pin-18</td></tr>
<tr><td><1></td><td colspan="2">Pr5E is a limit value for both CCW and CW direction</td></tr>
<tr><td>2</td><td>Set with Pr5E</td><td>Set with Pr5F</td></tr>
<tr><td>3</td><td colspan="2">When GAIN/TL-SEL input is open, set with Pr5E
When GAIN/TL-SEL input is shorted, set with Pr5F</td></tr>
</table>
When the setup value is 0, CCWTL and CWTL will be limited by Pr5E (1st torque limit setup). At the torque control, Pr5E becomes the limiting value for CCW/CW direction regardless of the setup of this parameter.</td></tr>
<tr><td>04
*</td><td>Setup of over-travel inhibit input</td><td>0 to 2
<1></td><td>In linear drive application, you can use this over-travel inhibiting function to inhibit the motor to run to the direction specified by limit switches which are installed at both ends of the axis, so that you can prevent the work load from damaging the machine due to the over-travel. With this input, you can set up the action of over-travel inhibit input.
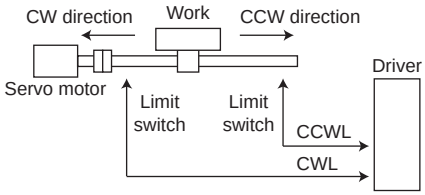

<table>
<tr><th>Setup value</th><th>CCWL/CWL input</th><th colspan="2">Input</th><th>Action</th></tr>
<tr><td rowspan="4">0</td><td rowspan="4">Valid</td><td rowspan="2">CCWL
(CN X5,Pin-9)</td><td>Close</td><td>Normal status while CCW-side limit switch is not activated.</td></tr>
<tr><td>Open</td><td>Inhibits CCW direction, permits CW direction.</td></tr>
<tr><td rowspan="2">CWL
(CN X5,Pin-9)</td><td>Close</td><td>Normal status while CW-side limit switch is not activated.</td></tr>
<tr><td>Open</td><td>Inhibits CW direction, CCW direction permitted.</td></tr>
<tr><td><1></td><td>Invalid</td><td colspan="3">Both CCWL and CWL inputs will be ignored, and over-travel inhibit function will be invalidated.</td></tr>
<tr><td>2</td><td>Valid</td><td colspan="3">Err38 (Over-travel inhibit input protection) is triggered when either one of the connection of CW or CCW inhibit input to COM– become open.</td></tr>
</table>
<Cautions>
1. When Pr04 is set to 0 and over-travel inhibit input is entered, the motor decelerates and stops according to the preset sequence with Pr66 (Sequence at over-travel inhibition). For details, refer to the explanation of Pr66.
2. When both of CCWL and CWL inputs are opened while Pr04 is set to 0, the driver trips with Err38 (Overtravel inhibit input error) judging that this is an error.
3. When you turn off the limit switch on upper side of the work at vertical axis application, the work may repeat up/down movement because of the loosing of upward torque. In this case, set up Pr66 to 2, or limit with the host controller instead of using this function.</td></tr>
</table>

<Notes>

• For parameters which No. have a suffix of "*", changed contents will be validated when you turn on the control power.

Parameter Setup

Standard default : < >

<table>
<tr><th>PrNo.</th><th>Title</th><th>Setup range</th><th>Function/Content</th></tr>
<tr><td>05</td><td>Speed setup, Internal/External switching</td><td>0 to 3
<0></td><td>This driver is equipped with internal speed setup function so that you can control the speed with contact inputs only.
<table>
<tr><th>Setup value</th><th>Speed setup method</th></tr>
<tr><td><0></td><td>External speed command (SPR:CN X5, Pin-14)</td></tr>
<tr><td>1</td><td>Internal speed command 1st to 4th speed (Pr53 to Pr56)</td></tr>
<tr><td>2</td><td>Internal speed command 1st to 3rd speed (Pr53-Pr55), External speed command (SPR)</td></tr>
<tr><td>3</td><td>Internal speed command 1st to 8th speed (Pr53 to Pr56, Pr74 to Pr77)</td></tr>
</table>
• You can select a speed command at velocity control.
• When the setup value is 1 or 2, switch 4 kinds of internal speed command with 2 kinds of contact input.
(1) INH (CN X5, Pin-33) :
Selection 1 input of internal command speed
(2) INH (CN X5, Pin-30) :
Selection 2 input of internal command speed
DIV input is ignored.
• When the setup value is 3, switch 8 kinds of internal speed command with 3 kinds of contact input.
(1) INH (CN X5, Pin-33) :
Selection 1 input of internal command speed
(2) INH (CN X5, Pin-30) :
Selection 2 input of internal command speed
(3) INH (CN X5, Pin-28) :
Selection 3 input of internal command speed
• Selection of internal speed
<table>
<tr><th colspan="3">Connector Pin No. of X5</th><th colspan="4">Pr05, Internal/external switching of speed setup</th></tr>
<tr><th>Pin-33
INTSPD1(INH)</th><th>Pin-30
INTSPD2(CL)</th><th>Pin-28
INTSPD3(DIV)</th><th>0</th><th>1</th><th>2</th><th>3</th></tr>
<tr><td>open</td><td>open</td><td>open</td><td>Analog speed command (CN X5, Pin-14)</td><td>1st speed of speed setup (Pr53)</td><td>1st speed of speed setup (Pr53)</td><td>1st speed of speed setup (Pr53)</td></tr>
<tr><td>short</td><td>open</td><td>open</td><td>Analog speed command (CN X5, Pin-14)</td><td>2nd speed of speed setup (Pr54)</td><td>2nd speed of speed setup (Pr54)</td><td>2nd speed of speed setup (Pr54)</td></tr>
<tr><td>open</td><td>short</td><td>open</td><td>Analog speed command (CN X5, Pin-14)</td><td>3rd speed of speed setup (Pr55)</td><td>3rd speed of speed setup (Pr55)</td><td>3rd speed of speed setup (Pr55)</td></tr>
<tr><td>short</td><td>short</td><td>open</td><td>Analog speed command (CN X5, Pin-14)</td><td>4th speed of speed setup (Pr56)</td><td>Analog speed command (CN X5, Pin-14)</td><td>4th speed of speed setup (Pr56)</td></tr>
<tr><td>open</td><td>open</td><td>short</td><td>Analog speed command (CN X5, Pin-14)</td><td>1st speed of speed setup (Pr53)</td><td>1st speed of speed setup (Pr53)</td><td>5th speed of speed setup (Pr74)</td></tr>
<tr><td>short</td><td>open</td><td>short</td><td>Analog speed command (CN X5, Pin-14)</td><td>2nd speed of speed setup (Pr54)</td><td>2nd speed of speed setup (Pr54)</td><td>6th speed of speed setup (P75)</td></tr>
<tr><td>open</td><td>short</td><td>short</td><td>Analog speed command (CN X5, Pin-14)</td><td>3rd speed of speed setup (Pr55)</td><td>3rd speed of speed setup (Pr55)</td><td>7th speed of speed setup (Pr76)</td></tr>
<tr><td>short</td><td>short</td><td>short</td><td>Analog speed command (CN X5, Pin-14)</td><td>4th speed of speed setup (Pr56)</td><td>Analog speed command (CN X5, Pin-14)</td><td>8th speed of speed setup (Pr77)</td></tr>
</table>
• Example of 4-speed run with internal speed command.
In addition to CL/INH inputs, use the speed zero clamp input (ZEROSPD) and Servo-ON input (SRV-ON) to control the motor stop and start.
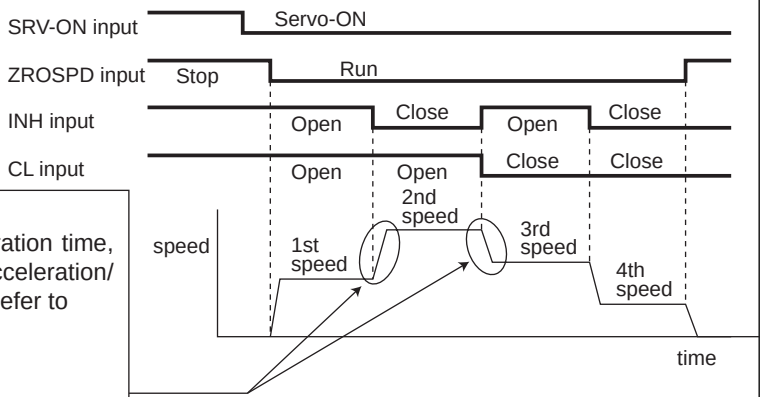

<Caution>
You can individually set up acceleration time, deceleration time, and sigmoid acceleration/ deceleration time with parameter. Refer to
Pr58 : Acceleration time setup
Pr59 : Deceleration time setup
Pr5A : Sigmoid acceleration/ deceleration time setup in this Chapter.</td></tr>
<tr><td>06</td><td>Selection of ZEROSPD input</td><td>0 to 2
<0></td><td>You can set up the function of the speed zero clamp input (ZEROSPD : CN X5, Pin-26)
<table>
<tr><th>Setup value</th><th>Function of ZEROSPD (Pin-26)</th></tr>
<tr><td><0></td><td>ZEROSPD input is ignored and the driver judge that it Is not in speed zero clamp status.</td></tr>
<tr><td>1</td><td>ZEROSPD input becomes valid. Speed command is taken as 0 by opening the connection to COM–.</td></tr>
<tr><td>2</td><td>Becomes speed command sign. You can set command direction to CCW by opening the connection to COM–, and CW by closing.</td></tr>
</table>
</td></tr>
</table>

Standard default : < >

<table>
<tr><th>PrNo.</th><th>Title</th><th>Setup range</th><th>Function/Content</th></tr>
<tr><td>07</td><td>Selection of speed monitor (SP)</td><td>0 to 9
<3></td><td>You can set up the content of analog speed monitor signal output (SP : CN X5, Pin43) and the relation between the output voltage level and the speed.
<table>
<tr><th>Setup value</th><th>Signal of SP</th><th>Relation between the output voltage level and the speed</th></tr>
<tr><td>0</td><td rowspan="5">Motor actual speed</td><td>6V / 47 r/min</td></tr>
<tr><td>1</td><td>6V / 188 r/min</td></tr>
<tr><td>2</td><td>6V / 750 r/min</td></tr>
<tr><td><3></td><td>6V / 3000 r/min</td></tr>
<tr><td>4</td><td>1.5V / 3000 r/min</td></tr>
<tr><td>5</td><td rowspan="5">Command speed</td><td>6V / 47 r/min</td></tr>
<tr><td>6</td><td>6V / 188 r/min</td></tr>
<tr><td>7</td><td>6V / 750 r/min</td></tr>
<tr><td>8</td><td>6V / 3000 r/min</td></tr>
<tr><td>9</td><td>1.5V / 3000 r/min</td></tr>
</table></td></tr>
<tr><td>08</td><td>Selection of torque monitor (IM)</td><td>0 to 12
<0></td><td>You can set up the content of the analog torque monitor of the signal output (IM : CN X5, Pin-42), and the relation between the output voltage level and torque or deviation pulse counts.
<table>
<tr><th>Setup value</th><th>Signal of IM</th><th>Relation between the output voltage level and torque or deviation pulse counts</th></tr>
<tr><td><0></td><td>Torque command</td><td>3V/rated (100%) torque</td></tr>
<tr><td>1</td><td rowspan="5">Position deviation</td><td>3V / 31Pulse</td></tr>
<tr><td>2</td><td>3V / 125Pulse</td></tr>
<tr><td>3</td><td>3V / 500Pulse</td></tr>
<tr><td>4</td><td>3V / 2000Pulse</td></tr>
<tr><td>5</td><td>3V / 8000Pulse</td></tr>
<tr><td>6</td><td rowspan="5">Full-closed deviation</td><td>3V / 31Pulse</td></tr>
<tr><td>7</td><td>3V / 125Pulse</td></tr>
<tr><td>8</td><td>3V / 500Pulse</td></tr>
<tr><td>9</td><td>3V / 2000Pulse</td></tr>
<tr><td>10</td><td>3V / 8000Pulse</td></tr>
<tr><td>11</td><td rowspan="2">Torque command</td><td>3V / 200% torque</td></tr>
<tr><td>12</td><td>3V / 400% torque</td></tr>
</table></td></tr>
<tr><td>09</td><td>Selection of TLC output</td><td>0 to 8
<0></td><td>You can assign the function of the torque in-limit output (TLC : CN X5 Pin-40).
<table>
<tr><th>Setup value</th><th>Function</th><th>Note</th></tr>
<tr><td><0></td><td>Torque in-limit output</td><td rowspan="9">For details of function of each output of the left, refer to the table of P135, "Selection of TCL and ZSP outputs".</td></tr>
<tr><td>1</td><td>Zero speed detection output</td></tr>
<tr><td>2</td><td>Alarm output of either one of Over-regeneration /Over-load/Absolute battery/Fan lock/External scale</td></tr>
<tr><td>3</td><td>Over-regeneration alarm trigger output</td></tr>
<tr><td>4</td><td>Overload alarm output</td></tr>
<tr><td>5</td><td>Absolute battery alarm output</td></tr>
<tr><td>6</td><td>Fan lock alarm output</td></tr>
<tr><td>7</td><td>External scale alarm output</td></tr>
<tr><td>8</td><td>In-speed (Speed coincidence) output</td></tr>
</table></td></tr>
<tr><td>0A</td><td>Selection of ZSP output</td><td>0 to 8
<1></td><td>You can assign the function of the zero speed detection output (ZSP: CN X5 Pin-12).
<table>
<tr><th>Setup value</th><th>Function</th><th>Note</th></tr>
<tr><td>0</td><td>Torque in-limit output</td><td rowspan="9">For details of function of each output of the left, refer to the table of P.135, "Selection of TCL and ZSP outputs".</td></tr>
<tr><td><1></td><td>Zero speed detection output</td></tr>
<tr><td>2</td><td>Alarm output of either one of Over-regeneration /Over-load/Absolute battery/Fan lock/External scale</td></tr>
<tr><td>3</td><td>Over-regeneration alarm trigger output</td></tr>
<tr><td>4</td><td>Overload alarm output</td></tr>
<tr><td>5</td><td>Absolute battery alarm output</td></tr>
<tr><td>6</td><td>Fan lock alarm output</td></tr>
<tr><td>7</td><td>External scale alarm output</td></tr>
<tr><td>8</td><td>In-speed (Speed coincidence) output</td></tr>
</table></td></tr>
</table>

Standard default : < >

<table>
<tr><th>PrNo.</th><th>Title</th><th>Setup range</th><th>Function/Content</th></tr>
<tr><td>0B
*</td><td>Setup of absolute encoder</td><td>0 to 2
<1></td><td>You can set up the using method of 17-bit absolute encoder.
<table>
<tr><th>Setup value</th><th>Content</th></tr>
<tr><td>0</td><td>Use as an absolute encoder.</td></tr>
<tr><td><1></td><td>Use as an incremental encoder.</td></tr>
<tr><td>2</td><td>Use as an absolute encoder, but ignore the multi-turn counter over.</td></tr>
</table>
<Caution>
This parameter will be invalidated when 5-wire, 2500P/r incremental encoder is used.</td></tr>
<tr><td>0C
*</td><td>Baud rate setup of RS232 communication</td><td>0 to 5
<2></td><td>You can set up the communication speed of RS232. • Error of baud rate is ±0.5%.
<table>
<tr><th>Setup value</th><th>Baud rate</th><th>Setup value</th><th>Baud rate</th></tr>
<tr><td>0</td><td>2400bps</td><td>3</td><td>19200bps</td></tr>
<tr><td>1</td><td>4800bps</td><td>4</td><td>38400bps</td></tr>
<tr><td><2></td><td>9600bps</td><td>5</td><td>57600bps</td></tr>
</table></td></tr>
<tr><td>0D
*</td><td>Baud rate setup of RS485 communication</td><td>0 to 5
<2></td><td>You can set up the communication speed of RS485. • Error of baud rate is ±0.5%.
<table>
<tr><th>Setup value</th><th>Baud rate</th><th>Setup value</th><th>Baud rate</th></tr>
<tr><td>0</td><td>2400bps</td><td>3</td><td>19200bps</td></tr>
<tr><td>1</td><td>4800bps</td><td>4</td><td>38400bps</td></tr>
<tr><td><2></td><td>9600bps</td><td>5</td><td>57600bps</td></tr>
</table></td></tr>
<tr><td>0E
*</td><td>Setup of front panel lock</td><td>0 to 1
<0></td><td>You can limit the operation of the front panel to the monitor mode only.
You can prevent such a misoperation as unexpected parameter change.
<table>
<tr><th>Setup value</th><th>Content</th></tr>
<tr><td><0></td><td>Valid to all</td></tr>
<tr><td>1</td><td>Monitor mode only</td></tr>
</table>
<Note>
You can still change parameters via communication even though this setup is 1.
To return this parameter to 0, use the console or the "PANATERM®".</td></tr>
</table>

Parameters for Adjustment of Time Constants of Gains and Filters

Standard default : < >

PrNo.	Title	Setup range	Unit	Function/Content
11	1st gain of velocity loop	1 to 3500 A to C-frame:<35>* D to F-frame:<18>*	Hz	You can determine the response of the velocity loop. In order to increase the response of overall servo system by setting high position loop gain, you need higher setup of this velocity loop gain as well. However, too high setup may cause oscillation. **<Caution>** When the inertia ratio of Pr20 is set correctly, the setup unit of Pr11 becomes (Hz).
12	1st time constant of velocity loop integration	1 to 1000 A to C-frame:<16>* D to F-frame:<31>*	ms	You can set up the integration time constant of velocity loop. Smaller the setup, faster you can dog-in deviation at stall to 0. The integration will be maintained by setting to "999". The integration effect will be lost by setting to "1000".
13	1st filter of speed detection	0 to 5 <0>*	–	You can set up the time constant of the low pass filter (LPF) after the speed detection, in 6 steps. Higher the setup, larger the time constant you can obtain so that you can decrease the motor noise, however, response becomes slow. Use with a default value of 0 in normal operation.
14	1st time constant of torque filter	0 to 2500 A to C-frame:<65>* D to F-frame:<126>*	0.01ms	You can set up the time constant of the 1st delay filter inserted in the torque command portion. You might expect suppression of oscillation caused by distortion resonance.

Standard default : < >

PrNo.	Title	Setup range	Unit	Function/Content
19	2nd gain of velocity loop	1 to 3500 A to C-frame:<35>* D to F-frame:<18>*	Hz	Position loop, velocity loop, speed detection filter and torque command filter have their 2 pairs of gain or time constant (1st and 2nd). For details of switching the 1st and the 2nd gain or the time constant, refer to P.226, "Adjustment". The function and the content of each parameter is as same as that of the 1st gain and time constant.
1A	2nd time constant of velocity loop integration	1 to 1000 <1000>*	ms	
1B	2nd filter of velocity detection	0 to 5 <0>*	–	
1C	2nd time constant of torque filter	0 to 2500 A to C-frame:<65>* D to F-frame:<126>*	0.01ms	
1D	1st notch frequency	100 to 1500 <1500>	Hz	You can set up the frequency of the 1st resonance suppressing notch filter. The notch filter function will be invalidated by setting up this parameter to "1500".
1E	1st notch width selection	0 to 4 <2>	–	You can set up the notch filter width of the 1st resonance suppressing filter in 5 steps. Higher the setup, larger the notch width you can obtain. Use with default setup in normal operation.

Parameters for Auto-Gain Tuning

Standard default : < >

PrNo.	Title	Setup range	Unit	Function/Content
20	Inertia ratio	0 to 10000 <250>*	%	You can set up the ratio of the load inertia against the rotor (of the motor) inertia. Pr20= (load inertia/rotor inertia) X 100 [%] When you execute the normal auto-gain tuning, the load inertial will be automatically estimated after the preset action, and this result will be reflected in this parameter. The inertia ratio will be estimated at all time while the real-time auto-gain tuning is valid, and its result will be saved to EEPROM every 30 min. **<Caution>** If the inertia ratio is correctly set, the setup unit of Pr11 and Pr19 becomes (Hz). When the inertia ratio of Pr20 is larger than the actual, the setup unit of the velocity loop gain becomes larger, and when the inertia ratio of Pr20 is smaller than the actual, the setup unit of the velocity loop gain becomes smaller.
21	Setup of real-time auto-gain tuning	0 to 7 <1>	–	You can set up the action mode of the real-time auto-gain tuning. With higher setup such as 3, the driver respond quickly to the change of the inertia during operation, however it might cause an unstable operation. Use 1for normal operation.

Setup value	Real-time auto-gain tuning	Varying degree of load inertia in motion
0	Invalid	–
<1>, 4, 7	Normal mode	Little change
2, 5		Gradual change
3, 6		Rapid change

<Notes>

- For parameters which No. have a suffix of "*", changed contents will be validated when you turn on the control power.
- Parameters which default values have a suffix of "*" will be automatically set up during real time auto-gain tuning. When you change manually, invalidate the real-time auto-gain tuning first then set, referring to P.239, "Release of Automatic Gain Adjusting Function" of Adjustment.

Parameter Setup

Standard default : < >

<table>
<tr><th>PrNo.</th><th>Title</th><th>Setup range</th><th>Unit</th><th>Function/Content</th></tr>
<tr><td>22</td><td>Selection of machine stiffness at real-time auto-gain tuning</td><td>0 to 15
A to C-frame:
<4>
D to F-frame:
<1></td><td>–</td><td>You can set up the machine stiffness in 16 steps while the real-time auto-gain tuning is valid.
low←machine stiffness→high
low← servo gain →high
Pr22 | 0, 1- - - - - - - - - - - - 14, 15
low← response →high
<Caution>
When you change the setup value rapidly, the gain changes rapidly as well, and this may give impact to the machine. Increase the setup gradually watching the movement of the machine.</td></tr>
<tr><td>23</td><td>Setup of adaptive filter mode</td><td>0 to 2
<1></td><td>–</td><td>You can set up the action of the adaptive filter.
0 : Invalid
1 : Valid
2 : Hold (holds the adaptive filter frequency when this setup is changed to 2.)
<Caution>
When you set up the adaptive filter to invalid, the adaptive filter frequency of Pr2F will be reset to 0. The adaptive filter is always invalid at the torque control mode.</td></tr>
<tr><td>25</td><td>Setup of an action at normal mode auto-gain tuning</td><td>0 to 7
<0></td><td>–</td><td>You can set up the action pattern at the normal mode auto-gain tuning.
<table>
<tr><th>Setup value</th><th>Number of revolution</th><th>Rotational direction</th></tr>
<tr><td><0></td><td rowspan="4">2 [revolution]</td><td>CCW → CW</td></tr>
<tr><td>1</td><td>CW → CCW</td></tr>
<tr><td>2</td><td>CCW → CCW</td></tr>
<tr><td>3</td><td>CW → CW</td></tr>
<tr><td>4</td><td rowspan="4">1 [revolution]</td><td>CCW → CW</td></tr>
<tr><td>5</td><td>CW → CCW</td></tr>
<tr><td>6</td><td>CCW → CCW</td></tr>
<tr><td>7</td><td>CW → CW</td></tr>
</table>
e.g.) When the setup is 0, the motor turns 2 revolutions to CCW and 2 revolutions to CW.</td></tr>
<tr><td>27</td><td>Setup of instantaneous speed observer</td><td>0 to 1
<0>*</td><td>–</td><td>With a high stiffness machine, you can achieve both high response and reduction of vibration at stall, by using this instantaneous speed observer.
<table>
<tr><th>Setup value</th><th>Instantaneous speed observer setup</th></tr>
<tr><td><0>*</td><td>Invalid</td></tr>
<tr><td>1</td><td>Valid</td></tr>
</table>
You need to set up the inertia ratio of Pr20 correctly to use this function.
If you set up Pr21, real-time auto-gain tuning mode setup, to other than 0 (valid), Pr27 becomes 0 (invalid)</td></tr>
<tr><td>28</td><td>2nd notch frequency</td><td>100 to 1500
<1500></td><td>Hz</td><td>You can set up the 2nd notch width of the resonance suppressing filter in 5 steps. The notch filter function is invalidated by setting up this parameter to "1500".</td></tr>
<tr><td>29</td><td>Selection of 2nd notch width</td><td>0 to 4
<2></td><td>–</td><td>You can set up the notch width of 2nd resonance suppressing filter in 5 steps. Higher the setup, larger the notch width you can obtain.
Use with default setup in normal operation.</td></tr>
<tr><td>2A</td><td>Selection of 2nd notch depth</td><td>0 to 99
<0></td><td>–</td><td>You can set up the 2nd notch depth of the resonance suppressing filter. Higher the setup, shallower the notch depth and smaller the phase delay you can obtain.</td></tr>
</table>

<Notes>

- Parameters which default values have a suffix of "*" will be automatically set up during real time auto-gain tuning. When you change manually, invalidate the real-time auto-gain tuning first then set, referring to P.239, "Release of Automatic Gain Adjusting Function" of Adjustment.

Standard default : < >

PrNo.	Title	Setup range	Unit	Function/Content
2F	Adaptive filter frequency	0 to 64 <0>	–	Displays the table No. corresponding to the adaptive filter frequency. (Refer to P.234 of Adjustment.) This parameter will be automatically set and cannot be changed while the adaptive filter is valid. (when Pr23 (Setup of adaptive filter mode) is other than 0.) 0 to 4 Filter is invalid. 5 to 48 Filter is valid. 49 to 64 Filter validity changes according to Pr22. This parameter will be saved to EEPROM every 30 minutes while the adaptive filter is valid, and when the adaptive filter is valid at the next power-on, the adaptive action starts taking the saved data in EEPROM as an initial value. **<Caution>** When you need to clear this parameter to reset the adaptive action while the action is not normal, invalidate the adaptive filter (Pr23, "Setup of adaptive filter mode" to 0) once, then validate again. Refer to P.239, "Release of Automatic Gain Adjusting Function" of Adjustment as well.

Parameters for Adjustment (2nd Gain Switching Function)

Standard default : < >

PrNo.	Title	Setup range	Unit	Function/Content
30	Setup of 2nd gain	0 to 1 <1>*	–	You can select the PI/P action switching of the velocity control or 1st/2nd gain switching. Setup value: 0 – 1st gain (PI/P switching enabled) *1; <1>* – 1st/2nd gain switching enabled *2 *1 Switch the PI/P action with the gain switching input (GAIN CN X5, Pin-27). PI is fixed when Pr03 (Torque limit selection) is 3. GAIN input: Open with COM– → PI action; Connect to COM– → P action *2 For switching condition of the 1st and the 2nd, refer to P.243, "Gain Switching Function" of Adjustment.
31	1st mode of control switching	0 to 10 <0>*	–	You can select the switching condition of 1st gain and 2nd gain while Pr30 is set to 1. Setup value <0>*, 6to 10 – Fixed to the 1st gain. 1 – Fixed to the 2nd gain. 2 *1 – 2nd gain selection when the gain switching input is turned on. (Pr30 setup must be 1.) 3 *2 – 2nd gain selection when the toque command variation is larger than the setups of Pr33 (1st level of control switching) and Pr34 (1st hysteresis of control switching). 4 *2 – Fixed to the 1st gain. 5 *2 – 2nd gain selection when the command speed is larger than the setups of Pr33 (1st level of control switching) and Pr34 (1st hysteresis at control switching). *1 Fixed to the 1st gain regardless of GAIN input, when Pr31 is set to 2 and Pr03 (Torque limit selection) is set to 3. *2 For the switching level and the timing, refer to P.243, "Gain Switching Function" of Adjustment.

Standard default : < >

<table>
<tr><th>PrNo.</th><th>Title</th><th>Setup range</th><th>Unit</th><th>Function/Content</th></tr>
<tr><td>32</td><td>1st delay time of control switching</td><td>0 to 10000 <30>*</td><td>x 166μs</td><td>You can set up the delay time when returning from the 2nd to the 1st gain, while Pr31 is set to 3 or 5 to 10.</td></tr>
<tr><td>33</td><td>1st level of control switching</td><td>0 to 20000 <50>*</td><td>–</td><td>You can set up the switching (judging) level of the 1st and the 2nd gains, while Pr31 is set to 3, 5, 6. 9 and 10.
Unit varies depending on the setup of Pr31 (1st mode of control switching)</td></tr>
<tr><td>34</td><td>1st hysteresis of control switching</td><td>0 to 20000 <33>*</td><td>–</td><td>You can set up hysteresis width to be implemented above/below the judging level which is set up with Pr33. Unit varies depending on the setup of Pr31 (1st control switching mode). Definitions of Pr32 (Delay), Pr33 (Level) and Pr34 (Hysteresis) are explained in the fig. below.
 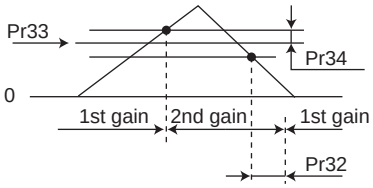

<Caution>
The setup of Pr33 (Level) and Pr34 (Hysteresis) are valid as absolute values (positive/negative).</td></tr>
<tr><td>36</td><td>2nd mode of control switching</td><td>0 to 5 <0>*</td><td>–</td><td>You can select the switching condition of the 1st and 2nd gain while Pr30 is set to 1 and when the 2nd control mode is velocity control.
<table>
<tr><th>Setup value</th><th>Gain switching condition</th></tr>
<tr><td><0>*</td><td>Fixed to the 1st gain</td></tr>
<tr><td>1</td><td>Fixed to the 2nd gain</td></tr>
<tr><td>2 *1</td><td>2nd gain selection when gain switching input is turned on (GAIN : CN X5, Pin-27) (Pr30 setup must be 1.)</td></tr>
<tr><td>3 *2</td><td>2nd gain selection when the torque command variation is larger.</td></tr>
<tr><td>4 *2</td><td>2nd gain selection when the speed command variation (acceleration) is larger.</td></tr>
<tr><td>5 *2</td><td>2nd gain selection when the command speed is larger.</td></tr>
</table>
*1 Fixed to the 1st gain regardless of the GAIN input, when Pr31 is set to 2 and Pr03 (Torque limit selection) is set to 3.
*2 For the switching level and timing, refer to P.244, "Setup of Gain Switching Condition" of Adjustment.</td></tr>
<tr><td>37</td><td>2nd delay time of control switching</td><td>0 to 10000 <0></td><td>x 166μs</td><td>You can set up the delay time when returning from 2nd to 1st gain, while Pr36 is set to 3 to 5.</td></tr>
<tr><td>38</td><td>2nd level of control switching</td><td>0 to 20000 <0></td><td>–</td><td>You can set up the switching (judging) level of the 1st and the 2nd gains, while Pr36 is set to 3 to 5
Unit varies depending on the setup of Pr36 (2nd mode of control switching).</td></tr>
<tr><td>39</td><td>2nd hysteresis of control switching</td><td>0 to 20000 <0></td><td>–</td><td>You can set up the hysteresis width to be implemented above/below the judging level which is set up with Pr38.
Unit varies depending on the setup of Pr36 (2nd mode of control switching).Definition of Pr37 (Delay), Pr38 (Level) and Pr39 (Hysteresis) are explained in the fig. below.
 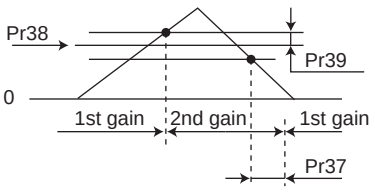

<Caution>
Setup of Pr38 (Level) and Pr39 (Hysteresis) are valid as absolute value (positive/negative).</td></tr>
<tr><td>3D</td><td>JOG speed setup</td><td>0 to 500 <300></td><td>r/min</td><td>You can setup the JOG speed.
Refer to P.75, "Trial Run"of Preparation.</td></tr>
</table>

<Notes>

- Parameters which default values have a suffix of "*" will be automatically set up during real time auto-gain tuning. When you change manually, invalidate the real-time auto-gain tuning first then set, referring to P.239, "Release of Automatic Gain Adjusting Function" of Adjustment.

Parameters for Position Control

Standard default : < >

<table>
<tr><th>PrNo.</th><th>Title</th><th>Setup range</th><th>Function/Content</th></tr>
<tr><td>44
*</td><td>Numerator of pulse output division</td><td>1 to 32767
<2500></td><td rowspan="2">You can set up the pulse counts to be fed out from the pulse output (X5 0A+ : Pin-21, 0A- : Pin-22, 0B+ : Pin-48, 0B- : Pin-49).
• Pr45= <0> (Default)
You can set up the output pulse counts per one motor revolution for each OA and OB with the Pr44 setup. Therefore the pulse output resolution after quadruple can be obtained from the formula below.
The pulse output resolution per one revolution
= Pr44 (Numerator of pulse output division) X4
• Pr45≠0 :
The pulse output resolution per one revolution can be divided by any ration according to the formula below.
Pulse output resolution per one revolution $\frac{\text{Pr44 (Numerator of pulse output division)}}{\text{Pr45 (Denominator of pulse output division)}}$ x Encoder resolution
<Cautions>
• The encoder resolution is 131072 [P/r] for the 17-bit absolute encoder, and 10000 [P/r] for the 5-wire 2500P/r incremental encoder.
• The pulse output resolution per one revolution cannot be greater than the encoder resolution.
(In the above setup, the pulse output resolution equals to the encoder resolution.)
• Z-phase is fed out once per one revolution of the motor.
When the pulse output resolution obtained from the above formula is multiple of 4, Z-phase synchronizes with A-phase. In other case, the Z-phase width equals to output with the encoder resolution, and becomes narrower than A-phase, hence does not synchronize with A-phase.
when encoder resolution x $\frac{\text{Pr44}}{\text{Pr45}}$ is multiple of 4
 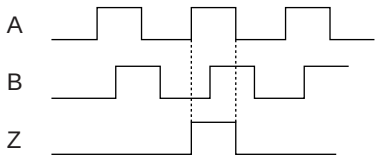

Synchronized
when encoder resolution x $\frac{\text{Pr44}}{\text{Pr45}}$ is not multiple of 4
 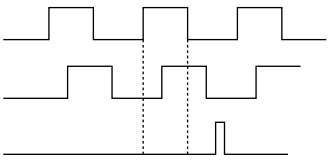

Not-synchronized</td></tr>
<tr><td>45
*</td><td>Denominator of pulse output division</td><td>0 to 32767
<0></td></tr>
</table>

<Notes>

• For parameters which No. have a suffix of "*", changed contents will be validated when you turn on the control power.

Standard default : < >

PrNo.	Title	Setup range	Function/Content
46 *	Reversal of pulse output logic	0 to 3 <0>	You can set up the B-phase logic and the output source of the pulse output (X5 OB+ : Pin-48, OB– : Pin-49). With this parameter, you can reverse the phase relation between the A-phase pulse and the B-phase pulse by reversing the B-phase logic.

Setup value	A-phase (OA)	at motor CCW rotation	at motor CW rotation
		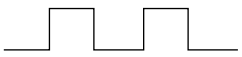	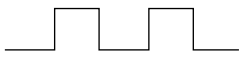
<0>, 2	B-phase(OB) non-reversal	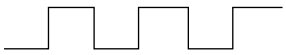	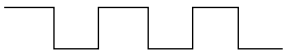
1, 3	B-phase(OB) reversal		

Pr46	B-phase logic	Output source
<0>	Non-reversal	Encoder position
1	Reversal	Encoder position
2 *1	Non-reversal	External scale position
3 *1	Reversal	External scale position

*1 The output source of Pr46= 2, 3 is valid only at full-closed control.

Parameters for Velocity and Torque Control

Standard default : < >

PrNo.	Title	Setup range	Unit	Function/Content
50	Input gain of speed command	10 to 2000 <500>	(r/min)/V	You can set up the relation between the voltage applied to the speed command input (SPR : CN X5, Pin-14) and the motor speed.

- You can set up a "slope" of the relation between the command input voltage and the motor speed, with Pr50.
- Default is set to Pr50= 500 [r/min] , hence input of 6V becomes 3000r/min.

<Cautions>

1. Do not apply more than ±10V to the speed command input (SPR).
2. When you compose a position loop outside of the driver while you use the driver in velocity control mode, the setup of Pr50 gives larger variance to the overall servo system. Pay an extra attention to oscillation caused by larger setup of Pr50.

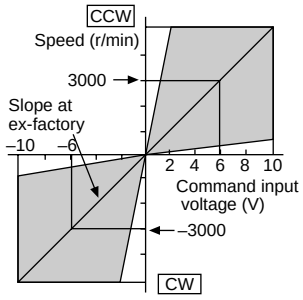

<Notes>

- For parameters which No. have a suffix of "*", changed contents will be validated when you turn on the control power.

Standard default : < >

<table>
<tr><th>PrNo.</th><th>Title</th><th>Setup range</th><th>Unit</th><th>Function/Content</th></tr>
<tr><td>51</td><td>Reversal of speed command input</td><td>0 to 1
<1></td><td>–</td><td>You can reverse the polarity of the speed command input signal (SPR:CN X5, Pin-14). Use this function when you want to change the motor rotational direction without changing the polarity of the command signal from the host.
<table><tr><th>Setup value</th><th>Motor rotating direction</th></tr><tr><td>0</td><td>CCW direction with (+) command (viewed from the motor shaft end</td></tr><tr><td><1></td><td>CW direction with (+) command (viewed from the motor shaft end</td></tr></table><Notes>
• Default of this parameter is 1, and the motor turns to CW with (+) signal, this has compatibility to existing MINAS series driver.
• When Pr06 (ZEROSPD) is set to 2, this parameter becomes invalid.
<Caution>
When you compose the servo drive system with this driver set to velocity control mode and external positioning unit, the motor might perform an abnormal action if the polarity of the speed command signal from the unit and the polarity of this parameter setup does not match.</td></tr>
<tr><td>52</td><td>Speed command offset</td><td>–2047 to 2047
<0></td><td>0.3mV</td><td>• You can make an offset adjustment of analog speed command (SPR : CN X5, Pin-14) with this parameter.
• The offset volume is 0.3mV per setup value of "1".
• There are 2 offset methods, (1) Manual adjustment and (2) Automatic adjustment.
1) Manual adjustment
• When you make an offset adjustment with the driver alone, Enter 0 V exactly to the speed command input (SPR/TRQR), (or connect to the signal ground), then set this parameter up so that the motor may not turn.
• when you compose a position loop with the host,
• Set this parameter up so that the deviation pulse may be reduced to 0 at the Servo-Lock status.
2) Automatic adjustment
• For the details of operation method at automatic offset adjustment mode, refer to P.73, "Auxiliary Function Mode" of Preparation.
• Result after the execution of the automatic offset function will be reflected in this parameter, Pr52.</td></tr>
<tr><td>53</td><td>1st speed of speed setup</td><td rowspan="4">–20000 to 20000
<0></td><td rowspan="4">r/min</td><td rowspan="8">When the internal speed setup is validated with parameter Pr05, "Switching of internal or external speed setup", you can set up 1st to 4th speed into Pr53 to 56, 5th to 8th speed into Pr74 to 77 in direct unit of [r/min] .
<Caution>
• The polarity of the setup value represents that of the internal command speed.
<table><tr><td>+</td><td>Command to CCW (viewed from the motor shaft end)</td></tr><tr><td>–</td><td>Command to CW (viewed from the motor shaft end)</td></tr></table>• The absolute value of the parameter setup is limited with Pr73 (Setup of over-speed level)</td></tr>
<tr><td>54</td><td>2nd speed of speed setup</td></tr>
<tr><td>55</td><td>3rd speed of speed setup</td></tr>
<tr><td>56</td><td>4th speed of speed setup</td></tr>
<tr><td>74</td><td>5th speed of speed setup</td><td rowspan="4">–20000 to 20000
<0></td><td rowspan="4">r/min</td></tr>
<tr><td>75</td><td>6th speed of speed setup</td></tr>
<tr><td>76</td><td>7th speed of speed setup</td></tr>
<tr><td>77</td><td>8th speed of speed setup</td></tr>
<tr><td>57</td><td>Setup of speed command filter</td><td>0 to 6400
<0></td><td>0.01ms</td><td>You can set up the time constant of the primary delay filter to the analog speed command/analog torque command/analog velocity control (SPR : CN X5, Pin-14)</td></tr>
</table>

Parameter Setup

Standard default : < >

<table>
<tr><th>PrNo.</th><th>Title</th><th>Setup range</th><th>Unit</th><th>Function/Content</th></tr>
<tr><td>58</td><td>Acceleration time setup</td><td>0 to 5000 <0></td><td>2ms/ (1000r/min)</td><td rowspan="2">You can make the velocity control while adding acceleration and deceleration command to the speed command inside of the driver. With this function, you can make a soft-start when you enter the step-speed command and when you use with the internal speed setup.
 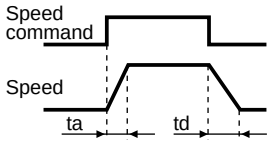

<table><tr><td>ta</td><td>Pr58 x 2ms/(1000r/min)</td></tr><tr><td>td</td><td>Pr59 x 2ms/(1000r/min)</td></tr></table>
<Caution>
Do not use these acceleration/deceleration time setup when you use the external position loop. (Set up both Pr58 and Pr59 to 0.)</td></tr>
<tr><td>59</td><td>Deceleration time setup</td><td>0 to 5000 <0></td><td>2ms/ (1000r/min)</td></tr>
<tr><td>5A</td><td>Sigmoid acceleration/ deceleration time setup</td><td>0 to 500 <0></td><td>2ms</td><td>In order to obtain a smooth operation, you can set up the quasi sigmoid acceleration/deceleration in such application as linear acceleration/ deceleration where acceleration variation is large at starting/stopping to cause a strong shock.
 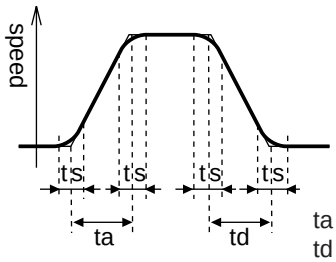

1. Set up acceleration/deceleration for basic linear portion with Pr58 and Pr59
2.Set up sigmoid time with time width centering the inflection point of linear acceleration/deceleration with Pr5A. (unit : 2ms)
ta : Pr58
td : Pr59
ts : Pr5A
Use with the setup of $\frac{ta}{2}$ > ts, ts, and $\frac{td}{2}$ > ts</td></tr>
<tr><td>5E</td><td>1st torque limit setup</td><td>0 to 500 <500> *2</td><td>%</td><td rowspan="2">You can set up the limit value of the motor output torque (Pr5E : 1st torque, Pr5F : 2nd torque). For the torque limit selection, refer to Pr03 (Torque limit selection).
This torque limit function limits the max. motor torque inside of the driver with parameter setup.
In normal operation, this driver permits approx. 3 times larger torque than the rated torque instantaneously. If this 3 times bigger torque causes any trouble to the load (machine) strength, you can use this function to limit the max. torque.
• Setup value is to be given in % against the rated torque.
• Right fig. shows example of 150% setup with Pr03=1.
• Pr5E limits the max. torque for both CCW and CW directions.
 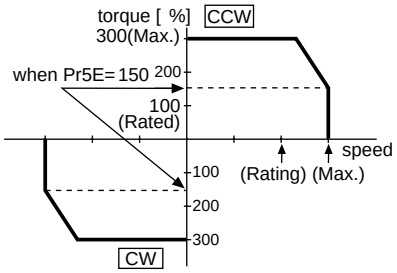

<Caution>
You cannot set up a larger value to this parameter than the default setup value of "Max. output torque setup" of System parameter (which you cannot change through operation with PANATERM® or panel). Default value varies depending on the combination of the motor and the driver. For details, refer to P.57, "Setup of Torque Limit " of Preparation.</td></tr>
<tr><td>5F</td><td>2nd torque limit setup</td><td>0 to 500 <500> *2</td><td>%</td></tr>
</table>

<Notes>

- For parameters which No. have a suffix of "*", changed contents will be validated when you turn on the control power.
- For parameters which default. has a suffix of "*2", value varies depending on the combination of the driver and the motor.

Parameters for Sequence

Standard default : < >

PrNo.	Title	Setup range	Unit	Function/Content
61	Zero-speed	10 to 20000 <50>	r/min	You can set up the timing to feed out the zero-speed detection output signal (ZSP : CN X5, Pin-12 or TCL : CN X5, Pin-40) in rotational speed [r/min] . The zero-speed detection signal (ZSP) will be fed out when the motor speed falls below the setup of this parameter, Pr61. In-speed (Speed coincidence) signal (V-COIN) will be fed out when the difference between the speed command and the motor speed falls below the setup of this parameter, Pr61. • The setup of P61 is valid for both CCW and CW direction regardless of the motor rotating direction. • There is hysteresis of 10 [r/min] . 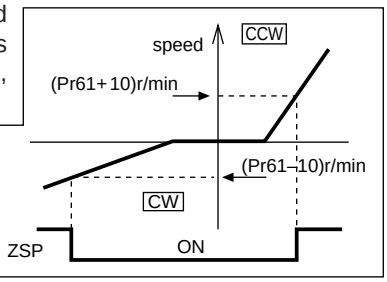
62	At-speed (Speed arrival)	10 to 20000 <50>	r/min	You can set up the timing to feed out the At-speed signal (COIN+ : CN X5, Pin-39, COIN- : CN X5, Pin-38) At-speed (Speed arrival) (COIN) will be fed out when the motor speed exceeds the setup speed of this parameter, Pr62 • The setup of P62 is valid for both CCW and CW direction regardless of the motor rotational direction. • There is hysteresis of 10 [r/min] . 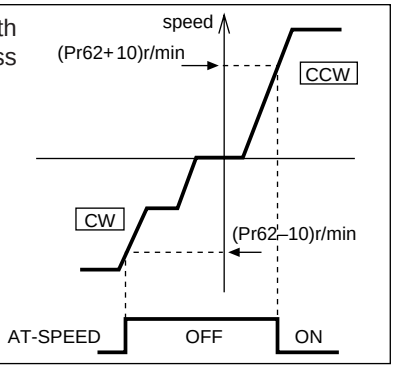
65	LV trip selection at main power OFF	0 to 1 <1>	–	You can select whether or not to activate Err13 (Main power under-voltage protection) function while the main power shutoff continues for the setup of Pr6D (Main power-OFF detection time). **Setup value** / **Action of main power low voltage protection** 0 — When the main power is shut off during Servo-ON, Err13 will not be triggered and the driver turns to Servo-OFF. The driver returns to Servo-ON again after the main power resumption. <1> — When the main power is shut off during Servo-ON, the driver will trip due to Err13 (Main power low voltage protection). **<Caution>** This parameter is invalid when Pr6D (Detection time of main power OFF)=1000. Err13 (Main power under-voltage protection) is triggered when setup of P66D is long and P-N voltage of the main converter falls below the specified value before detecting the main power shutoff, regardless of the Pr65 setup. Refer to P.42, "Timing Chart-At Power-ON" of Preparation as well.

Standard default : < >

<table>
<tr><th>PrNo.</th><th>Title</th><th>Setup range</th><th>Unit</th><th>Function/Content</th></tr>
<tr><td>66
*</td><td>Sequence at over-travel inhibit</td><td>0 to 2
<0></td><td>–</td><td>You can set up the running condition during deceleration or after stalling, while over-travel inhibit input (CCWL : Connector CN X5, Pin-9 or CWL : Connector CN X5, Pin-8) is valid
<table>
<tr><th>Setup value</th><th>During deceleration</th><th>After stalling</th><th>Deviation counter content</th></tr>
<tr><td><0></td><td>Dynamic brake action</td><td>Torque command=0 towards inhibited direction</td><td>Hold</td></tr>
<tr><td>1</td><td>Torque command=0 towards inhibited direction</td><td>Torque command=0 towards inhibited direction</td><td>Hold</td></tr>
<tr><td>2</td><td>Emergency stop</td><td>Torque command=0 towards inhibited direction</td><td>Clears before/ after deceleration</td></tr>
</table>
<Caution>
In case of the setup value of 2, torque limit during deceleration will be limited by the setup value of Pr6E (Torque setup at emergency stop).</td></tr>
<tr><td>67</td><td>Sequence at main power OFF</td><td>0 to 9
<0></td><td>–</td><td>When Pr65 (LV trip selection at main power OFF) is 0, you can set up,
1) the action during deceleration and after stalling
2) the clearing of deviation counter content
after the main power is shut off.
<table>
<tr><th rowspan="2">Setup value</th><th colspan="2">Action</th><th rowspan="2">Deviation counter content</th></tr>
<tr><th>During deceleration</th><th>After stalling</th></tr>
<tr><td><0></td><td>DB</td><td>DB</td><td>Clear</td></tr>
<tr><td>1</td><td>Free-run</td><td>DB</td><td>Clear</td></tr>
<tr><td>2</td><td>DB</td><td>Free-run</td><td>Clear</td></tr>
<tr><td>3</td><td>Free-run</td><td>Free-run</td><td>Clear</td></tr>
<tr><td>4</td><td>DB</td><td>DB</td><td>Hold</td></tr>
<tr><td>5</td><td>Free-run</td><td>DB</td><td>Hold</td></tr>
<tr><td>6</td><td>DB</td><td>Free-run</td><td>Hold</td></tr>
<tr><td>7</td><td>Free-run</td><td>Free-run</td><td>Hold</td></tr>
<tr><td>8</td><td>Emergency stop</td><td>DB</td><td>Clear</td></tr>
<tr><td>9</td><td>Emergency stop</td><td>Free-run</td><td>Clear</td></tr>
</table>
(DB: Dynamic Brake action)
<Caution>
In case of the setup value of 8 or 9, torque limit during deceleration will be limited by the setup value of Pr6E (Torque setup at emergency stop).</td></tr>
<tr><td>68</td><td>Sequence at alarm</td><td>0 to 3
<0></td><td>–</td><td>You can set up the action during deceleration or after stalling when some error occurs while either one of the protective functions of the driver is triggered.
<table>
<tr><th rowspan="2">Setup value</th><th colspan="2">Action</th><th rowspan="2">Deviation counter content</th></tr>
<tr><th>During deceleration</th><th>After stalling</th></tr>
<tr><td><0></td><td>DB</td><td>DB</td><td>Hold</td></tr>
<tr><td>1</td><td>Free-run</td><td>DB</td><td>Hold</td></tr>
<tr><td>2</td><td>DB</td><td>Free-run</td><td>Hold</td></tr>
<tr><td>3</td><td>Free-run</td><td>Free-run</td><td>Hold</td></tr>
</table>
(DB: Dynamic Brake action)
<Caution>
The content of the deviation counter will be cleared when clearing the alarm. Refer to P.43, "Timing Chart (When an error (alarm) occurs (at Servo-ON command status)" of Preparation.</td></tr>
</table>

<Notes>

- For parameters which No. have a suffix of "*", changed contents will be validated when you turn on the control power.

Standard default : < >

PrNo.	Title	Setup range	Unit	Function/Content
69	Sequence at Servo-Off	0 to 9 <0>	–	You can set up, 1) the action during deceleration and after stalling 2) the clear treatment of deviation counter is set up. The relation between the setup value of Pr69 and the action/deviation counter clearance is same as that of Pr67 (Sequence at Main Power Off) Refer to P.44, "Timing Chart"-Servo-ON/OFF action while the motor is at stall" of Preparation as well.
6A	Setup of mechanical brake action at stalling	0 to 100 <0>	2ms	You can set up the time from when the brake release signal (BRK-OFF : CN X5, Pin-10 and 11) turns off to when the motor is de-energized (Servo-free), when the motor turns to Servo-OFF while the motor is at stall. • Set up to prevent a micro-travel/ drop of the motor (work) due to the action delay time (tb) of the brake • After setting up Pr6a ≧ tb, then compose the sequence so as the driver turns to Servo-OFF after the brake is actually activated. 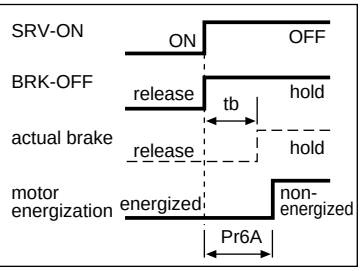 Refer to P.44, "Timing Chart"-Servo-ON/OFF Action While the Motor Is at Stall" of Preparation as well.
6B	Setup of mechanical brake action at running	0 to 100 <0>	2ms	You can set up time from when detecting the off of Servo-ON input signal (SRV-ON : CN X5, Pin-29) is to when external brake release signal (BRK-OFF : CN X5, Pin-10 and 11) turns off, while the motor turns to servo off during the motor in motion. • Set up to prevent the brake deterioration due to the motor running. • At Servo-OFF during the motor is running, tb of the right fig. will be a shorter one of either Pr6B setup time, or time lapse till the motor speed falls below 30r/min. 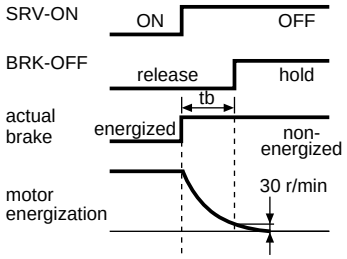 Refer to P.45, "Timing Chart"-Servo-ON/OFF action while the motor is in motion" of Preparation as well.

Parameter Setup

Standard default : < >

<table>
<tr><th>PrNo.</th><th>Title</th><th>Setup range</th><th>Unit</th><th>Function/Content</th></tr>
<tr><td>6C
*</td><td>Selection of external regenerative resistor</td><td>0 to 3
for
A, B-frame
<3>
for
C to F-frame
<0></td><td>–</td><td>With this parameter, you can select either to use the built-in regenerative resistor of the driver, or to separate this built-in regenerative resistor and externally install the regenerative resistor (between RB1 and RB2 of Connector CN X2 in case of A to D-frame, between P and B2 of terminal block in case of E, F-frame).
<table>
<tr><th>Setup value</th><th>Regenerative resistor to be used</th><th>Regenerative processing and regenerative resistor overload</th></tr>
<tr><td><0>
(C, D, E and F-frame)</td><td>Built-in resistor</td><td>Regenerative processing circuit will be activated and regenerative resistor overload protection will be triggered according to the built-in resistor (approx. 1% duty).</td></tr>
<tr><td>1</td><td>External resistor</td><td>The driver trips due to regenerative overload protection (Err18), when regenerative processing circuit is activated and its active ratio exceeds 10%,</td></tr>
<tr><td>2</td><td>External resistor</td><td>Regenerative processing circuit is activated, but no regenerative over-load protection is triggered.</td></tr>
<tr><td><3>
(A, B-frame)</td><td>No resistor</td><td>Both regenerative processing circuit and regenerative protection are not activated, and built-in capacitor handles all regenerative power.</td></tr>
</table>
<Remarks>
Install an external protection such as thermal fuse when you use the external regenerative resistor.
Otherwise, the regenerative resistor might be heated up abnormally and result in burnout, regardless of validation or invalidation of regenerative over-load protection.
<Caution>
When you use the built-in regenerative resistor, never to set up other value than 0. Don't touch the external regenerative resistor.
External regenerative resistor gets very hot, and might cause burning.</td></tr>
<tr><td>6D
*</td><td>Detection time of main power off</td><td>35 to 1000
<35></td><td>2ms</td><td>You can set up the time to detect the shutoff while the main power is kept shut off continuously.
The main power off detection is invalid when you set up this to 1000.</td></tr>
<tr><td>6E</td><td>Torque setup at emergency stop</td><td>0 to 500
<0></td><td>%</td><td>You can set up the torque limit in case of emergency stop as below.
• During deceleration of over-travel inhibit with the setup 2 of Pr66 (Sequence at over-travel inhibit input)
• During deceleration with the setup of 8 or 9 of Pr67 (Sequence at main power off)
• During deceleration with the setup of 8 or 9 of Pr69 (Sequence at Servo-OFF)
Normal torque limit is used by setting this to 0.</td></tr>
<tr><td>70</td><td>Setup of position deviation excess</td><td>0 to 32767
<25000></td><td>256 x resolution</td><td>• You can set up the excess range of position deviation.
• Set up with the encoder pulse counts at the position control and with the external scale pulse counts at the full-closed control.
• Err24 (Error detection of position deviation excess) becomes invalid when you set up this to 0.</td></tr>
<tr><td>72</td><td>Setup of over-load level</td><td>0 to 500
<0></td><td>%</td><td>• You can set up the over-load level. The overload level becomes 115 [%] by setting up this to 0.
• Use this with 0 setup in normal operation. Set up other value only when you need to lower the over-load level.
• The setup value of this parameter is limited by 115[%] of the motor rating.</td></tr>
<tr><td>73</td><td>Setup of over-speed level</td><td>0 to 20000
<0></td><td>r/min</td><td>• You can set up the over-speed level. The over-speed level becomes 1.2 times of the motor max. speed by setting up this to 0.
• Use this with 0 setup in normal operation. Set up other value only when you need to lower the over-speed level.
• The setup value of this parameter is limited by 1.2 times of the motor max. speed.
<Caution>
The detection error against the setup value is ±3 [r/min] in case of the 7-wire absolute encoder, and ±36 [r/min] in case of the 5-wire incremental encoder.</td></tr>
</table>

<Notes>

• For parameters which No. have a suffix of "*", changed contents will be validated when you turn on the control power.

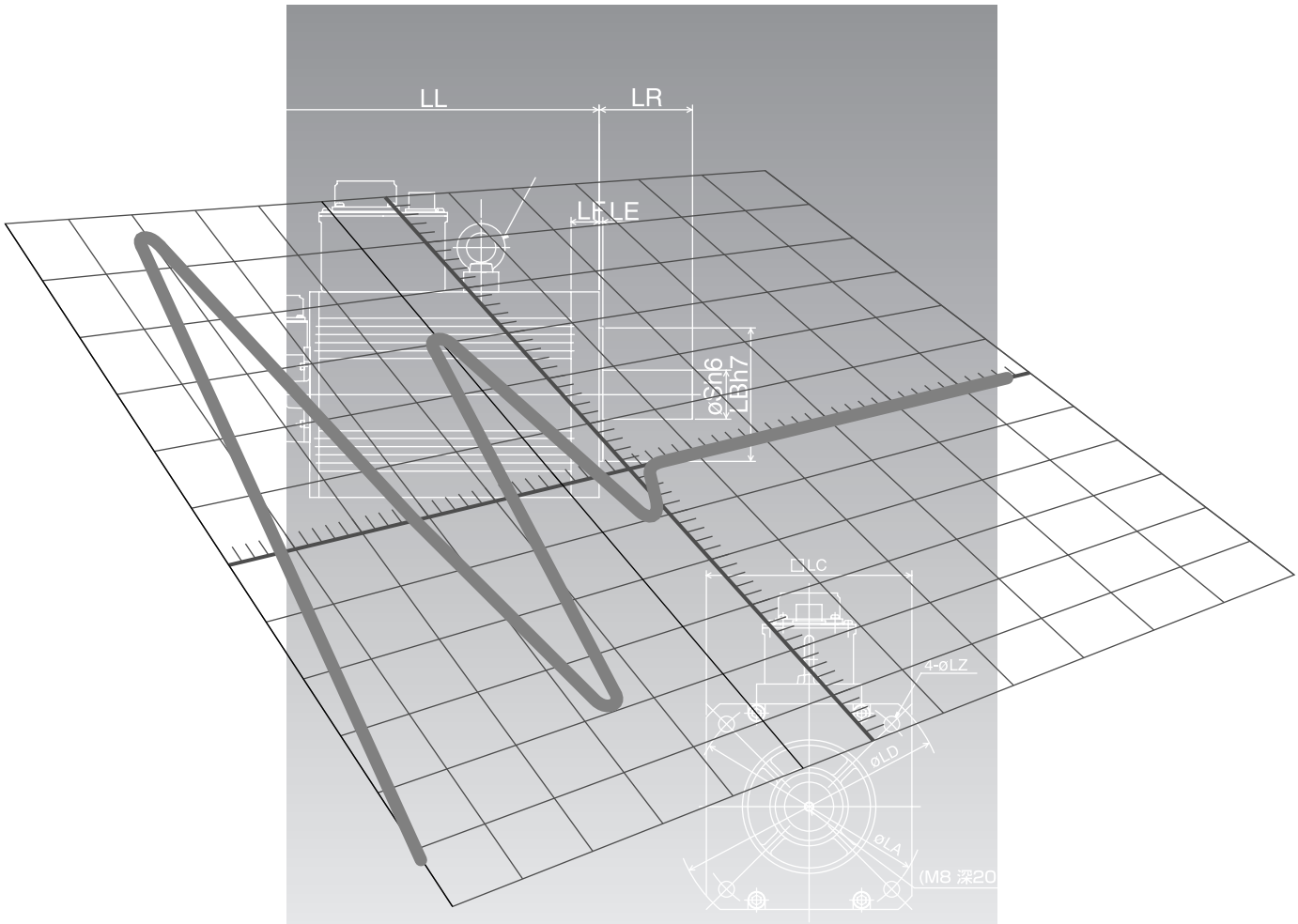

[Connection and Setup of Torque Control Mode]

page

Control Block Diagram of Torque Control Mode 160

Wiring to the Connector, CN X5 161

Wiring Example to the Connector, CN X5 161
Interface Circuit 162
Input Signal and Pin No. of the Connector, CN X5 164
Output Signal and Pin No. of the Connector, CN X5 168

Trial Run (JOG Run) at Torque Control Mode 171

Inspection Before Trial Run 171
Trial Run by Connecting the Connector, CN X5 171

Real-Time Auto-Gain Tuning 172

Outline 172
Applicable Range 172
How to Operate 172
Parameters Which are Automatically Set up 173

Parameter Setup 174

Parameters for Functional Selection 174
Parameters for Adjustment of Time Constant of Gains and Filters 177
Parameters for Auto-Gain Tuning 178
Parameters for Adjustment (2nd Gain Switching Function) 179
Parameters for Position Control 181
Parameters for Velocity/Torque Control 183
Parameters for Sequence 185

Control Block Diagram of Torque Control Mode

• when Pr5B (Torque command selection) is 0

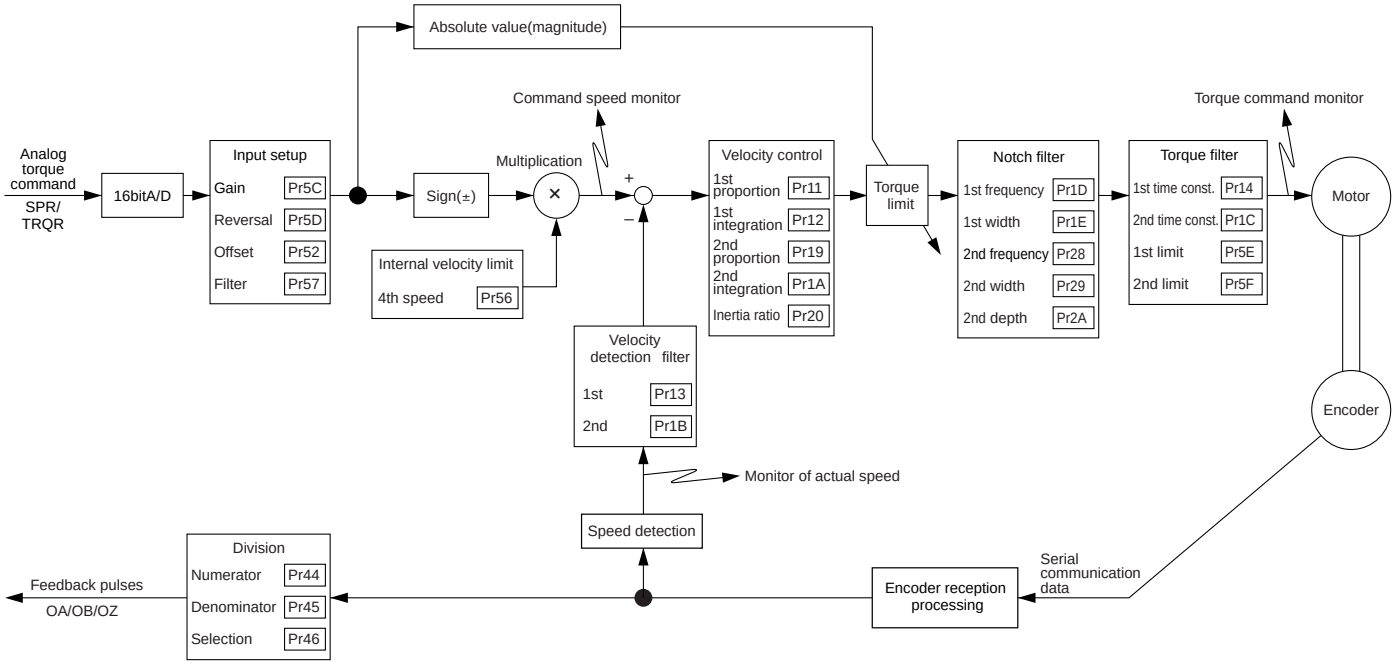

• when Pr5B (Torque command selection) is 1

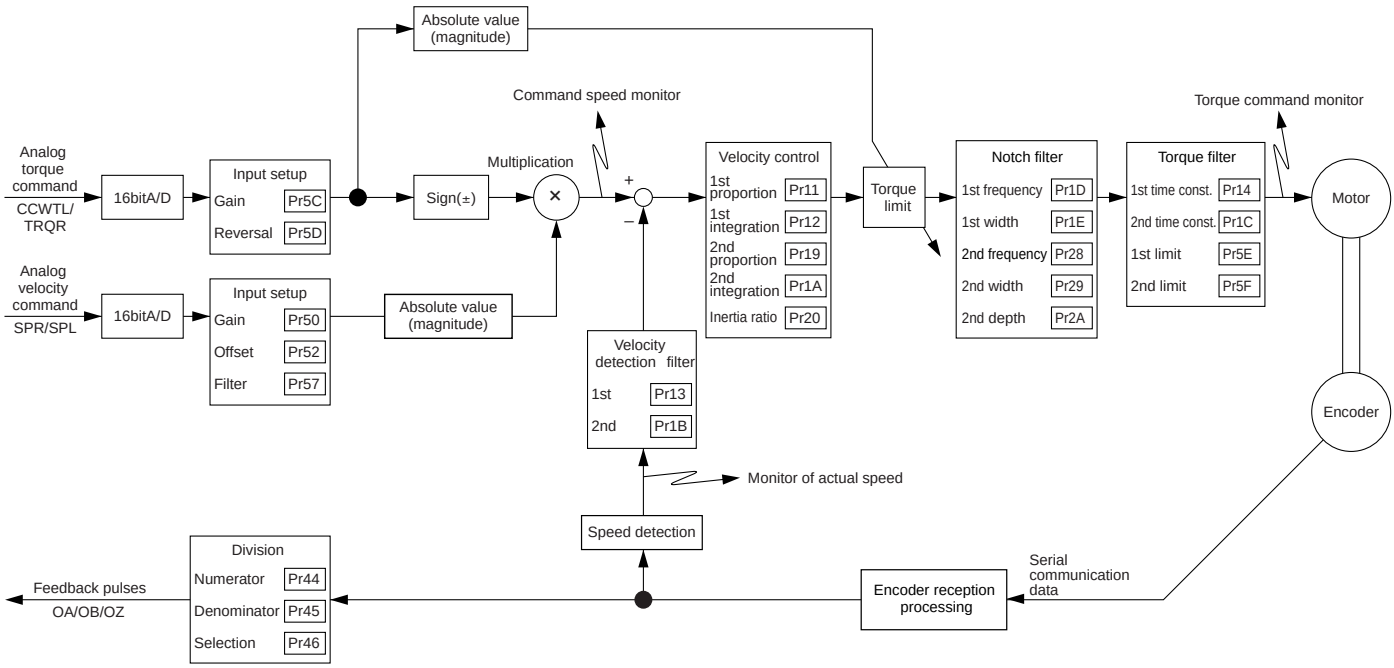

Wiring Example to the Connector CN X5

Wiring Example of Torque Control Mode

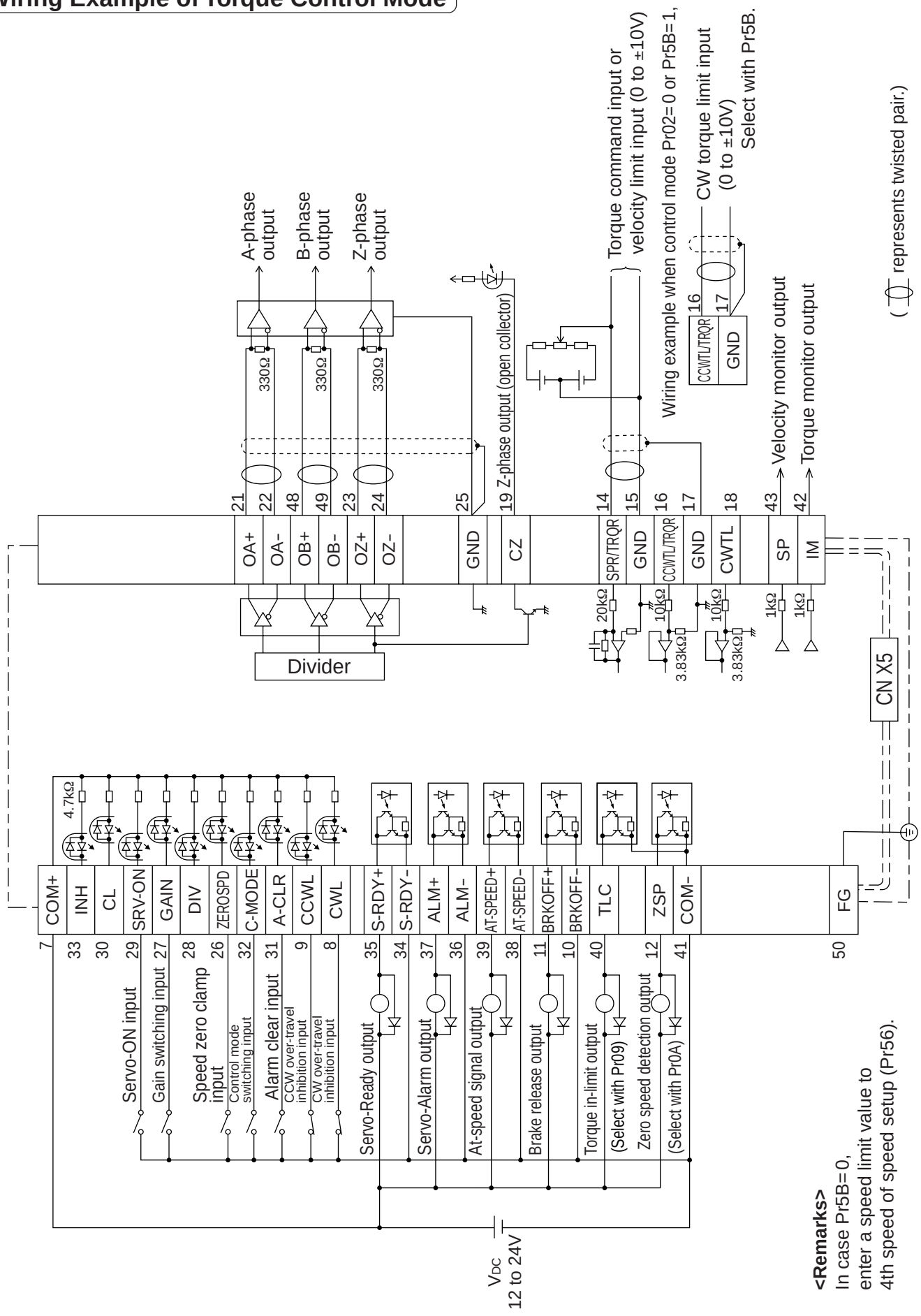

Wiring to the connector, CN X5

Interface Circuit

Input Circuit

SI Connection to sequence input signals

- Connect to contacts of switches and relays, or open collector output transistors.
- When you use contact inputs, use the switches and relays for micro current to avoid contact failure.
- Make the lower limit voltage of the power supply (12 to 24V) as 11.4V or more in order to secure the primary current for photo-couplers.

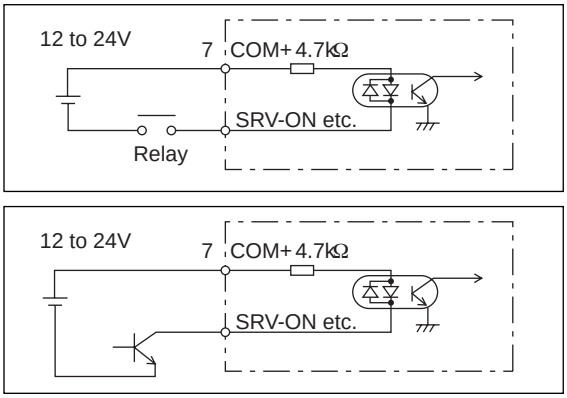

AI Analog command input

- The analog command input goes through 3 routes, SPR/TRQR(Pin-14), CCWTL (Pin-16) and CWTL (Pin-18).
- Max. permissible input voltage to each input is ±10V. For input impedance of each input, refer to the right Fig.
- When you compose a simple command circuit using variable resistor(VR) and register R, connect as the right Fig. shows. When the variable range of each input is made as –10V to +10V, use VR with 2kΩ, B-characteristics, 1/2W or larger, R with 200Ω, 1/2W or larger.
- A/D converter resolution of each command input is as follows.
  (1)ADC1 : 16 bit (SPR/TRQR), (including 1bit for sign), ±10V
  (2)ADC2 : 10 bit (CCWTL, CWTL), 0 to 3.3V

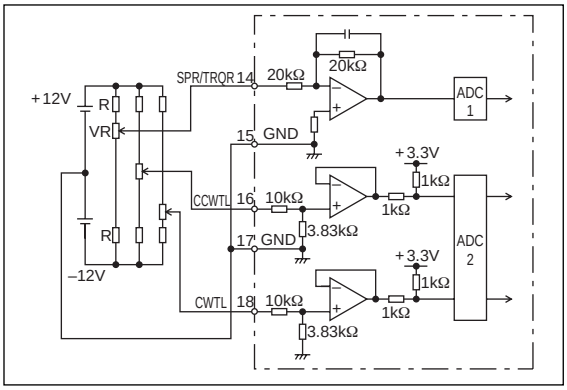

Output Circuit

SO1 SO2 Sequence output circuit

- The output circuit is composed of open collector transistor outputs in the Darlington connection, and connect to relays or photo-couplers.
- There exists collector to emitter voltage, V_{CE} (SAT) of approx. 1V at transistor-ON, due to the Darlington connection of the output or. Note that normal TTL IC cannot be directly connected since it does not meet VIL.
- There are two types of output, one which emitter side of the output transistor is independent and is connectable individually, and the one which is common to – side of the control power supply (COM–).
- If a recommended primary current value of the photo-coupler is 10mA, decide the resistor value using the formula of the right Fig.

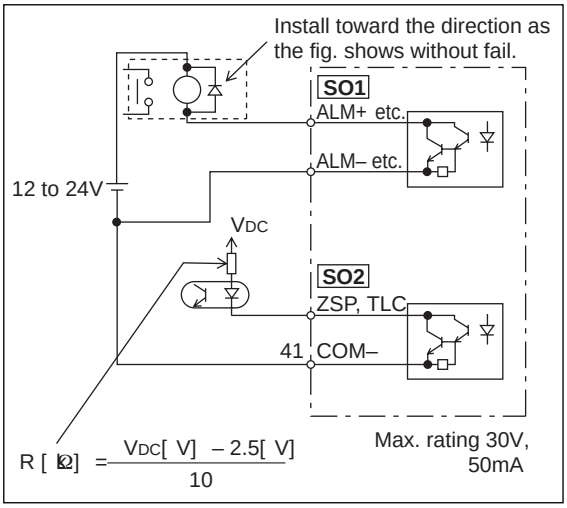

For the recommended primary current value, refer to the data sheet of apparatus or photo-coupler to be used.

PO1 Line driver (Differential output) output

- Feeds out the divided encoder outputs (A, B and Z-phase) in differential through each line driver.
- At the host side, receive these in line receiver. Install a terminal resistor (approx. 330Ω) between line receiver inputs without fail.
- These outputs are not insulated.

represents twisted pair.

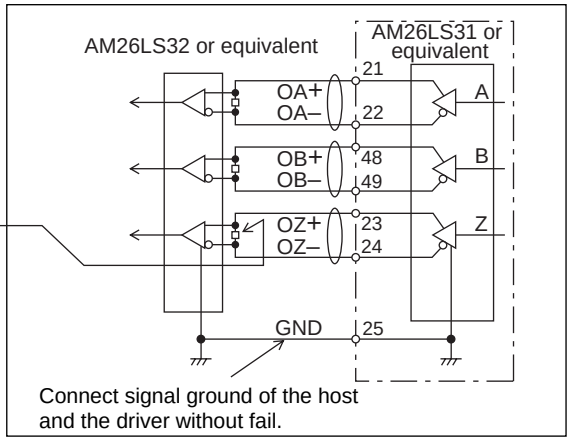

PO2 Open collector output

- Feeds out the Z-phase signal among the encoder signals in open collector. This output is not insulated.
- Receive this output with high-speed photo couplers at the host side, since the pulse width of the Z-phase signal is narrow.

represents twisted pair.

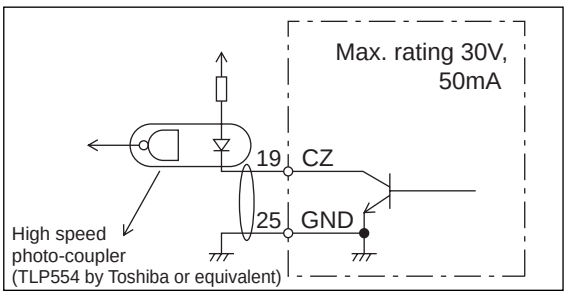

AO Analog monitor output

- There are two outputs, the speed monitor signal output (SP) and the torque monitor signal output (IM)
- Output signal width is ±10V.
- The output impedance is 1kΩ. Pay an attention to the input impedance of the measuring instrument or the external circuit to be connected.

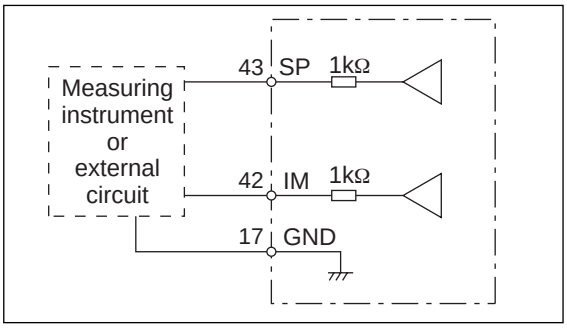

<Resolution>

(1) Speed monitor output (SP)
With a setup of 6V/3000r/min (Pr07=3), the resolution converted to speed is 8r/min/16mV.

(2) Torque monitor output (IM)
With a relation of 3V/rated torque (100%), the resolution converted to torque is 0.4%/12mV.

Wiring to the connector, CN X5

Input Signal and Pin No. of the Connector, CN X5

Input Signals (common) and Their Functions

<table>
<tr><th>Title of signal</th><th>Pin No.</th><th>Symbol</th><th>Function</th><th>I/F circuit</th></tr>
<tr><td>Power supply for control signal (+)</td><td>7</td><td>COM+</td><td>• Connect + of the external DC power supply (12 to 24V).
• Use the power supply voltage of 12V ± 5% – 24V ± 5%</td><td>–</td></tr>
<tr><td>Power supply for control signal (–)</td><td>41</td><td>COM–</td><td>• Connect – of the external DC power supply (12 to 24V).
• The power capacity varies depending on a composition of I/O circuit. 0.5A or more is recommended.</td><td>–</td></tr>
<tr><td>CW over-travel inhibit input</td><td>8</td><td>CWL</td><td>• Use this input to inhibit a CW over-travel (CWL).
• Connect this so as to make the connection to COM– open when the moving portion of the machine over-travels the movable range toward CW.
• CWL input will be invalidated when you set up Pr04 (Setup of over-travel inhibit input) to 1.Default is "Invalid (1)".
• You can select the action when the CWL input is validated with the setup of up Pr66 (Sequence at over-travel inhibit). Default is "Emergency stop with dynamic brake".(Pr66=0)</td><td>SI
P.162</td></tr>
<tr><td>CCW over-travel inhibit input</td><td>9</td><td>CCWL</td><td>• Use this input to inhibit a CCW over-travel (CCWL).
• Connect this so as to make the connection to COM- open when the moving portion of the machine over-travels the movable range toward CCW.
• CWL input will be invalidated when you set up Pr04 (Setup of over-travel inhibit input) to 1.Default is "Invalid (1)".
• You can select the action when the CCWL input is validated with the setup of Pr66 (Sequence at over-travel inhibit). Default is "Emergency stop with dynamic brake".(Pr66=0)</td><td>SI
P.162</td></tr>
<tr><td>Speed zero clamp input</td><td>26</td><td>ZEROSPD</td><td>• Function varies depending on the control mode.
<table>
<tr><td>Velocity/ Torque control</td><td>• Becomes to a speed-zero clamp input (ZEROSPD).
<table>
<tr><th>Pr06</th><th>Connection to COM–</th><th>Content</th></tr>
<tr><td>0</td><td>–</td><td>ZEROSPD input is invalid.</td></tr>
<tr><td rowspan="2">1</td><td>open</td><td>Speed command is 0</td></tr>
<tr><td>close</td><td>Normal action</td></tr>
<tr><td rowspan="2">2</td><td>open</td><td>Speed command is to CCW</td></tr>
<tr><td>close</td><td>Speed command is to CW.</td></tr>
</table>
• In case Pr06 is 2 at torque control, ZERPSPD is invalid.</td></tr>
<tr><td>Position/ Full-closed control</td><td>• Becomes to an input of damping control switching (VS-SEL).
• While Pr24 (Damping filter switching selection) is 1, the 1st damping filter (Pr2B, Pr2C) will be validated when you open this input, and the 2nd damping filter (Pr2D, Pr2E) will be validated when you connect this input to COM–.</td></tr>
</table></td><td>SI
P.162</td></tr>
<tr><td>Gain switching input
or
Torque limit switching input</td><td>27</td><td>GAIN

TL-SEL</td><td>• Function varies depending on the setups of Pr30 (2nd gain setup) and Pr03 (Selection of torque limit).
<table>
<tr><th>Pr03</th><th>Pr30</th><th>Connection to COM–</th><th>Content</th></tr>
<tr><td rowspan="6">0 – 2</td><td rowspan="2">0</td><td>open</td><td>Velocity loop : PI (Proportion/Integration) action</td></tr>
<tr><td>close</td><td>Velocity loop : P (Proportion) action</td></tr>
<tr><td rowspan="4">1</td><td colspan="2">when the setups of Pr31 and Pr36 are 2</td></tr>
<tr><td>open</td><td>1st gain selection (Pr10,11,12,13 and 14)</td></tr>
<tr><td>close</td><td>2nd gain selection (Pr18,19,1A,1B and 1C)</td></tr>
<tr><td colspan="2">when the setups of Pr31 and Pr36 are other than 2</td></tr>
<tr><td>3</td><td>–</td><td colspan="2">• Input of torque limit switching (TL-SEL)
• Pr5E (Setup of 1st torque limit) will be validated when you open this input, and Pr5F (Setup of 2nd torque limit) will be validated when you connect this input to COM–.</td></tr>
</table>
• For details of 2nd gain switching function, refer to P.243 "Gain Switching Function" of Adjustment.</td><td>SI
P.162</td></tr>
</table>

<table>
<tr><th>Title of signal</th><th>Pin No.</th><th>Symbol</th><th>Function</th><th>I/F circuit</th></tr>
<tr><td>Servo-ON input</td><td>29</td><td>SRV-ON</td><td>• Turns to Servo-ON status by connecting this input to COM–.
• Turns to Servo-OFF status by opening connection to COM–, and current to the motor will be shut off.
• You can select the dynamic brake action and the deviation counter clearing action at Servo-OFF with Pr69 (Sequence at Servo-OFF).
<Caution>
1.Servo-ON input becomes valid approx. 2 sec after power-on.
(see P.42, "Timing Chart" of Preparation.)
2.Never run/stop the motor with Servo-ON/OFF.
3.After shifting to Servo-ON, allow 100ms or longer pause before entering the pulse command.</td><td>SI
P.162</td></tr>
<tr><td>Alarm clear input</td><td>31</td><td>A-CLR</td><td>• You can release the alarm status by connecting this to COM– for more than 120ms.
• The deviation counter will be cleared at alarm clear.
• There are some alarms which cannot be released with this input.
For details, refer to P.252, "Protective Function " of When in Trouble.</td><td>SI
P.162</td></tr>
<tr><td>Control mode switching input</td><td>32</td><td>C-MODE</td><td>• You can switch the control mode as below by setting up Pr02 (Control mode setup) to 3-5.
<table>
<tr><th>Pr02 setup</th><th>Open (1st)</th><th>Connection to COM– (2nd)</th></tr>
<tr><td>3</td><td>Position control</td><td>Velocity control</td></tr>
<tr><td>4</td><td>Position control</td><td>Torque control</td></tr>
<tr><td>5</td><td>Velocity control</td><td>Torque control</td></tr>
</table>
<Caution>
Depending on how the command is given at each control mode, the action might change rapidly when switching the control mode with C-MODE. Pay an extra attention.</td><td>SI
P.162</td></tr>
</table>

Wiring to the connector, CN X5

Input Signals (Analog Command) and Their Functions

<table>
<tr><th>Title of signal</th><th>Pin No.</th><th>Symbol</th><th>Function</th><th>I/F circuit</th></tr>
<tr><td>Torque command input,
or
Speed limit input</td><td>14</td><td>TRQR

SPL</td><td>
• Function varies depending on control mode.
<table>
<tr><th>Pr02</th><th>Control mode</th><th>Function</th></tr>
<tr><td>2
4</td><td>Torque control

Position/ Torque</td><td>
• Function varies depending on Pr5B (Selection of torque command)
<table>
<tr><th>Pr5B</th><th>Content</th></tr>
<tr><td>0</td><td>• Torque command (TRQR) will be selected.
• Set up the torque (TRQR) gain, polarity offset and filter with;
Pr5C (Torque command input gain)
Pr5D (Torque command input reversal)
Pr52 (Speed command offset)
Pr57 (Speed command filter setup)</td></tr>
<tr><td>1</td><td>• Speed limit (SPL) will be selected.
• Set up the speed limit (SPL) gain, offset and filter with;
Pr50 (Speed command input gain)
Pr52 (Speed command offset)
Pr57 (Speed command filter setup)</td></tr>
</table>
</td></tr>
<tr><td>5</td><td>Velocity/ Torque</td><td>
• Function varies depending on Pr5B (Selection of torque command)
<table>
<tr><th>Pr5B</th><th>Content</th></tr>
<tr><td>0</td><td>• This input becomes invalid.</td></tr>
<tr><td>1</td><td>• Speed limit (SPL) will be selected.
• Set up the speed limit (SPL) gain, offset and filter with;
Pr50 (Speed command input gain)
Pr52 (Speed command offset)
Pr57 (Speed command filter setup)</td></tr>
</table>
</td></tr>
<tr><td>Others</td><td>Other control mode</td><td>• This input is invalid.</td></tr>
</table>
•The resolution of the A/D converter used in this input is 16 bit (including 1 bit for sign).
± 32767 (LSB) = ± 10[V] , 1[LSB] = 0.3[mV]
</td><td>AI
P.162</td></tr>
</table>

*Function becomes valid when the control mode with underline (▭ / ▭) is selected while the switching mode is used in the control mode in table.

<table>
<tr><th>Title of signal</th><th>Pin No.</th><th>Symbol</th><th>Function</th><th>I/F circuit</th></tr>
<tr><td>Torque command input</td><td>16</td><td>TRQR</td><td>
• Function varies depending on Pr02 (Control mode setup).
<table>
<tr><th>Pr02</th><th>Control mode</th><th>Function</th></tr>
<tr><td>2
4</td><td>Torque Control
Position/Torque</td><td>
• Function varies depending on Pr5B (Selection of torque command)
<table>
<tr><th>Pr5B</th><th>Content</th></tr>
<tr><td>0</td><td>This input becomes invalid.</td></tr>
<tr><td>1</td><td>• Torque command input (TRQR) will be selected.
• Set up the gain and polarity of the command with;
Pr5C (Torque command input gain)
Pr5D (Torque command input reversal)
• Offset and filter cannot be set up.</td></tr>
</table>
</td></tr>
<tr><td>5</td><td>Velocity/
Torque</td><td>• Becomes to the torque command input (TRQR).
• Set up the gain and polarity of the command with;
Pr5C (Torque command input gain)
Pr5D (Torque command input reversal)
• Offset and filter cannot be set up.</td></tr>
<tr><td>4
5
Other</td><td>Position/Torque
Velocity/Torque
Other
control mode</td><td>• Becomes to the analog torque limit input to CCW (CCWTL).
• Limit the CCW-torque by applying positive voltage (0 to +10V) (Approx.+3V/rated torque)
• Invalidate this input by setting up Pr03 (Torque limit selection) to other than 0.</td></tr>
</table>
• Resolution of A/D converter used in this input is 16 bit (including 1 bit for sign).
± 511 [LSB] ≒ 11.9[V] , 1 [LSB] ≒ 23[mV]
</td><td>AI
P.162</td></tr>
</table>

*Function becomes valid when the control mode with underline (▭ / ▭) is selected while the switching mode is used in the control mode in table.

<Remark>

Do not apply more than ±10V to analog command inputs of SPR/TRQR/SPL

Do not apply more than ±10V to analog command input of TRQR.

Wiring to the connector, CN X5

Output signal and Pin No. of the Connector, CN X5

Output Signals (Common) and Their Functions

Title of signal	Pin No	Symbol	Function	I/F circuit
External brake release signal	**11** **10**	**BRKOFF+** **BRKOFF–**	• Feeds out the timing signal which activates the electromagnetic brake of the motor. • Turns the output transistor ON at the release timing of the electro-magnetic brake. • You can set up the output timing of this signal with Pr6A (Setup of mechanical brake action at stall) and Pr6B (Setup of mechanical brake action at motion). For details, refer to P42, "Timing Chart" of Preparation.)	SO1 P.163
Servo-Ready output	**35** **34**	**S-RDY+** **S-RDY–**	• This signal shows that the driver is ready to be activated. • Output transistor turns ON when both control and main power are ON but not at alarm status.	SO1 P.163
Servo-Alarm output	**37** **36**	**ALM+** **ALM–**	• This signal shows that the driver is in alarm status.. • Output transistor turns ON when the driver is at normal status, and turns OFF at alarm status.	SO1 P.163
Speed arrival output	**39** **38**	**AT-SPEED+** **AT-SPEED–**	• Function varies depending on the control mode. **Position control**: • Output of positioning complete (COIN) • The output transistor will turn ON when the absolute value of the position deviation pulse becomes smaller than the setup value of Pr60 (Positioning complete range). • You can select the feeding out method with Pr63 (Setup of positioning complete output). **Full-closed control**: • Output of full-closed positioning complete (EX-COIN) • The output transistor will turn ON when the absolute value of full-closed-position deviation pulse becomes smaller than the setup value of Pr60 (Positioning complete range). • You can select the feeding out method with Pr63 (Setup of positioning complete output). **Velocity/ Torque control**: • Output at-speed (speed arrival) (AT-SPEED) • The output transistor will turn ON when the actual motor speed exceeds the setup value of Pr62 (In-speed).	SO1 P.163
Zero-speed detection output signal	**12** **(41)**	**ZSP** **(COM–)**	• Content of the output signal varies depending on Pr0A (Selection of ZSP output). • Default is 1, and feeds out the zero speed detection signal. • For details, see the table below, "Selection of TLC,ZSP output".	SO2 P.163
Torque in-limit signal output	**40** **(41)**	**TLC** **(COM–)**	• Content of the output signal varies depending on Pr09 (Selection of TLC output). • Default is 1, and feeds out the torque in-limit signal. • For details, see the table below, "Selection of TLC,ZSP output".	SO2 P.163

• Selection of TCL and ZSP outputs

Value of Pr09 or Pr0A	X5 TLC : Output of Pin-40	X5 ZSP : Output of Pin-12
0	**• Torque in-limit output (Default of X5 TLC Pr09)** The output transistor turns ON when the torque command is limited by the torque limit during Servo-ON.	
1	**• Zero-speed detection output (Default of X5 ZSP Pr0A)** The output transistor turns ON when the motor speed falls under the preset value with Pr61.	
2	**• Alarm signal output** The output transistor turns ON when either one of the alarms is triggered, over-regeneration alarm, overload alarm, battery alarm, fan-lock alarm or external scale alarm.	
3	**• Over-regeneration alarm** The output transistor turns ON when the regeneration exceeds 85% of the alarm trigger level of the regenerative load protection.	
4	**• Over-load alarm** The output transistor turns ON when the load exceeds 85% of the alarm trigger level of the overload alarm.	
5	**• Battery alarm** The output transistor turns ON when the battery voltage for absolute encoder falls lower than approx. 3.2V.	
6	**• Fan-lock alarm** The output transistor turns ON when the fan stalls for longer than 1s.	
7	**• External scale alarm** The output transistor turns ON when the external scale temperature exceeds 65°, or signal intensity is not enough (adjustment on mounting is required). Valid only at the full-closed control.	
8	**• In-speed (Speed coincidence) output** The output transistor turns ON when the difference between the actual motor speed and the speed command before acceleration/deceleration reaches within the preset range with Pr61. Valid only at the velocity and torque control.	

Output Signals (Pulse Train) and Their Functions

Title of signal	Pin No	Symbol	Function	I/F circuit
A-phase output	21	OA +	• Feeds out the divided encoder signal or external scale signal (A, B, Z-phase) in differential. (equivalent to RS422) • You can set up the division ratio with Pr44 (Numerator of pulse output division) and Pr45 (Denominator of pulse output division) • You can select the logic relation between A-phase and B-phase, and the output source with Pr46 (Reversal of pulse output logic). • When the external scale is made as an output source, you can set up the interval of Z-phase pulse output with Pr47 (Setup of external scale Z-phase). • Ground for line driver of output circuit is connected to signal ground (GND) and is not insulated. • Max. output frequency is 4Mpps (after quadrupled)	PO1 P.163
	22	OA –		
B-phase output	48	OB +		
	49	OB –		
Z-phase output	23	OZ +		
	24	OZ –		
Z-phase output	19	CZ	• Open collector output of Z-phase signal • The emitter side of the transistor of the output circuit is connected to the signal ground (GND) and is not insulated.	PO2 P.163

<Note>

• When the output source is the encoder

• If the encoder resolution $\times \frac{Pr44}{Pr45}$ is multiple of 4, Z-phase will be fed out synchronizing with A-phase.
In other case, the Z-phase width will be equal to the encoder resolution, and will not synchronize with A-phase because of narrower width than that of A-phase.

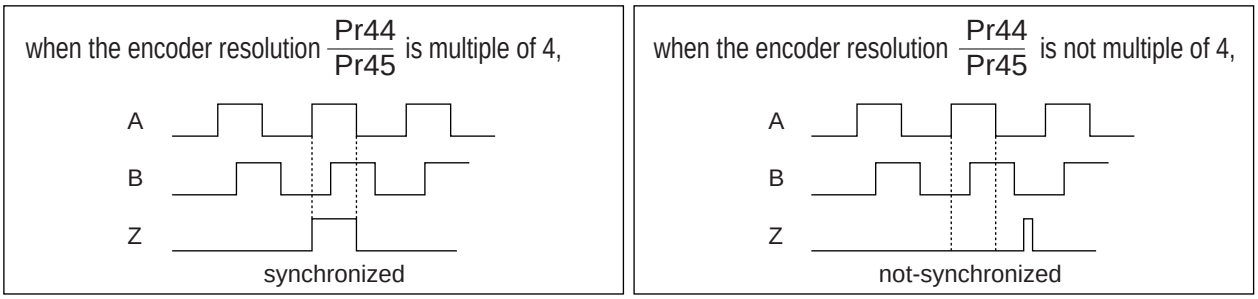

• In case of the 5-wire, 2500P/r incremental encoder, the signal sequence might not follow the above fig. until the first Z-phase is fed out. When you use the pulse output as the control signal, rotate the motor one revolution or more to make sure that the Z-phase is fed out at least once before using.

Wiring to the connector, CN X5

Output Signals (Analog) and Their Functions

<table>
<tr><th>Title of signal</th><th>Pin No</th><th>Symbol</th><th>Function</th><th>I/F circuit</th></tr>
<tr><td>Torque monitor signal output</td><td>42</td><td>IM</td><td>• The content of output signal varies depending on Pr08 (Torque monitor (IM) selection).
• You can set up the scaling with Pr08 value.
<table>
<tr><th>Pr08</th><th>Content of signal</th><th>Function</th></tr>
<tr><td>0,
11,12</td><td>Torque command</td><td>• Feeds out the voltage in proportion to the motor torque command with polarity.
+ : generates CCW torque
– : generates CW torque</td></tr>
<tr><td>1 – 5</td><td>Positional deviation</td><td>• Feeds out the voltage in proportion to the positional deviation pulse counts with polarity.
+ : positional command to CCW of motor position
– : positional command to CW of motor position</td></tr>
<tr><td>6 –10</td><td>Full-closed deviation</td><td>• Feeds out the voltage in proportion to the full-closed deviation pulse counts with polarity.
+ : positional command to CCW of external scale position
– : positional command to CW of external scale position</td></tr>
</table></td><td>AO
P.163</td></tr>
<tr><td>Speed monitor signal output</td><td>43</td><td>SP</td><td>• The content of the output signal varies depending on Pr07 (Speed monitor (IM) selection).
• You can set up the scaling with Pr07 value.
<table>
<tr><th>Pr07</th><th>Control mode</th><th>Function</th></tr>
<tr><td>0 – 4</td><td>Motor speed</td><td>• Feeds out the voltage in proportion to the motor speed with polarity. + : rotates to CCW
– : rotates to CW</td></tr>
<tr><td>5 – 9</td><td>Command speed</td><td>• Feeds out the voltage in proportion to the command speed with polarity.
+ : rotates to CCW
– : rotates to CW</td></tr>
</table></td><td>AO
P.163</td></tr>
</table>

Output Signals (Others) and Their Functions

Title of signal	Pin No	Symbol	Function	I/F circuit
Signal ground	**13,15, 17,25**	**GND**	• Signal ground • This output is insulated from the control signal power (COM–) inside of the driver.	–
Frame ground	**50**	**FG**	• This output is connected to the earth terminal inside of the driver.	–

Inspection Before Trial Run

(1) Wiring inspection
- Miswiring
  (Especially power input/motor output)
- Short/Earth
- Loose connection

(2) Check of power/voltage
- Rated voltage

(3) Fixing of the motor
- Unstable fixing

(4) Separation from mechanical system

(5) Release of the brake

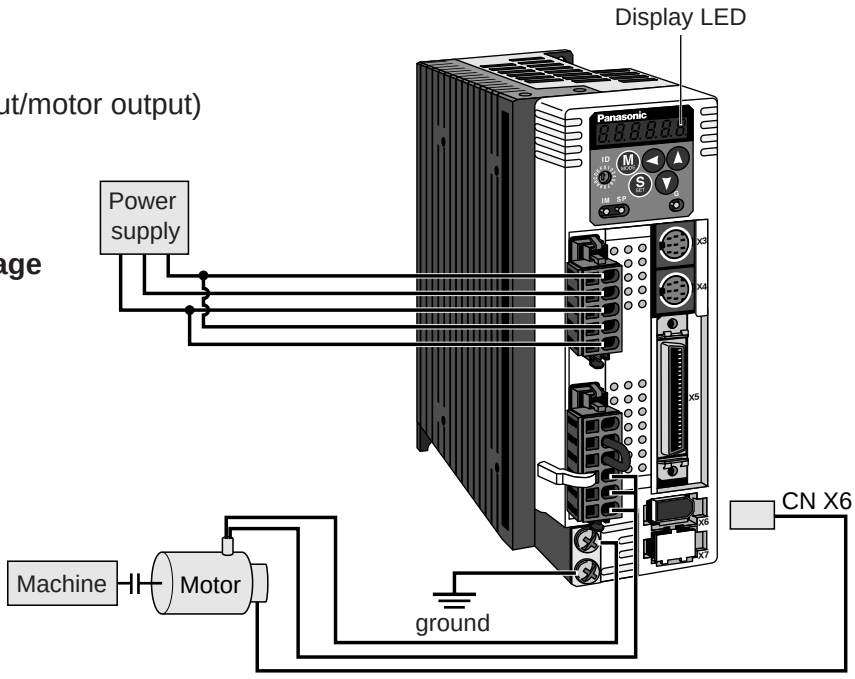

Trial Run by Connecting the Connector, CN X5

1) Connect the CN X5.
2) Enter the power (DC12-24V) to control signal (COM+ , COM–)
3) Enter the power to the driver.
4) Confirm the default values of parameters.
5) Set a lower value to Pr56 (4th speed of speed setup).
6) Energize the motor by connecting the Servo-ON input (SRV-ON, CN X5, Pin-29) and COM– (Pin-41 of CN X5) to turn to Servo-ON status.
7) Confirm that the motor runs as per the setup of Pr56 by applying DC voltage (positive/negative) between the torque command input (Pin-14 of CN X5) and GND (Pin-41 of CN X5).
8) If you want to change the torque magnitude, direction and velocity limit value against the command voltage, set up the following parameters.

Pr56 : 4th speed of speed setup
Pr5C : Torque command input gain
Pr5D : Torque command input reversal

Refer to P.183, "Parameter Setup-Parameters for Velocity and Torque Control".

9) If the motor does not run correctly, refer to P.68, "Display of factor for No-motor running" of Preparation.

Wiring Diagram

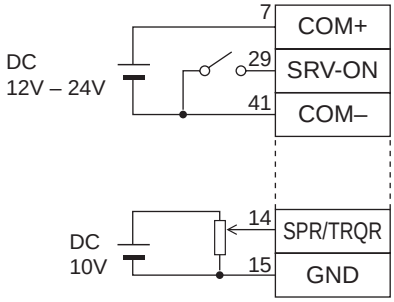

In case of one way running

For bi-directional running (CW/CCW), provide a bipolar power supply.

Parameter

PrNo.	Title	Setup value
02	Setup of control mode	2
04	Invalidation of over-travel inhibit input	1
06	Selection of ZEROSPD	0
56	4th speed of speed setup	lower value
5B	Selection of torque command	0
5C	Torque command input gain	Set up as required
5D	Torque command input reversal	

Input signal status

No.	Title of signal	Monitor display
0	Servo-ON	+A
5	Speed zero clamp	–

Real-Time Auto-Gain Tuning

Outline

The driver estimates the load inertia of the machine in real time, and automatically sets up the optimum gain responding to the result. Also the driver automatically suppress the vibration caused by the resonance with an adaptive filter.

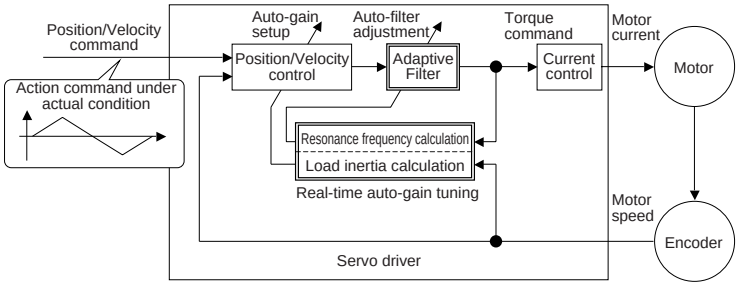

Applicable Range

- Real-time auto-gain tuning is applicable to all control modes.

Caution

Real-time auto-gain tuning may not be executed properly under the conditions described in the right table. In these cases, use the normal mode auto-gain tuning (refer to P.236 of Adjustment), or execute a manual gain tuning. (refer to P.240, of Adjustment)

	Conditions which obstruct real-time auto-gain tuning
Load inertia	• Load is too small or large compared to rotor inertia. (less than 3 times or more than 20 times) • Load inertia change too quickly. (10 [s] or less)
Load	• Machine stiffness is extremely low. • Chattering such as backlash exists.
Action pattern	• Motor is running continuously at low speed of 100 [r/min] or lower. • Acceleration/deceleration is slow (2000[r/min] per 1[s] or low). • Acceleration/deceleration torque is smaller than unbalanced weighted/viscous friction torque. • When speed condition of 100[r/min] or more and acceleration/deceleration condition of 2000[r/min] per 1[s] are not maintained for 50[ms] .

How to Operate

(1) Bring the motor to stall (Servo-OFF).
(2) Set up Pr21 (Real-time auto-gain tuning mode setup) to 1-7. Default is 1.

Setup value	Real-time auto-gain tuning	Varying degree of load inertia in motion
0	(not in use)	–
<1> ,4,7	normal mode	no change
2, 5		slow change
3, 6		rapid change

• When the varying degree of load inertia is large, set up 3.

(3) Set up Pr22 (Machine stiffness at real-time auto-gain tuning) to 0 or smaller value.
(4) Turn to Servo-ON to run the machine normally.
(5) Gradually increase Pr22 (Machine stiffness at real-time auto-gain tuning) when you want to obtain better response. Lower the value (0 to 3) when you experience abnormal noise or oscillation.
(6) Write to EEPROM when you want to save the result.

Insert the console connector to CN X6 of the driver, then turn on the driver power. → r 0

Setup of parameter, Pr21

Press (S). → dP_SPd
Press (M). → PA_ 00
Match to the parameter No. to be set up with (▲)(▼). (Here match to Pr21.) → PA_ 21
Press (S). → 1
Change the setup with (▲)(▼).
Press (S). → PA_ 21

Setup of parameter, Pr22

Match to Pr22 with (▲). → PA_ 22
Press (S). → 4 (default values)
Numeral increases with (▲), and decreases with (▼).
Press (S).

Writing to EEPROM

Press (M). → EE_SEt
Press (S). → EEP -
Bars increase as the right fig. shows by keep pressing (▲) (approx. 5sec). → EEP --
→ ------
Writing starts (temporary display). → StArt

Finish → FinISh (Writing completes) / rESEt / Error (Writing error occurs)

Return to SELECTION display after writing finishes, referring to "Structure of each mode"(P.60 and 61 of Preparation).

Parameters Which Are Automatically Set Up.

Following parameters are automatically adjusted.

PrNo.	Title
11	1st gain of velocity loop
12	1st time constant of velocity loop integration
13	1st filter of velocity detection
14	1st time constant of torque filter
19	2nd gain of velocity loop
1A	2nd time constant of velocity loop integration
1B	2nd filter of speed detection
1C	2nd time constant of torque filter
20	Inertia ratio

Also following parameters are automatically set up.

PrNo.	Title	Setup value
30	2nd gain setup	1
31	1st mode of control switching	0
32	1st delay time of control switching	30
33	1st level of control switching	50
34	1st hysteresis of control switching	33
36	2nd mode of control switching	0

<Notes>

- When the real-time auto-gain tuning is valid, you cannot change parameters which are automatically adjusted.
- Pr31 becomes 10 at position or full closed control and when Pr21 (Setup of Real-Time Auto-Gain Tuning Mode) is 1 to 6, and becomes 0 in other cases.

Cautions

(1) After the start-up, you may experience abnormal noise and oscillation right after the first Servo-ON, or when you increase the setup of Pr22 (Selection of machine stiffness at real-time auto-gain tuning), until load inertia is identified (estimated) or adaptive filter is stabilized, however, these are not failures as long as they disappear immediately. If they persist over 3 reciprocating operations, take the following measures in possible order.
   1) Write the parameters which have given the normal operation into EEPROM.
   2) Lower the setup of Pr22 (Selection of machine stiffness at real-time auto-gain tuning).
   3) Set up both Pr21 (Setup of real-time auto-gain tuning) and Pr23 (Setup of adaptive filter mode) to 0, then set up other value than 0. (Reset of inertia estimation and adaptive action)
   4) Invalidate the adaptive filter by setting up Pr23 (Setup of adaptive filter mode setup) to 0, and set up notch filter manually.

(2) When abnormal noise and oscillation occur, Pr20 (Inertia ratio) or Pr2F (Adaptive filter frequency) might have changed to extreme values. Take the same measures as the above in these cases.

(3) Among the results of real-time auto-gain tuning, Pr20 (Inertia ratio) and Pr2F (Adaptive filter frequency) will be written to EEPROM every 30 minutes. When you turn on the power again, auto-gain tuning will be executed using the latest data as initial values.

(4) When you validate the real-time auto-gain tuning, Pr27 (Setup of instantaneous speed observer) will be invalidated automatically.

(5) The adaptive filter is normally invalidated at torque control, however, when you select torque control while you set up Pr02 (Control mode setup) to 4 and 5, the adaptive filter frequency before mode switching will be held.

(6) During the trial run and frequency characteristics measurement of "PANATERM®", the load inertia estimation will be invalidated.

Parameter Setup

Parameters for Functional Selection

Standard default : < >

PrNo.	Title	Setup range	Function/Content
00 *	Address	0 to 15 <1>	In the communication with the host via RS232/485 for multi-axes application, it is necessary to identify which axis the host is communicating. Use this parameter to confirm the address of the axis in numbers.

- The address is determined by the setup value of rotary switch (0 to F) of the front panel at power-on.
- This value becomes the axis number at serial communication.
- The setup value of this parameter has no effect to the servo action.
- You cannot change the setup of Pr00 with other means than rotary switch.

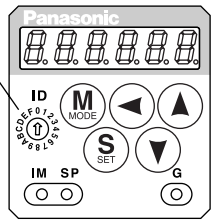

PrNo.	Title	Setup range	Function/Content
01 *	LED initial status	0 to 17 <1>	You can select the type of data to be displayed on the front panel LED (7 segment) at the initial status after power-on.

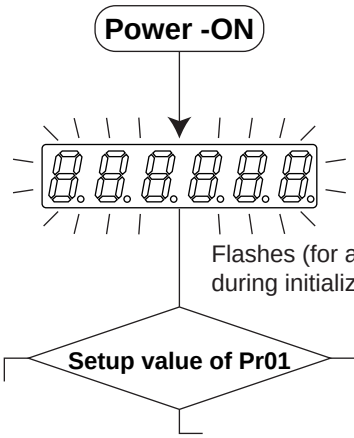

Setup value	Content
0	Positional deviation
<1>	Motor rotational speed
2	Torque output
3	Control mode
4	I/O signal status
5	Error factor/history
6	Software version
7	Alarm
8	Regenerative load factor
9	Over-load factor
10	Inertia ratio
11	Sum of feedback pulses
12	Sum of command pulses
13	External scale deviation
14	Sum of external scale feedback pulses
15	Motor automatic recognizing function
16	Analog input value
17	Factor of "No-Motor Running"

For details of display, refer to P.51 "Setup of Parameter and Mode" of Preparation.

PrNo.	Title	Setup range	Function/Content
02 *	Setup of control mode	0 to 6 <1>	You can set up the control mode to be used.

Setup value	Control mode	
	1st mode	2nd mode
0	Position	–
<1>	Velocity	–
2	Torque	–
3 **1	Position	Velocity
4 **1	Position	Torque
5 **1	Velocity	Torque
6	Full-closed	–

**1) When you set up the combination mode of 3, 4 or 5, you can select either the 1st or the 2nd with control mode switching input (C-MODE).
When C-MODE is open, the 1st mode will be selected.
When C-MODE is shorted, the 2nd mode will be selected.
Don't enter commands 10ms before/after switching.

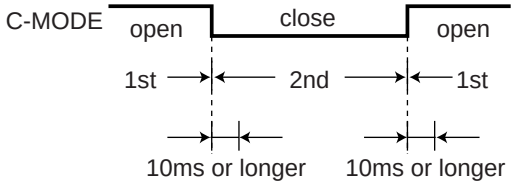

<Notes>

- For parameters which No. have a suffix of "*", changed contents will be validated when you turn on the control power.

Standard default : < >

<table>
<tr><th>PrNo.</th><th>Title</th><th>Setup range</th><th>Function/Content</th></tr>
<tr><td>04
*</td><td>Setup of over-travel inhibit input</td><td>0 to 2
<1></td><td>
In linear drive application, you can use this over-travel inhibiting function to inhibit the motor to run to the direction specified by limit switches which are installed at both ends of the axis, so that you can prevent the work load from damaging the machine due to the over-travel. With this input, you can set up the action of over-travel inhibit input.
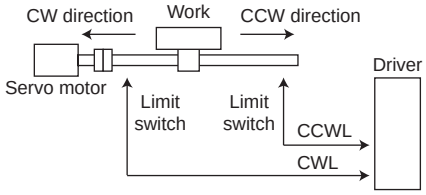

<table>
<tr><th>Setup value</th><th>CCWL/CWL input</th><th colspan="2">Input</th><th>Connection to COM–</th><th>Action</th></tr>
<tr><td rowspan="4">0</td><td rowspan="4">Valid</td><td rowspan="2">CCWL
(CN X5,Pin-9)</td><td>Close</td><td>Normal status while CCW-side limit switch is not activated.</td></tr>
<tr><td>Open</td><td>Inhibits CCW direction, permits CW direction.</td></tr>
<tr><td rowspan="2">CWL
(CN X5,Pin-9)</td><td>Close</td><td>Normal status while CW-side limit switch is not activated.</td></tr>
<tr><td>Open</td><td>Inhibits CW direction, CCW direction permitted.</td></tr>
<tr><td><1></td><td>Invalid</td><td colspan="3">Both CCWL and CWL inputs will be ignored, and over-travel inhibit function will be invalidated.</td></tr>
<tr><td>2</td><td>Valid</td><td colspan="3">Err38 (Over-travel inhibit input protection) is triggered when either one of the connection of CW or CCW inhibit input to COM– become open.</td></tr>
</table>
<Cautions>
1. When Pr04 is set to 0 and over-travel inhibit input is entered, the motor decelerates and stops according to the preset sequence with Pr66 (Sequence at over-travel inhibition). For details, refer to the explanation of Pr66.
2. When both of CCWL and CWL inputs are opened while Pr04 is set to 0, the driver trips with Err38 (Overtravel inhibit input error) judging that this is an error.
3. When you turn off the limit switch on upper side of the work at vertical axis application, the work may repeat up/down movement because of the loosing of upward torque. In this case, set up Pr66 to 2, or limit with the host controller instead of using this function.
</td></tr>
<tr><td>06</td><td>Selection of ZEROSPD input</td><td>0 to 2
<0></td><td>
You can set up the function of the speed zero clamp input (ZEROSPD : CN X5, Pin-26)
<table>
<tr><th>Setup value</th><th>Function of ZEROSPD (Pin-26)</th></tr>
<tr><td><0>, 2</td><td>ZEROSPD input is ignored and the driver judge that it Is not in speed zero clamp status.</td></tr>
<tr><td>1</td><td>ZEROSPD input becomes valid. Speed command is taken as 0 by opening the connection to COM–.</td></tr>
</table>
</td></tr>
<tr><td>07</td><td>Selection of speed monitor (SP)</td><td>0 to 9
<3></td><td>
You can set up the content of analog speed monitor signal output (SP : CN X5, Pin43) and the relation between the output voltage level and the speed.
<table>
<tr><th>Setup value</th><th>Signal of SP</th><th>Relation between the output voltage level and the speed</th></tr>
<tr><td>0</td><td rowspan="5">Motor actual speed</td><td>6V / 47 r/min</td></tr>
<tr><td>1</td><td>6V / 188 r/min</td></tr>
<tr><td>2</td><td>6V / 750 r/min</td></tr>
<tr><td><3></td><td>6V / 3000 r/min</td></tr>
<tr><td>4</td><td>1.5V / 3000 r/min</td></tr>
<tr><td>5</td><td rowspan="5">Command speed</td><td>6V / 47 r/min</td></tr>
<tr><td>6</td><td>6V / 188 r/min</td></tr>
<tr><td>7</td><td>6V / 750 r/min</td></tr>
<tr><td>8</td><td>6V / 3000 r/min</td></tr>
<tr><td>9</td><td>1.5V / 3000 r/min</td></tr>
</table>
</td></tr>
</table>

Parameter Setup

Standard default : < >

<table>
<tr><th>PrNo.</th><th>Title</th><th>Setup range</th><th>Function/Content</th></tr>
<tr><td>08</td><td>Selection of torque monitor (IM)</td><td>0 to 12
<0></td><td>You can set up the content of the analog torque monitor of the signal output (IM : CN X5, Pin-42), and the relation between the output voltage level and torque or deviation pulse counts.
<table>
<tr><th>Setup value</th><th>Signal of IM</th><th>Relation between the output voltage level and torque or deviation pulse counts</th></tr>
<tr><td><0></td><td>Torque command</td><td>3V/rated (100%) torque</td></tr>
<tr><td>1</td><td rowspan="5">Position deviation</td><td>3V / 31Pulse</td></tr>
<tr><td>2</td><td>3V / 125Pulse</td></tr>
<tr><td>3</td><td>3V / 500Pulse</td></tr>
<tr><td>4</td><td>3V / 2000Pulse</td></tr>
<tr><td>5</td><td>3V / 8000Pulse</td></tr>
<tr><td>6</td><td rowspan="5">Full-closed deviation</td><td>3V / 31Pulse</td></tr>
<tr><td>7</td><td>3V / 125Pulse</td></tr>
<tr><td>8</td><td>3V / 500Pulse</td></tr>
<tr><td>9</td><td>3V / 2000Pulse</td></tr>
<tr><td>10</td><td>3V / 8000Pulse</td></tr>
<tr><td>11</td><td rowspan="2">Torque command</td><td>3V / 200% torque</td></tr>
<tr><td>12</td><td>3V / 400% torque</td></tr>
</table></td></tr>
<tr><td>09</td><td>Selection of TLC output</td><td>0 to 8
<0></td><td>You can assign the function of the torque in-limit output (TLC : CN X5 Pin-40).
<table>
<tr><th>Setup value</th><th>Function</th><th>Note</th></tr>
<tr><td><0></td><td>Torque in-limit output</td><td rowspan="9">For details of function of each output of the left, refer to the table of P168, "Selection of TCL and ZSP outputs".</td></tr>
<tr><td>1</td><td>Zero speed detection output</td></tr>
<tr><td>2</td><td>Alarm output of either one of Over-regeneration /Over-load/Absolute battery/Fan lock/External scale</td></tr>
<tr><td>3</td><td>Over-regeneration alarm trigger output</td></tr>
<tr><td>4</td><td>Overload alarm output</td></tr>
<tr><td>5</td><td>Absolute battery alarm output</td></tr>
<tr><td>6</td><td>Fan lock alarm output</td></tr>
<tr><td>7</td><td>External scale alarm output</td></tr>
<tr><td>8</td><td>In-speed (Speed coincidence) output</td></tr>
</table></td></tr>
<tr><td>0A</td><td>Selection of ZSP output</td><td>0 to 8
<1></td><td>You can assign the function of the zero speed detection output (ZSP: CN X5 Pin-12).
<table>
<tr><th>Setup value</th><th>Function</th><th>Note</th></tr>
<tr><td>0</td><td>Torque in-limit output</td><td rowspan="9">For details of function of each output of the left, refer to the table of P.168, "Selection of TCL and ZSP outputs".</td></tr>
<tr><td><1></td><td>Zero speed detection output</td></tr>
<tr><td>2</td><td>Alarm output of either one of Over-regeneration /Over-load/Absolute battery/Fan lock/External scale</td></tr>
<tr><td>3</td><td>Over-regeneration alarm trigger output</td></tr>
<tr><td>4</td><td>Overload alarm output</td></tr>
<tr><td>5</td><td>Absolute battery alarm output</td></tr>
<tr><td>6</td><td>Fan lock alarm output</td></tr>
<tr><td>7</td><td>External scale alarm output</td></tr>
<tr><td>8</td><td>In-speed (Speed coincidence) output</td></tr>
</table></td></tr>
<tr><td>0B
*</td><td>Setup of absolute encoder</td><td>0 to 2
<1></td><td>You can set up the using method of 17-bit absolute encoder.
<table>
<tr><th>Setup value</th><th>Content</th></tr>
<tr><td>0</td><td>Use as an absolute encoder.</td></tr>
<tr><td><1></td><td>Use as an incremental encoder.</td></tr>
<tr><td>2</td><td>Use as an absolute encoder, but ignore the multi-turn counter over.</td></tr>
</table>
<Caution>
This parameter will be invalidated when 5-wire, 2500P/r incremental encoder is used.</td></tr>
<tr><td>0C
*</td><td>Baud rate setup of RS232 communication</td><td>0 to 5
<2></td><td>You can set up the communication speed of RS232.
• Error of baud rate is ±0.5%.
<table>
<tr><th>Setup value</th><th>Baud rate</th></tr>
<tr><td>0</td><td>2400bps</td></tr>
<tr><td>1</td><td>4800bps</td></tr>
<tr><td><2></td><td>9600bps</td></tr>
</table>
<table>
<tr><th>Setup value</th><th>Baud rate</th></tr>
<tr><td>3</td><td>19200bps</td></tr>
<tr><td>4</td><td>38400bps</td></tr>
<tr><td>5</td><td>57600bps</td></tr>
</table></td></tr>
</table>

Standard default : < >

<table>
<tr><th>PrNo.</th><th>Title</th><th>Setup range</th><th>Function/Content</th></tr>
<tr><td>0D
*</td><td>Baud rate setup of RS485 communication</td><td>0 to 5
<2></td><td>You can set up the communication speed of RS485.
• Error of baud rate is ±0.5%.
<table>
<tr><th>Setup value</th><th>Baud rate</th></tr>
<tr><td>0</td><td>2400bps</td></tr>
<tr><td>1</td><td>4800bps</td></tr>
<tr><td><2></td><td>9600bps</td></tr>
</table>
<table>
<tr><th>Setup value</th><th>Baud rate</th></tr>
<tr><td>3</td><td>19200bps</td></tr>
<tr><td>4</td><td>38400bps</td></tr>
<tr><td>5</td><td>57600bps</td></tr>
</table></td></tr>
<tr><td>0E
*</td><td>Setup of front panel lock</td><td>0 to 1
<0></td><td>You can limit the operation of the front panel to the monitor mode only.
You can prevent such a misoperation as unexpected parameter change.
<table>
<tr><th>Setup value</th><th>Content</th></tr>
<tr><td><0></td><td>Valid to all</td></tr>
<tr><td>1</td><td>Monitor mode only</td></tr>
</table>
<Note>
You can still change parameters via communication even though this setup is 1.
To return this parameter to 0, use the console or the "PANATERM®".</td></tr>
</table>

Parameters for Adjustment of Time Constants of Gains and Filters

Standard default : < >

PrNo.	Title	Setup range	Unit	Function/Content
11	1st gain of velocity loop	1 to 3500 A to C-frame:<35>* D to F-frame:<18>*	Hz	You can determine the response of the velocity loop. In order to increase the response of overall servo system by setting high position loop gain, you need higher setup of this velocity loop gain as well. However, too high setup may cause oscillation. **<Caution>** When the inertia ratio of Pr20 is set correctly, the setup unit of Pr11 becomes (Hz).
12	1st time constant of velocity loop integration	1 to 1000 A to C-frame:<16>* D to F-frame:<31>*	ms	You can set up the integration time constant of velocity loop. Smaller the setup, faster you can dog-in deviation at stall to 0. The integration will be maintained by setting to "999". The integration effect will be lost by setting to "1000".
13	1st filter of speed detection	0 to 5 <0>*	–	You can set up the time constant of the low pass filter (LPF) after the speed detection, in 6 steps. Higher the setup, larger the time constant you can obtain so that you can decrease the motor noise, however, response becomes slow. Use with a default value of 0 in normal operation.
14	1st time constant of torque filter	0 to 2500 A to C-frame:<65>* D to F-frame:<126>*	0.01ms	You can set up the time constant of the 1st delay filter inserted in the torque command portion. You might expect suppression of oscillation caused by distortion resonance.
19	2nd gain of velocity loop	1 to 3500 A to C-frame:<35>* D to F-frame:<18>*	Hz	Position loop, velocity loop, speed detection filter and torque command filter have their 2 pairs of gain or time constant (1st and 2nd). For details of switching the 1st and the 2nd gain or the time constant, refer to P.226, "Adjustment". The function and the content of each parameter is as same as that of the 1st gain and time constant.
1A	2nd time constant of velocity loop integration	1 to 1000 <1000>*	ms	
1B	2nd filter of velocity detection	0 to 5 <0>*	–	
1C	2nd time constant of torque filter	0 to 2500 A to C-frame:<65>* D to F-frame:<126>*	0.01ms	
1D	1st notch frequency	100 to 1500 <1500>	Hz	You can set up the frequency of the 1st resonance suppressing notch filter. The notch filter function will be invalidated by setting up this parameter to "1500".

<Notes>

- For parameters which No. have a suffix of "*", changed contents will be validated when you turn on the control power.
- Parameters which default values have a suffix of "*" will be automatically set up during real time auto-gain tuning. When you change manually, invalidate the real-time auto-gain tuning first then set, referring to P.239, "Release of Automatic Gain Adjusting Function" of Adjustment.

Standard default : < >

PrNo.	Title	Setup range	Unit	Function/Content
1E	1st notch width selection	0 to 4 <2>	–	You can set up the notch filter width of the 1st resonance suppressing filter in 5 steps. Higher the setup, larger the notch width you can obtain. Use with default setup in normal operation.

Parameters for Auto-Gain Tuning

Standard default : < >

PrNo.	Title	Setup range	Unit	Function/Content
20	Inertia ratio	0 to 10000 <250> *	%	You can set up the ratio of the load inertia against the rotor (of the motor) inertia. Pr20= (load inertia/rotor inertia) X 100 [%] When you execute the normal auto-gain tuning, the load inertial will be automatically estimated after the preset action, and this result will be reflected in this parameter. The inertia ratio will be estimated at all time while the real-time auto-gain tuning is valid, and its result will be saved to EEPROM every 30 min. **<Caution>** If the inertia ratio is correctly set, the setup unit of Pr11 and Pr19 becomes (Hz). When the inertia ratio of Pr20 is larger than the actual, the setup unit of the velocity loop gain becomes larger, and when the inertia ratio of Pr20 is smaller than the actual, the setup unit of the velocity loop gain becomes smaller.
21	Setup of real-time auto-gain tuning	0 to 7 <1>	–	You can set up the action mode of the real-time auto-gain tuning. With higher setup such as 3, the driver respond quickly to the change of the inertia during operation, however it might cause an unstable operation. Use 1for normal operation.
22	Selection of machine stiffness at real-time auto-gain tuning	0 to 15 A to C-frame: <4> D to F-frame: <1>	–	You can set up the machine stiffness in 16 steps while the real-time auto-gain tuning is valid. low ← machine stiffness → high low ← servo gain → high Pr22 | 0, 1- - - - - - - - - - - - 14, 15 low ← response → high **<Caution>** When you change the setup value rapidly, the gain changes rapidly as well, and this may give impact to the machine. Increase the setup gradually watching the movement of the machine.

Setup value	Real-time auto-gain tuning	Varying degree of load inertia in motion
0	Invalid	–
<1>, 4, 7	Normal mode	Little change
2, 5		Gradual change
3, 6		Rapid change

Standard default : < >

<table>
<tr><th>PrNo.</th><th>Title</th><th>Setup range</th><th>Unit</th><th>Function/Content</th></tr>
<tr><td>25</td><td>Setup of an action at normal mode auto-gain tuning</td><td>0 to 7
<0></td><td>–</td><td>You can set up the action pattern at the normal mode auto-gain tuning.
<table>
<tr><th>Setup value</th><th>Number of revolution</th><th>Rotational direction</th></tr>
<tr><td><0></td><td rowspan="4">2 [revolution]</td><td>CCW → CW</td></tr>
<tr><td>1</td><td>CW → CCW</td></tr>
<tr><td>2</td><td>CCW → CCW</td></tr>
<tr><td>3</td><td>CW → CW</td></tr>
<tr><td>4</td><td rowspan="4">1 [revolution]</td><td>CCW → CW</td></tr>
<tr><td>5</td><td>CW → CCW</td></tr>
<tr><td>6</td><td>CCW → CCW</td></tr>
<tr><td>7</td><td>CW → CW</td></tr>
</table>
e.g.) When the setup is 0, the motor turns 2 revolutions to CCW and 2 revolutions to CW.</td></tr>
<tr><td>28</td><td>2nd notch frequency</td><td>100 to 1500
<1500></td><td>Hz</td><td>You can set up the 2nd notch width of the resonance suppressing filter in 5 steps. The notch filter function is invalidated by setting up this parameter to "1500".</td></tr>
<tr><td>29</td><td>Selection of 2nd notch width</td><td>0 to 4
<2></td><td>–</td><td>You can set up the notch width of 2nd resonance suppressing filter in 5 steps. Higher the setup, larger the notch width you can obtain.
Use with default setup in normal operation.</td></tr>
<tr><td>2A</td><td>Selection of 2nd notch depth</td><td>0 to 99
<0></td><td>–</td><td>You can set up the 2nd notch depth of the resonance suppressing filter. Higher the setup, shallower the notch depth and smaller the phase delay you can obtain.</td></tr>
</table>

Parameters for Adjustment (2nd Gain Switching Function)

Standard default : < >

<table>
<tr><th>PrNo.</th><th>Title</th><th>Setup range</th><th>Unit</th><th>Function/Content</th></tr>
<tr><td>30</td><td>Setup of 2nd gain</td><td>0 to 1
<1>*</td><td>–</td><td>You can select the PI/P action switching of the velocity control or 1st/2nd gain switching.
<table>
<tr><th>Setup value</th><th>Gain selection/switching</th></tr>
<tr><td>0</td><td>1st gain (PI/P switching enabled) *1</td></tr>
<tr><td><1>*</td><td>1st/2nd gain switching enabled *2</td></tr>
</table>
*1 Switch the PI/P action with the gain switching input (GAIN CN X5, Pin-27). PI is fixed when Pr03 (Torque limit selection) is 3.
<table>
<tr><th>GAIN input</th><th>Action of velocity loop</th></tr>
<tr><td>Open with COM–</td><td>PI action</td></tr>
<tr><td>Connect to COM–</td><td>P action</td></tr>
</table>
*2 For switching condition of the 1st and the 2nd, refer to P.243, "Gain Switching Function" of Adjustment.</td></tr>
<tr><td>31</td><td>1st mode of control switching</td><td>0 to 10
<0>*</td><td>–</td><td>You can select the switching condition of 1st gain and 2nd gain while Pr30 is set to 1.
<table>
<tr><th>Setup value</th><th>Gain switching condition</th></tr>
<tr><td><0>*, 4to 10</td><td>Fixed to the 1st gain.</td></tr>
<tr><td>1</td><td>Fixed to the 2nd gain.</td></tr>
<tr><td>2 *1</td><td>2nd gain selection when the gain switching input is turned on. (Pr30 setup must be 1.)</td></tr>
<tr><td>3 *2</td><td>2nd gain selection when the toque command variation is larger than the setups of Pr33 (1st level of control switching) and Pr34 (1st hysteresis of control switching).</td></tr>
</table>
*1 Fixed to the 1st gain regardless of GAIN input, when Pr31 is set to 2 and Pr03 (Torque limit selection) is set to 3.
*2 For the switching level and the timing, refer to P.243, "Gain Switching Function" of Adjustment.</td></tr>
</table>

<Notes>

- Parameters which default values have a suffix of "*" will be automatically set up during real time auto-gain tuning. When you change manually, invalidate the real-time auto-gain tuning first then set, referring to P.239, "Release of Automatic Gain Adjusting Function" of Adjustment.

Parameter Setup

Standard default : < >

PrNo.	Title	Setup range	Unit	Function/Content
32	1st delay time of control switching	0 to 10000 <30>*	x 166μs	You can set up the delay time when returning from the 2nd to the 1st gain, while Pr31 is set to 3.
33	1st level of control switching	0 to 20000 <50>*	–	You can set up the switching (judging) level of the 1st and the 2nd gains, while Pr31 is set to 3. Unit varies depending on the setup of Pr31 (1st mode of control switching)
34	1st hysteresis of control switching	0 to 20000 <33>*	–	You can set up hysteresis width to be implemented above/below the judging level which is set up with Pr33. Unit varies depending on the setup of Pr31 (1st control switching mode). Definitions of Pr32 (Delay), Pr33 (Level) and Pr34 (Hysteresis) are explained in the fig. below. 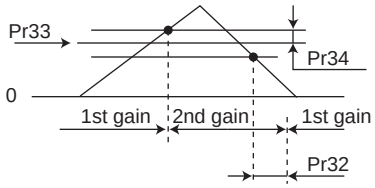 **<Caution>** The setup of Pr33 (Level) and Pr34 (Hysteresis) are valid as absolute values (positive/negative).
35	Switching time of position gain	0 to 10000 <20>*	(setup value + 1) x 166μs	You can setup the step-by-step switching time to the position loop gain only at gain switching while the 1st and the 2nd gain switching is valid. 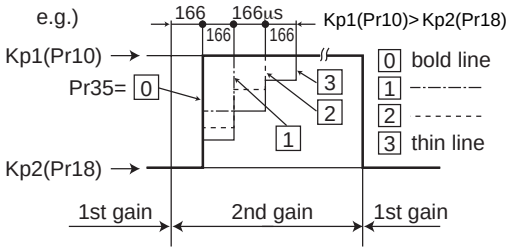 **<Caution>** The switching time is only valid when switching from small position gain to large position gain.
37	2nd delay time of control switching	0 to 10000 <0>	x 166μs	You can set up the delay time when returning from 2nd to 1st gain, while Pr36 is set to 3 to 5.
38	2nd level of control switching	0 to 20000 <0>	–	You can set up the switching (judging) level of the 1st and the 2nd gains, while Pr36 is set to 3 to 5 Unit varies depending on the setup of Pr36 (2nd mode of control switching).
39	2nd hysteresis of control switching	0 to 20000 <0>	–	You can set up the hysteresis width to be implemented above/below the judging level which is set up with Pr38. Unit varies depending on the setup of Pr36 (2nd mode of control switching).Definition of Pr37 (Delay), Pr38 (Level) and Pr39 (Hysteresis) are explained in the fig. below. 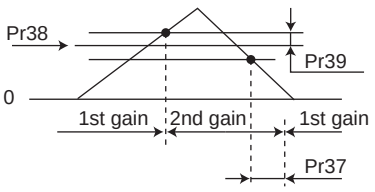 **<Caution>** Setup of Pr38 (Level) and Pr39 (Hysteresis) are valid as absolute value (positive/negative).
3D	JOG speed setup	0 to 500 <300>	r/min	You can setup the JOG speed. Refer to P.75, "Trial Run"of Preparation.

Parameters for Position Control

Standard default : < >

<table>
<tr><th>PrNo.</th><th>Title</th><th>Setup range</th><th>Function/Content</th></tr>
<tr><td>44
*</td><td>Numerator of pulse output division</td><td>1 to 32767
<2500></td><td rowspan="2">You can set up the pulse counts to be fed out from the pulse output (X5 0A+ : Pin-21, 0A- : Pin-22, 0B+ : Pin-48, 0B- : Pin-49).
• Pr45= <0> (Default)
You can set up the output pulse counts per one motor revolution for each OA and OB with the Pr44 setup. Therefore the pulse output resolution after quadruple can be obtained from the formula below.
The pulse output resolution per one revolution
= Pr44 (Numerator of pulse output division) X4
• Pr45≠0 :
The pulse output resolution per one revolution can be divided by any ration according to the formula below.
Pulse output resolution per one revolution $\frac{\text{Pr44 (Numerator of pulse output division)}}{\text{Pr45 (Denominator of pulse output division)}}$ x Encoder resolution
<Cautions>
• The encoder resolution is 131072 [P/r] for the 17-bit absolute encoder, and 10000 [P/r] for the 5-wire 2500P/r incremental encoder.
• The pulse output resolution per one revolution cannot be greater than the encoder resolution.
(In the above setup, the pulse output resolution equals to the encoder resolution.)
• Z-phase is fed out once per one revolution of the motor.
When the pulse output resolution obtained from the above formula is multiple of 4, Z-phase synchronizes with A-phase. In other case, the Z-phase width equals to output with the encoder resolution, and becomes narrower than A-phase, hence does not synchronize with A-phase.
when encoder resolution x $\frac{\text{Pr44}}{\text{Pr45}}$ is multiple of 4
 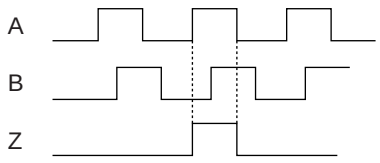

Synchronized
when encoder resolution x $\frac{\text{Pr44}}{\text{Pr45}}$ is not multiple of 4
 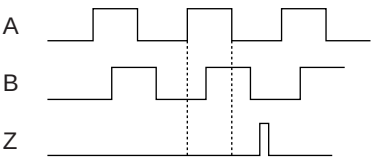

Not-synchronized</td></tr>
<tr><td>45
*</td><td>Denominator of pulse output division</td><td>0 to 32767
<0></td></tr>
</table>

<Notes>

- For parameters which No. have a suffix of "*", changed contents will be validated when you turn on the control power.
- Parameters which default values have a suffix of "*" will be automatically set up during real time auto-gain tuning. When you change manually, invalidate the real-time auto-gain tuning first then set, referring to P.239, "Release of Automatic Gain Adjusting Function" of Adjustment.

Parameter Setup

Standard default : < >

<table>
<tr><th>PrNo.</th><th>Title</th><th>Setup range</th><th>Function/Content</th></tr>
<tr><td>46
*</td><td>Reversal of pulse output logic</td><td>0 to 3
<0></td><td>You can set up the B-phase logic and the output source of the pulse output (X5 OB+ : Pin-48, OB– : Pin-49). With this parameter, you can reverse the phase relation between the A-phase pulse and the B-phase pulse by reversing the B-phase logic.
<table>
<tr><th>Setup value</th><th>A-phase (OA)</th><th>at motor CCW rotation</th><th>at motor CW rotation</th></tr>
<tr><td><0>, 2</td><td>B-phase(OB) non-reversal</td><td> 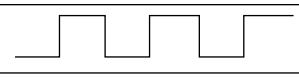 </td><td> 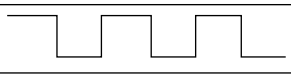 </td></tr>
<tr><td>1, 3</td><td>B-phase(OB) reversal</td><td> 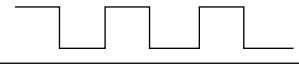 </td><td> 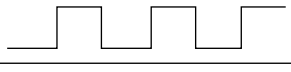 </td></tr>
</table>
<table>
<tr><th>Pr46</th><th>B-phase logic</th><th>Output source</th></tr>
<tr><td><0></td><td>Non-reversal</td><td>Encoder position</td></tr>
<tr><td>1</td><td>Reversal</td><td>Encoder position</td></tr>
<tr><td>2 *1</td><td>Non-reversal</td><td>External scale position</td></tr>
<tr><td>3 *1</td><td>Reversal</td><td>External scale position</td></tr>
</table>
*1 The output source of Pr46= 2, 3 is valid only at full-closed control.</td></tr>
</table>

<Notes>

- For parameters which No. have a suffix of "*", changed contents will be validated when you turn on the control power.

Parameters for Velocity and Torque Control

Standard default : < >

PrNo.	Title	Setup range	Unit	Function/Content
50	Input gain of speed command	10 to 2000 <500>	(r/min)/V	You can set up the relation between the voltage applied to the speed command input (SPR : CN X5, Pin-14) and the motor speed. • You can set up a "slope" of the relation between the command input voltage and the motor speed, with Pr50. • Default is set to Pr50=500 [r/min] , hence input of 6V becomes 3000r/min. **<Cautions>** 1. Do not apply more than ±10V to the speed command input (SPR). 2. When you compose a position loop outside of the driver while you use the driver in velocity control mode, the setup of Pr50 gives larger variance to the overall servo system. Pay an extra attention to oscillation caused by larger setup of Pr50. 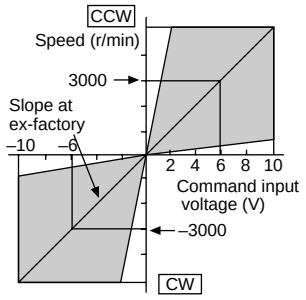
52	Speed command offset	–2047 to 2047 <0>	0.3mV	• You can make an offset adjustment of analog speed command (SPR : CN X5, Pin-14) with this parameter. • The offset volume is 0.3mV per setup value of "1". • There are 2 offset methods, (1) Manual adjustment and (2) Automatic adjustment. 1) Manual adjustment • When you make an offset adjustment with the driver alone, Enter 0 V exactly to the speed command input (SPR/TRQR), (or connect to the signal ground), then set this parameter up so that the motor may not turn. • when you compose a position loop with the host, • Set this parameter up so that the deviation pulse may be reduced to 0 at the Servo-Lock status. 2) Automatic adjustment • For the details of operation method at automatic offset adjustment mode, refer to P.73, "Auxiliary Function Mode" of Preparation. • Result after the execution of the automatic offset function will be reflected in this parameter, Pr52.
56	4th speed of speed setup	–20000 to 20000 <0>	r/min	You can set up the speed limit value in unit of [r/min] . **<Caution>** The absolute value of the parameter setup is limited by Pr73 (Set up of over-speed level).
57	Setup of speed command filter	0 to 6400 <0>	10μs	You can set up the time constant of the primary delay filter to the analog speed command/analog torque command/analog velocity control (SPR : CN X5, Pin-14)
5B	Selection of torque command	0 to 1 <0>	–	You can select the input of the torque command and the speed limit.

Pr5B	Torque command	Velocity limit
<0>	SPR/TRQR/SPL	Pr56
1	CCWTL/TRQR	SPR/TRQR/SPL

Parameter Setup

Standard default : < >

PrNo.	Title	Setup range	Unit	Function/Content
5C	Input gain of torque command	10 to 100 <30>	0.1V/ 100%	You can set the relation between the voltage applied to the torque command input (SPR/TRQR : CN X5, Pin-14 or CCWTL/TRQR : CN X5, Pin-16) and the motor output torque. • Unit of the setup value is [0.1V/100%] and set up input voltage necessary to produce the rated torque. • Default setup of 30 represents 3V/100%. 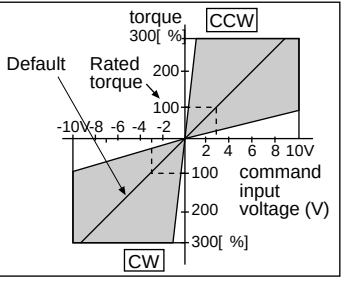
5D	Input reversal of torque command	0 to 1 <0>	–	You can reverse the polarity of the torque command input (SPR/TRQR : CN X5, Pin-14 or CCWTL/TRQR : CN X5, Pin-16) **Setup value** / **Direction of motor output torque** <0> / CCW direction (viewed from motor shaft) with (+) command 1 / CW direction (viewed from motor shaft) with (+) command
5E	1st torque limit setup	0 to 500 <500> *2	%	You can limit the max torque for both CCW and CW direction with Pr5E. Pr03 setup and Pr5F are ignored. This torque limit function limits the max. motor torque with the parameter setup. In normal operation, this driver permits approx. 3 times larger torque than the rated torque instantaneously. If this 3 times bigger torque causes any trouble to the load (machine) strength, you can use this function to limit the max. torque. • Setup value is to be given in % against the rated torque. • Right fig. shows example of 150% setup with Pr03=1. • Pr5E limits the max. torque for both CCW and CW directions. 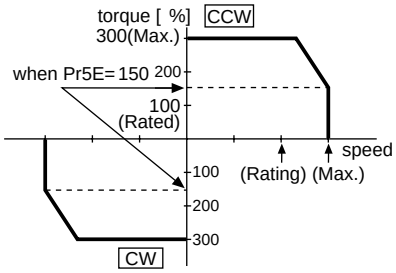 **<Caution>** You cannot set up a larger value to this parameter than the default setup value of "Max. output torque setup" of System parameter (which you cannot change through operation with PANATERM® or panel). Default value varies depending on the combination of the motor and the driver. For details, refer to P.57, "Setup of Torque Limit " of Preparation.

<Notes>

• For parameters which default. has a suffix of "*2", value varies depending on the combination of the driver and the motor.

Parameters for Sequence

Standard default : < >

PrNo.	Title	Setup range	Unit	Function/Content
61	Zero-speed	10 to 20000 <50>	r/min	You can set up the timing to feed out the zero-speed detection output signal (ZSP : CN X5, Pin-12 or TCL : CN X5, Pin-40) in rotational speed [r/min] . The zero-speed detection signal (ZSP) will be fed out when the motor speed falls below the setup of this parameter, Pr61. In-speed (Speed coincidence) signal (V-COIN) will be fed out when the difference between the speed command and the motor speed falls below the setup of this parameter, Pr61. • The setup of P61 is valid for both CCW and CW direction regardless of the motor rotating direction. • There is hysteresis of 10 [r/min] . 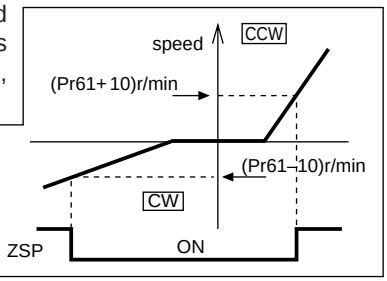
62	At-speed (Speed arrival)	10 to 20000 <50>	r/min	You can set up the timing to feed out the At-speed signal (COIN+ : CN X5, Pin-39, COIN- : CN X5, Pin-38) At-speed (Speed arrival) (COIN) will be fed out when the motor speed exceeds the setup speed of this parameter, Pr62 • The setup of P62 is valid for both CCW and CW direction regardless of the motor rotational direction. • There is hysteresis of 10 [r/min] . 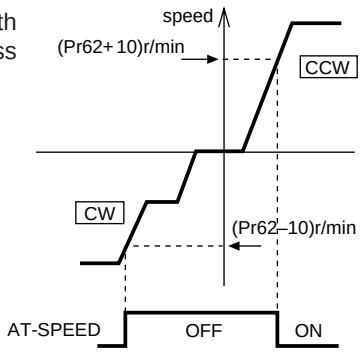
65	LV trip selection at main power OFF	0 to 1 <1>	–	You can select whether or not to activate Err13 (Main power under-voltage protection) function while the main power shutoff continues for the setup of Pr6D (Main power-OFF detection time). **Setup value** / **Action of main power low voltage protection** 0 — When the main power is shut off during Servo-ON, Err13 will not be triggered and the driver turns to Servo-OFF. The driver returns to Servo-ON again after the main power resumption. <1> — When the main power is shut off during Servo-ON, the driver will trip due to Err13 (Main power low voltage protection). **<Caution>** This parameter is invalid when Pr6D (Detection time of main power OFF)=1000. Err13 (Main power under-voltage protection) is triggered when setup of P66D is long and P-N voltage of the main converter falls below the specified value before detecting the main power shutoff, regardless of the Pr65 setup. Refer to P.42, "Timing Chart-At Power-ON" of Preparation as well.

Standard default : < >

<table>
<tr><th>PrNo.</th><th>Title</th><th>Setup range</th><th>Unit</th><th>Function/Content</th></tr>
<tr><td>66
*</td><td>Sequence at over-travel inhibit</td><td>0 to 2
<0></td><td>–</td><td>You can set up the running condition during deceleration or after stalling, while over-travel inhibit input (CCWL : Connector CN X5, Pin-9 or CWL : Connector CN X5, Pin-8) is valid
<table>
<tr><th>Setup value</th><th>During deceleration</th><th>After stalling</th><th>Deviation counter content</th></tr>
<tr><td><0></td><td>Dynamic brake action</td><td>Torque command=0 towards inhibited direction</td><td>Hold</td></tr>
<tr><td>1</td><td>Torque command=0 towards inhibited direction</td><td>Torque command=0 towards inhibited direction</td><td>Hold</td></tr>
<tr><td>2</td><td>Emergency stop</td><td>Torque command=0 towards inhibited direction</td><td>Clears before/ after deceleration</td></tr>
</table>
<Caution>
In case of the setup value of 2, torque limit during deceleration will be limited by the setup value of Pr6E (Torque setup at emergency stop).</td></tr>
<tr><td>67</td><td>Sequence at main power OFF</td><td>0 to 9
<0></td><td>–</td><td>When Pr65 (LV trip selection at main power OFF) is 0, you can set up,
1) the action during deceleration and after stalling
2) the clearing of deviation counter content
after the main power is shut off.
<table>
<tr><th rowspan="2">Setup value</th><th colspan="2">Action</th><th rowspan="2">Deviation counter content</th></tr>
<tr><th>During deceleration</th><th>After stalling</th></tr>
<tr><td><0></td><td>DB</td><td>DB</td><td>Clear</td></tr>
<tr><td>1</td><td>Free-run</td><td>DB</td><td>Clear</td></tr>
<tr><td>2</td><td>DB</td><td>Free-run</td><td>Clear</td></tr>
<tr><td>3</td><td>Free-run</td><td>Free-run</td><td>Clear</td></tr>
<tr><td>4</td><td>DB</td><td>DB</td><td>Hold</td></tr>
<tr><td>5</td><td>Free-run</td><td>DB</td><td>Hold</td></tr>
<tr><td>6</td><td>DB</td><td>Free-run</td><td>Hold</td></tr>
<tr><td>7</td><td>Free-run</td><td>Free-run</td><td>Hold</td></tr>
<tr><td>8</td><td>Emergency stop</td><td>DB</td><td>Clear</td></tr>
<tr><td>9</td><td>Emergency stop</td><td>Free-run</td><td>Clear</td></tr>
</table>
(DB: Dynamic Brake action)
<Caution>
In case of the setup value of 8 or 9, torque limit during deceleration will be limited by the setup value of Pr6E (Torque setup at emergency stop).</td></tr>
<tr><td>68</td><td>Sequence at alarm</td><td>0 to 3
<0></td><td>–</td><td>You can set up the action during deceleration or after stalling when some error occurs while either one of the protective functions of the driver is triggered.
<table>
<tr><th rowspan="2">Setup value</th><th colspan="2">Action</th><th rowspan="2">Deviation counter content</th></tr>
<tr><th>During deceleration</th><th>After stalling</th></tr>
<tr><td><0></td><td>DB</td><td>DB</td><td>Hold</td></tr>
<tr><td>1</td><td>Free-run</td><td>DB</td><td>Hold</td></tr>
<tr><td>2</td><td>DB</td><td>Free-run</td><td>Hold</td></tr>
<tr><td>3</td><td>Free-run</td><td>Free-run</td><td>Hold</td></tr>
</table>
(DB: Dynamic Brake action)
<Caution>
The content of the deviation counter will be cleared when clearing the alarm. Refer to P.43, "Timing Chart (When an error (alarm) occurs (at Servo-ON command status)" of Preparation.</td></tr>
</table>

<Notes>

- For parameters which No. have a suffix of "*", changed contents will be validated when you turn on the control power.

Standard default : < >

PrNo.	Title	Setup range	Unit	Function/Content
69	Sequence at Servo-Off	0 to 9 <0>	–	You can set up, 1) the action during deceleration and after stalling 2) the clearing of deviation counter content, after turning to Servo-OFF (SRV-ON signal : CN X5, Pin-29 is turned from ON to OFF) The relation between the setup value of Pr69 and the action/deviation counter clearance is same as that of Pr67 (Sequence at Main Power Off) Refer to P.44, "Timing Chart"-Servo-ON/OFF action while the motor is at stall" of Preparation as well.
6A	Setup of mechanical brake action at stalling	0 to 100 <0>	2ms	You can set up the time from when the brake release signal (BRK-OFF : CN X5, Pin-10 and 11) turns off to when the motor is de-energized (Servo-free), when the motor turns to Servo-OFF while the motor is at stall. • Set up to prevent a micro-travel/ drop of the motor (work) due to the action delay time (tb) of the brake • After setting up Pr6a ≧ tb, then compose the sequence so as the driver turns to Servo-OFF after the brake is actually activated. 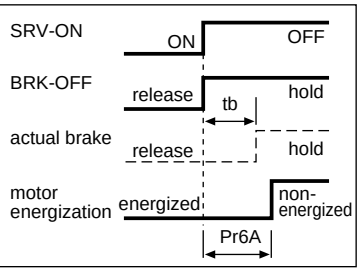 Refer to P.44, "Timing Chart"-Servo-ON/OFF Action While the Motor Is at Stall" of Preparation as well.
6B	Setup of mechanical brake action at running	0 to 100 <0>	2ms	You can set up time from when detecting the off of Servo-ON input signal (SRV-ON : CN X5, Pin-29) is to when external brake release signal (BRK-OFF : CN X5, Pin-10 and 11) turns off, while the motor turns to servo off during the motor in motion. • Set up to prevent the brake deterioration due to the motor running. • At Servo-OFF during the motor is running, tb of the right fig. will be a shorter one of either Pr6B setup time, or time lapse till the motor speed falls below 30r/min. 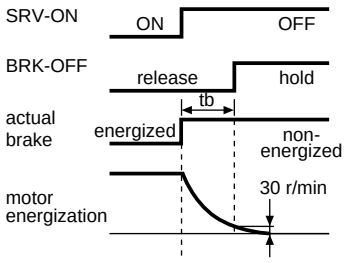 Refer to P.45, "Timing Chart"-Servo-ON/OFF action while the motor is in motion" of Preparation as well.

Standard default : < >

<table>
<tr><th>PrNo.</th><th>Title</th><th>Setup range</th><th>Unit</th><th>Function/Content</th></tr>
<tr><td>6C
*</td><td>Selection of external regenerative resistor</td><td>0 to 3
for
A, B-frame
<3>
for
C to F-frame
<0></td><td>–</td><td>With this parameter, you can select either to use the built-in regenerative resistor of the driver, or to separate this built-in regenerative resistor and externally install the regenerative resistor (between RB1 and RB2 of Connector CN X2 in case of A to D-frame, between P and B2 of terminal block in case of E, F-frame).
<table>
<tr><th>Setup value</th><th>Regenerative resistor to be used</th><th>Regenerative processing and regenerative resistor overload</th></tr>
<tr><td><0>
(C, D, E and F-frame)</td><td>Built-in resistor</td><td>Regenerative processing circuit will be activated and regenerative resistor overload protection will be triggered according to the built-in resistor (approx. 1% duty).</td></tr>
<tr><td>1</td><td>External resistor</td><td>The driver trips due to regenerative overload protection (Err18), when regenerative processing circuit is activated and its active ratio exceeds 10%,</td></tr>
<tr><td>2</td><td>External resistor</td><td>Regenerative processing circuit is activated, but no regenerative over-load protection is triggered.</td></tr>
<tr><td><3>
(A, B-frame)</td><td>No resistor</td><td>Both regenerative processing circuit and regenerative protection are not activated, and built-in capacitor handles all regenerative power.</td></tr>
</table>
<Remarks>
Install an external protection such as thermal fuse when you use the external regenerative resistor.
Otherwise, the regenerative resistor might be heated up abnormally and result in burnout, regardless of validation or invalidation of regenerative over-load protection.
<Caution>
When you use the built-in regenerative resistor, never to set up other value than 0. Don't touch the external regenerative resistor.
External regenerative resistor gets very hot, and might cause burning.</td></tr>
<tr><td>6D
*</td><td>Detection time of main power off</td><td>35 to 1000
<35></td><td>2ms</td><td>You can set up the time to detect the shutoff while the main power is kept shut off continuously.
The main power off detection is invalid when you set up this to 1000.</td></tr>
<tr><td>6E</td><td>Torque setup at emergency stop</td><td>0 to 500
<0></td><td>%</td><td>You can set up the torque limit in case of emergency stop as below.
• During deceleration of over-travel inhibit with the setup 2 of Pr66 (Sequence at over-travel inhibit input)
• During deceleration with the setup of 8 or 9 of Pr67 (Sequence at main power off)
• During deceleration with the setup of 8 or 9 of Pr69 (Sequence at Servo-OFF)
Normal torque limit is used by setting this to 0.</td></tr>
<tr><td>71</td><td>Setup of analog input excess</td><td>0 to 100
<0></td><td>0.1V</td><td>• You can set up the excess detection judgment level of analog velocity command (SPR : CN X5, Pin-14) with voltage after offset correction.
• Err39 (Analog input excess protective function) becomes invalid when you set up this to 0.</td></tr>
<tr><td>72</td><td>Setup of over-load level</td><td>0 to 500
<0></td><td>%</td><td>• You can set up the over-load level. The overload level becomes 115 [%] by setting up this to 0.
• Use this with 0 setup in normal operation. Set up other value only when you need to lower the over-load level.
• The setup value of this parameter is limited by 115[%] of the motor rating.</td></tr>
<tr><td>73</td><td>Setup of over-speed level</td><td>0 to 20000
<0></td><td>r/min</td><td>• You can set up the over-speed level. The over-speed level becomes 1.2 times of the motor max. speed by setting up this to 0.
• Use this with 0 setup in normal operation. Set up other value only when you need to lower the over-speed level.
• The setup value of this parameter is limited by 1.2 times of the motor max. speed.
<Caution>
The detection error against the setup value is ±3 [r/min] in case of the 7-wire absolute encoder, and ±36 [r/min] in case of the 5-wire incremental encoder.</td></tr>
</table>

<Notes>

• For parameters which No. have a suffix of "*", changed contents will be validated when you turn on the control power.

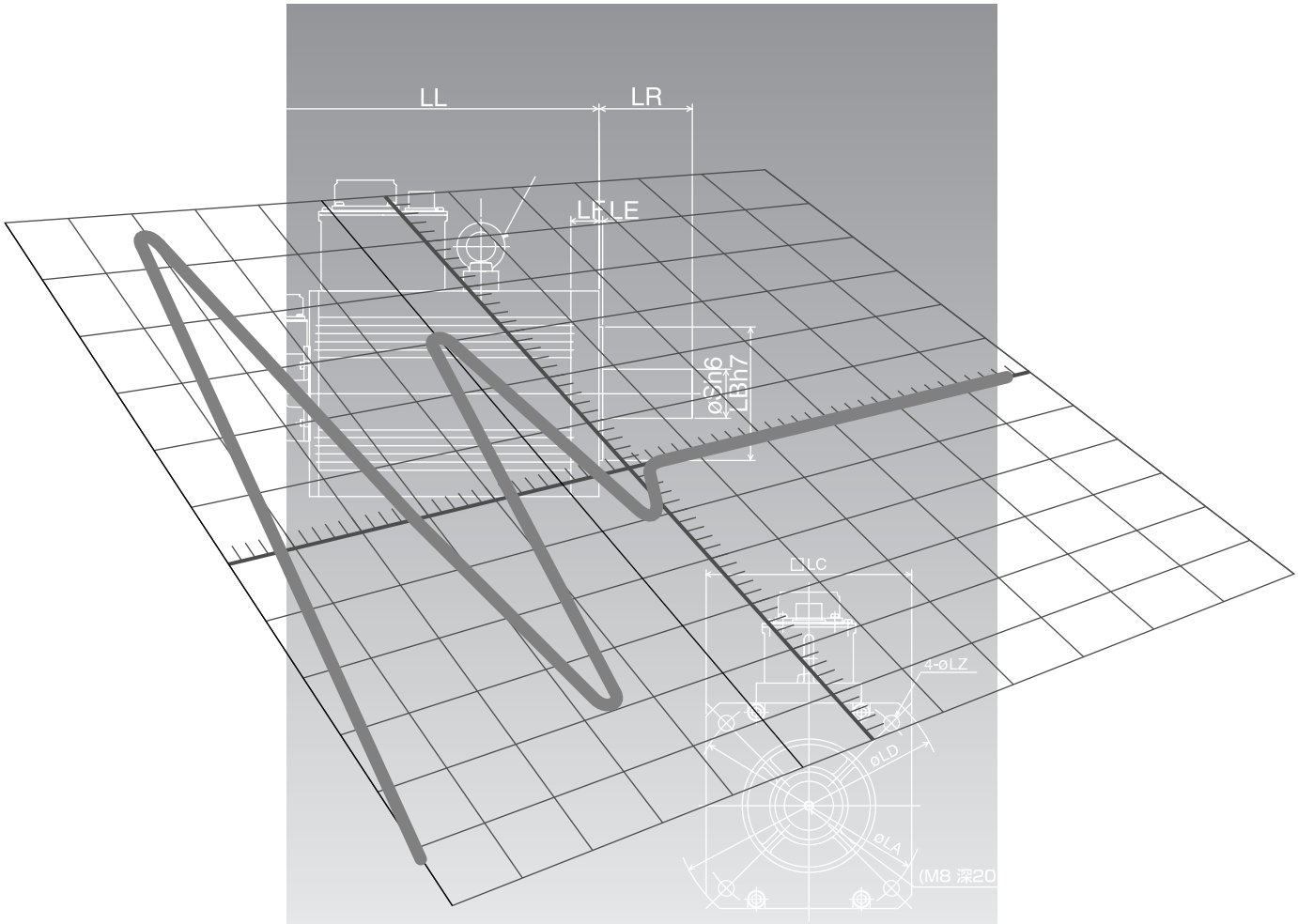

[Full-Closed Control Mode]

page

Outline of Full-Closed Control 190
What is Full-Closed Control ? 190

Control Block Diagram of Full-Closed Control Mode ... 191

Wiring to the Connector, CN X5 192
Wiring Example to the Connector, CN X5 192
Interface Circuit 193
Input Signal and Pin No. of the Connector, CN X5 195
Output Signal and Pin No. of the Connector, CN X5 201

Connection to the Connector, CN X7 204
Connector, CN X7 204
Wiring to the External Scale, Connector, CN X7 205

Real-Time Auto-Gain Tuning 206
Outline 206
Applicable Range 206
How to Operate 206
Adaptive Filter 207
Parameters Which are Automatically Set up 207

Parameter Setup 208
Parameters for Functional Selection 208
Parameters for Adjustment of Time Constant of Gains and Filters 211
Parameters for Auto-Gain Tuning 212
Parameters for Adjustment (2nd Gain Switching Function) 214
Parameters for Position Control 216
Parameters for Velocity/Torque Control 220
Parameters for Sequence 220
Parameters for Full-Closed 224

Outline of Full-Closed Control

What Is Full-Closed Control ?

In this full-closed control, you can make a position control by using a linear scale mounted externally which detects the machine position directly and feeds it back.. With this control, you can control without being affected by the positional variation due to the ball screw error or temperature and you can expect to achieve a very high precision positioning in sub-micron order.

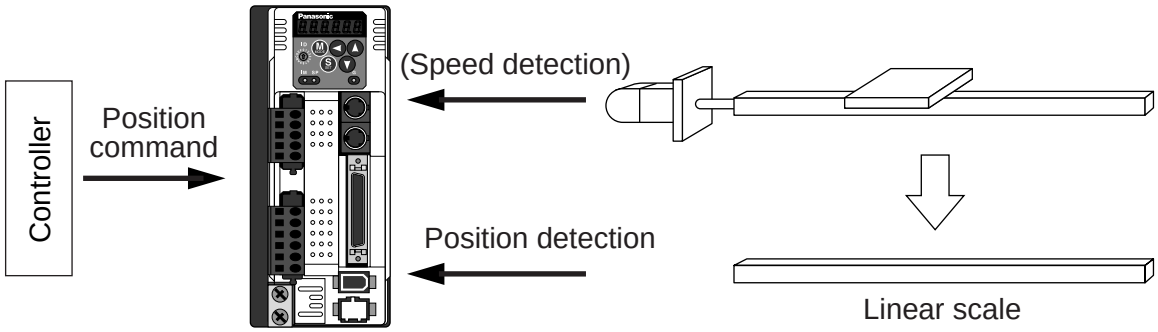

We recommend the linear scale division ratio of $\frac{1}{20} \leqq$ Linear scale division ratio $\leqq 20$

Cautions on Full-Closed Control

(1) Enter the command pulses making the external scale as a reference.
If the command pulses do not match to the external scale pulses, use the command division/multiplication function (Pr48-4B) and setup so that the command pulses after division/multiplication is based on the external scale reference.

(2) A4-series supports the linear scale of a communication type. Execute the initial setup of parameters per the following procedures, then write into EEPROM and turn on the power again before using this function.

<How to make an initial setup of parameters related to linear scale >

1) Turn on the power after checking the wiring.
2) Check the values (initial) feedback pulse sum and external scale feedback pulse sum with the front panel or with the setup support software, PANATERM .
3) Move the work and check the travel from the initial values of the above 2).
4) If the travel of the feedback sum and the external scale feedback pulse sum are reversed in positive and negative, set up the reversal of external scale direction (Pr7C) to 1.
5) Set up the external scale division ratio (Pr78-7A) using the formula below,

$$\text{External scale division ratio} = \frac{\text{Total variation of external scale feedback pulse sum}}{\text{Total variation of feedback pulse sum}} = \frac{\text{Pr78} \times 2^{\text{Pr79}}}{\text{Pr7A}}$$

* If the design value of the external scale division ratio is obtained, set up this value.

6) Set up appropriate value of hybrid deviation excess (Pr7B) in 16 pulse unit of the external scale resolution, in order to avoid the damage to the machine.
* A4-series driver calculates the difference between the encoder position and the linear scale position as hybrid deviation, and is used to prevent the machine runaway or damage in case of the linear scale breakdown or when the motor and the load is disconnected.
If the hybrid deviation excess range is too wide, detection of the breakdown or the disconnection will be delayed and error detection effect will be lost. If this is too narrow, it may detect the normal distortion between the motor and the machine under normal operation as an error.
* When the external scale division ration is not correct, hybrid deviation excess error (Err25) may occur especially when the work travels long distance, even though the linear scale and the motor position matches.
In this case, widen the hybrid deviation excess range by matching the external scale division ratio to the closest value.

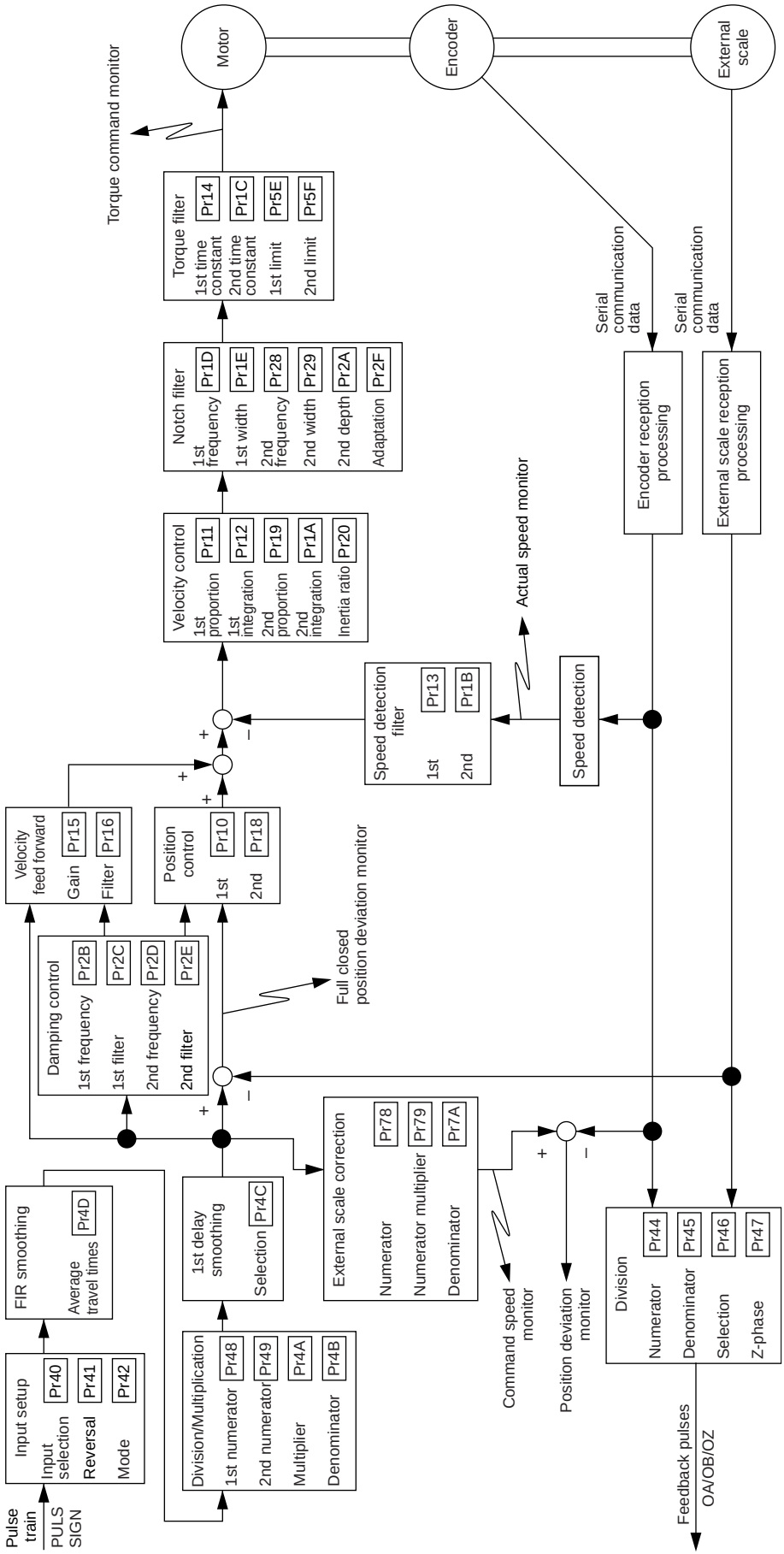
Motor
Encoder
External scale
Torque command monitor
Torque filter
1st time constant Pr14
2nd time constant Pr1C
1st limit Pr5E
2nd limit Pr5F
Notch filter
1st frequency Pr1D
1st width Pr1E
2nd frequency Pr28
2nd width Pr29
2nd depth Pr2A
Adaptation Pr2F
Velocity control
1st proportion Pr11
1st integration Pr12
2nd proportion Pr19
2nd integration Pr1A
Inertia ratio Pr20
Speed detection filter
1st Pr13
2nd Pr1B
Speed detection
Actual speed monitor
Serial communication data
Encoder reception processing
External scale reception processing
Velocity feed forward
Gain Pr15
Filter Pr16
Position control
1st Pr10
2nd Pr18
Damping control
1st frequency Pr2B
1st filter Pr2C
2nd frequency Pr2D
2nd filter Pr2E
Full closed position deviation monitor
FIR smoothing
Average travel times Pr4D
1st delay smoothing
Selection Pr4C
External scale correction
Numerator Pr78
Numerator multiplier Pr79
Denominator Pr7A
Command speed monitor
Position deviation monitor
Division
Numerator Pr44
Denominator Pr45
Selection Pr46
Z-phase Pr47
Input setup
Input selection Pr40
Reversal Pr41
Mode Pr42
Division/Multiplication
1st numerator Pr48
2nd numerator Pr49
Multiplier Pr4A
Denominator Pr4B
Pulse train
PULS
SIGN
Feedback pulses
OA/OB/OZ

Wiring to the Connector, CN X5

Wiring Example to the Connector, CN X5

Wiring example of full-closed control mode

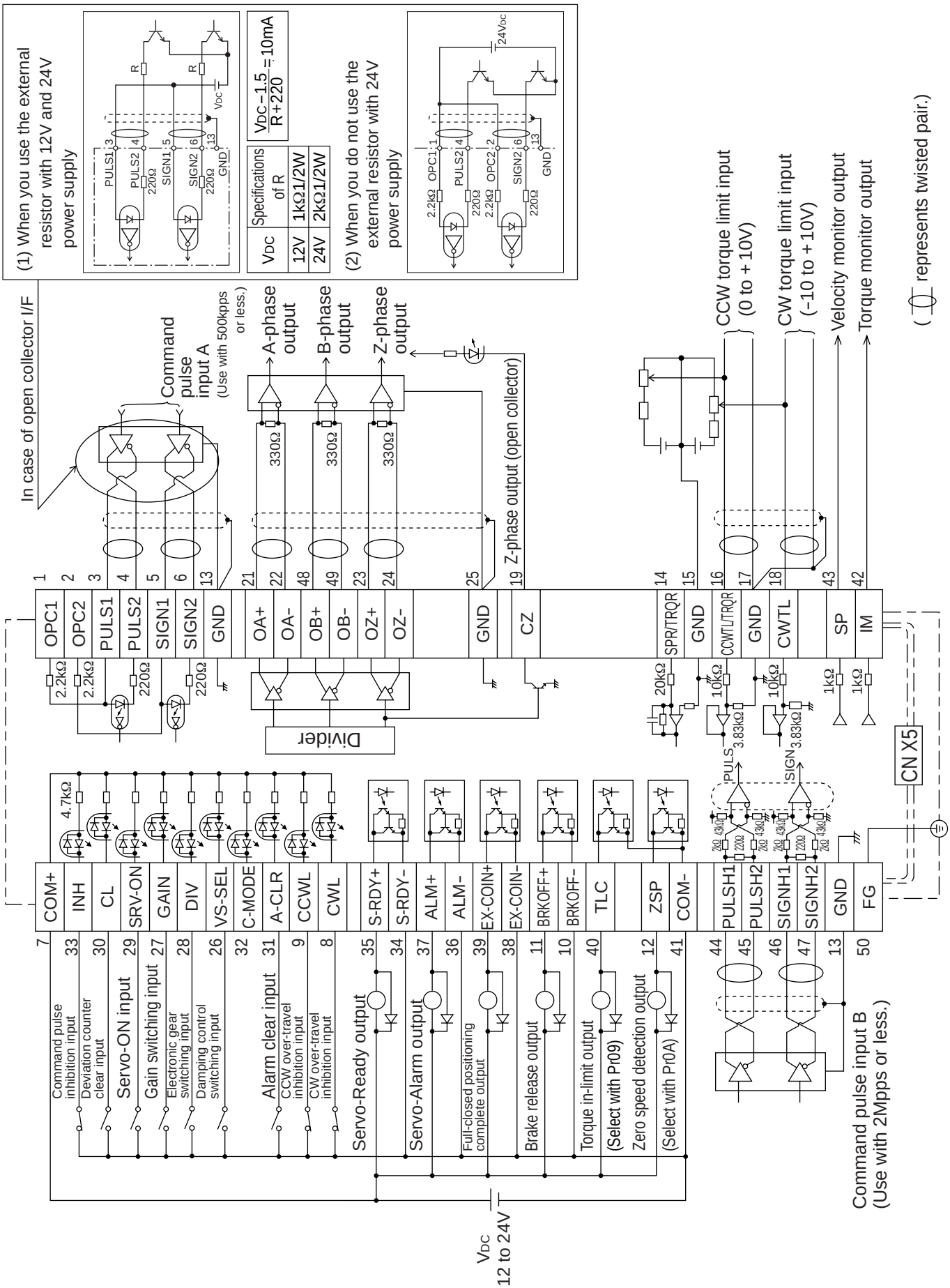

Interface Circuit

Input Circuit

SI Connection to sequence input signals

- Connect to contacts of switches and relays, or open collector output transistors.
- When you use contact inputs, use the switches and relays for micro current to avoid contact failure.
- Make the lower limit voltage of the power supply (12 to 24V) as 11.4V or more in order to secure the primary current for photo-couplers.

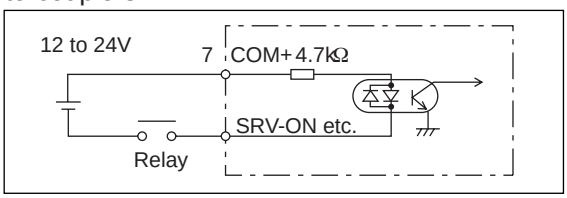

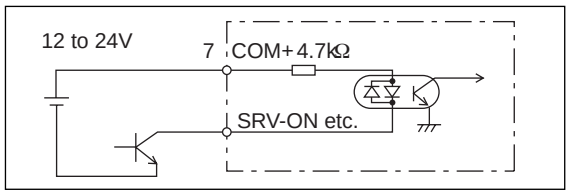

PI1 Connection to sequence input signals (Pulse train interface)

(1) Line driver I/F (Input pulse frequency : max. 500kpps)

- This signal transmission method has better noise immunity. We recommend this to secure the signal transmission.

(2)Open collector I/F (Input pulse frequency : max. 200kpps)

- The method which uses an external control signal power supply (V_{DC})
- Current regulating resistor R corresponding to V_{DC} is required in this case.
- Connect the specified resister as below.

V_{DC}	Specifications
12V	1kΩ1/2W
24V	2kΩ1/2W

$$\frac{V_{DC}-1.5}{R+220} \fallingdotseq 10mA$$

(3)Open collector I/F (Input pulse frequency : max. 200kpps)

- Connecting diagram when a current regulating resistor is not used with 24V power supply.

represents twisted pair.

Max.input voltage : DC24V,
Rated current : 10mA

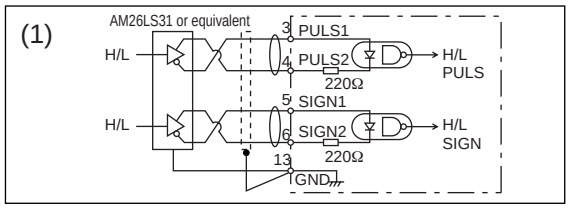

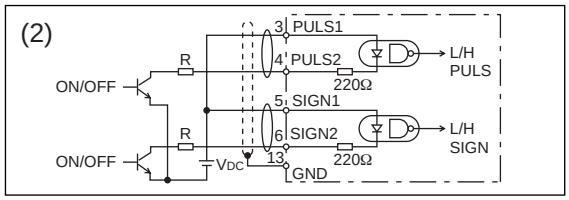

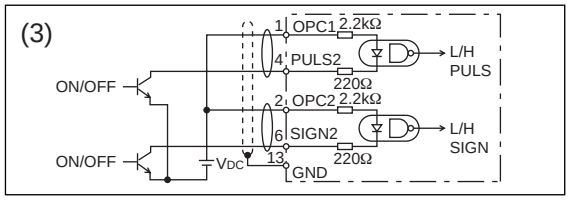

PI2 Connection to sequence input signals (Pulse train interface exclusive to line driver)

Line driver I/F (Input pulse frequency : max. 2Mpps)

- This signal transmission method has better noise immunity. We recommend this to secure the signal transmission when line driver I/F is used.

represents twisted pair.

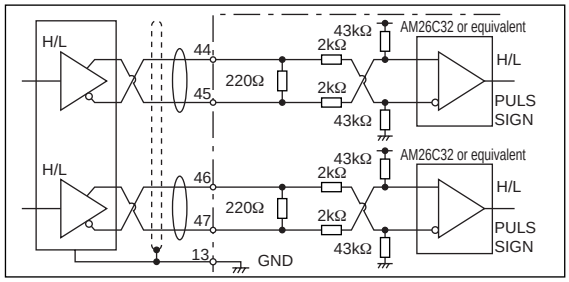

AI Analog command input

- The analog command input goes through 3 routes, SPR/TRQR(Pin-14), CCWTL (Pin-16) and CWTL (Pin-18).
- Max. permissible input voltage to each input is ±10V. For input impedance of each input, refer to the right Fig.
- When you compose a simple command circuit using variable resistor(VR) and register R, connect as the right Fig. shows. When the variable range of each input is made as –10V to +10V, use VR with 2kΩ, B-characteristics, 1/2W or larger, R with 200Ω, 1/2W or larger.
- A/D converter resolution of each command input is as follows.
  (1)ADC1 : 16 bit (SPR/TRQR), (including 1bit for sign), ±10V
  (2)ADC2 : 10 bit (CCWTL, CWTL), 0 – 3.3V

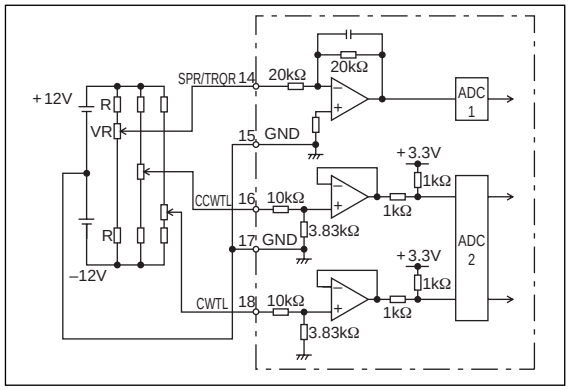

Wiring to the Connector, CN X5

Output Circuit

SO1 SO2 Sequence output circuit

- The output circuit is composed of open collector transistor outputs in the Darlington connection, and connect to relays or photo-couplers.
- There exists collector to emitter voltage, V_{CE} (SAT) of approx. 1V at transistor-ON, due to the Darlington connection of the output or. Note that normal TTL IC cannot be directly connected since it does not meet VIL.
- There are two types of output, one which emitter side of the output transistor is independent and is connectable individually, and the one which is common to – side of the control power supply (COM–).
- If a recommended primary current value of the photo-coupler is 10mA, decide the resistor value using the formula of the right Fig.

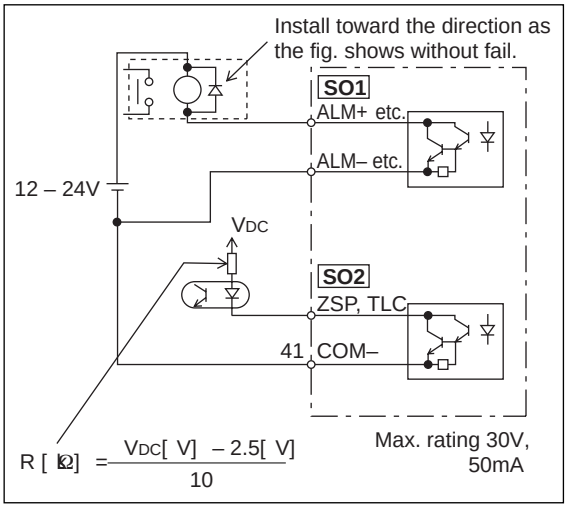

For the recommended primary current value, refer to the data sheet of apparatus or photo-coupler to be used.

PO1 Line driver (Differential output) output

- Feeds out the divided encoder outputs (A, B and Z-phase) in differential through each line driver.
- At the host side, receive these in line receiver. Install a terminal resistor (approx. 330Ω) between line receiver inputs without fail.
- These outputs are not insulated.

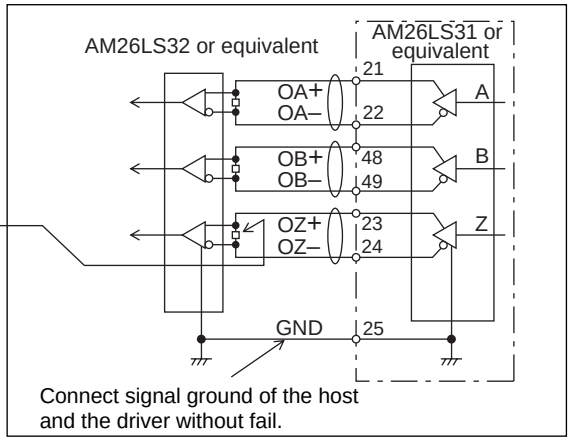

represents twisted pair.

PO2 Open collector output

- Feeds out the Z-phase signal among the encoder signals in open collector. This output is not insulated.
- Receive this output with high-speed photo couplers at the host side, since the pulse width of the Z-phase signal is narrow.

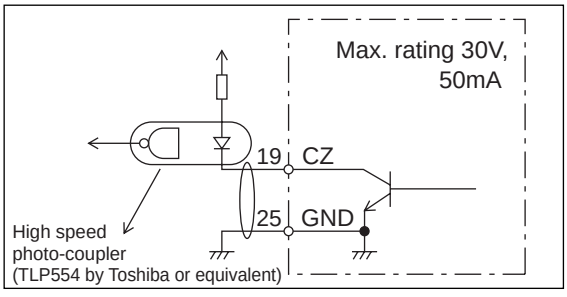

represents twisted pair.

AO Analog monitor output

- There are two outputs, the speed monitor signal output (SP) and the torque monitor signal output (IM)
- Output signal width is ±10V.
- The output impedance is 1kΩ. Pay an attention to the input impedance of the measuring instrument or the external circuit to be connected.

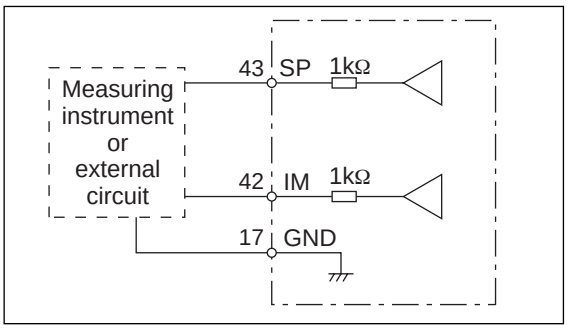

<Resolution>

(1) Speed monitor output (SP)

With a setup of 6V/3000r/min (Pr07= 3), the resolution converted to speed is 8r/min/16mV.

(2) Torque monitor output (IM)

With a relation of 3V/rated torque (100%), the resolution converted to torque is 0.4%/12mV.

Input Signal and Pin No. of the Connector, CN X5

Input Signals (common) and Their Functions

<table>
<tr><th>Title of signal</th><th>Pin No.</th><th>Symbol</th><th>Function</th><th>I/F circuit</th></tr>
<tr><td>Power supply for control signal (+)</td><td>7</td><td>COM+</td><td>• Connect + of the external DC power supply (12 to 24V).
• Use the power supply voltage of 12V ± 5% – 24V ± 5%</td><td>–</td></tr>
<tr><td>Power supply for control signal (–)</td><td>41</td><td>COM–</td><td>• Connect – of the external DC power supply (12 to 24V).
• The power capacity varies depending on a composition of I/O circuit. 0.5A or more is recommended.</td><td>–</td></tr>
<tr><td>CW over-travel inhibit input</td><td>8</td><td>CWL</td><td>• Use this input to inhibit a CW over-travel (CWL).
• Connect this so as to make the connection to COM– open when the moving portion of the machine over-travels the movable range toward CW.
• CWL input will be invalidated when you set up Pr04 (Setup of over-travel inhibit input) to 1.Default is "Invalid (1)".
• You can select the action when the CWL input is validated with the setup of up Pr66 (Sequence at over-travel inhibit). Default is "Emergency stop with dynamic brake".(Pr66= 0)</td><td>SI
P.193</td></tr>
<tr><td>CCW over-travel inhibit input</td><td>9</td><td>CCWL</td><td>• Use this input to inhibit a CCW over-travel (CCWL).
• Connect this so as to make the connection to COM– open when the moving portion of the machine over-travels the movable range toward CCW.
• CWL input will be invalidated when you set up Pr04 (Setup of over-travel inhibit input) to 1.Default is "Invalid (1)".
• You can select the action when the CCWL input is validated with the setup of Pr66 (Sequence at over-travel inhibit). Default is "Emergency stop with dynamic brake".(Pr66= 0)</td><td>SI
P.193</td></tr>
<tr><td>damping control switching input</td><td>26</td><td>VS-SEL</td><td>• Function varies depending on the control mode.
Velocity/ Torque control
• Becomes to a speed-zero clamp input (ZEROSPD).
<table>
<tr><th>Pr06</th><th>Connection to COM–</th><th>Content</th></tr>
<tr><td>0</td><td>–</td><td>ZEROSPD input is invalid.</td></tr>
<tr><td rowspan="2">1</td><td>open</td><td>Speed command is 0</td></tr>
<tr><td>close</td><td>Normal action</td></tr>
<tr><td rowspan="2">2</td><td>open</td><td>Speed command is to CCW</td></tr>
<tr><td>close</td><td>Speed command is to CW.</td></tr>
</table>
• In case Pr06 is 2 at torque control, ZERPSPD is invalid.
Position/ Full-closed control
• Becomes to an input of damping control switching (VS-SEL).
• While Pr24 (Damping filter switching selection) is 1, the 1st damping filter (Pr2B, Pr2C) will be validated when you open this input, and the 2nd damping filter (Pr2D, Pr2E) will be validated when you connect this input to COM–.</td><td>SI
P.193</td></tr>
<tr><td>Gain switching input
or
Torque limit switching input</td><td>27</td><td>GAIN

TL-SEL</td><td>• Function varies depending on the setups of Pr30 (2nd gain setup) and Pr03 (Selection of torque limit).
<table>
<tr><th>Pr03</th><th>Pr30</th><th>Connection to COM–</th><th>Content</th></tr>
<tr><td rowspan="6">0 – 2</td><td rowspan="2">0</td><td>open</td><td>Velocity loop : PI (Proportion/Integration) action</td></tr>
<tr><td>close</td><td>Velocity loop : P (Proportion) action</td></tr>
<tr><td rowspan="4">1</td><td colspan="2">when the setups of Pr31 and Pr36 are 2</td></tr>
<tr><td>open</td><td>1st gain selection (Pr10,11,12,13 and 14)</td></tr>
<tr><td>close</td><td>2nd gain selection (Pr18,19,1A,1B and 1C)</td></tr>
<tr><td colspan="2">when the setups of Pr31 and Pr36 are other than 2</td></tr>
<tr><td colspan="3">invalid</td></tr>
<tr><td>3</td><td>–</td><td colspan="2">• Input of torque limit switching (TL-SEL)
• Pr5E (Setup of 1st torque limit) will be validated when you open this input, and Pr5F (Setup of 2nd torque limit) will be validated when you connect this input to COM–.</td></tr>
</table>
• For details of 2nd gain switching function, refer to P.243 "Gain Switching Function" of Adjustment.</td><td>SI
P.193</td></tr>
</table>

Wiring to the Connector, CN X5

<table>
<tr><th>Title of signal</th><th>Pin No.</th><th>Symbol</th><th>Function</th><th>I/F circuit</th></tr>
<tr><td>Electronic gear (division/ multiplication) switching input</td><td>28</td><td>DIV</td><td>• Function varies depending on the control mode.
<table><tr><td>Position/ Full-closed control</td><td>• You can switch the numerator of electronic gear.
• By connecting to COM–, you can switch the numerator of electronic gear from Pr48 (1st numerator of electronic gear) to Pr49 (2nd numerator of electronic gear)
• For the selection of command division/multiplication, refer to the table of next page, "Numerator selection of command scaling"</td></tr><tr><td>Velocity control</td><td>• Input of internal speed selection 3 (INTSPD3).
• You can make up to 8-speed setups combining INH/ INTSPD1 and CL/INTSPD2 inputs. For details of setup, refer to the table of P.131, "Selection of Internal Speed".</td></tr><tr><td>Torque control</td><td>• This input is invalid.</td></tr></table><Caution>
Do not enter the command pulse 10ms before/after switching.</td><td>SI
P.193</td></tr>
<tr><td>Servo-ON input</td><td>29</td><td>SRV-ON</td><td>• Turns to Servo-ON status by connecting this input to COM–.
• Turns to Servo-OFF status by opening connection to COM–, and current to the motor will be shut off.
• You can select the dynamic brake action and the deviation counter clearing action at Servo-OFF with Pr69 (Sequence at Servo-OFF).
<Caution>
1.Servo-ON input becomes valid approx. 2 sec after power-on.
(see P.42, "Timing Chart" of Preparation.)
2.Never run/stop the motor with Servo-ON/OFF.
3.After shifting to Servo-ON, allow 100ms or longer pause before entering the pulse command.</td><td>SI
P.193</td></tr>
<tr><td>Deviation counter clear input</td><td>30</td><td>CL</td><td>• Function varies depending on the control mode.
<table><tr><td>Position/ Full-closed control</td><td>• Input (CL) which clears the positional deviation counter and full-closed deviation counter.
• You can clear the counter of positional deviation and full-closed deviation by connecting this to COM–.
• You can select the clearing mode with Pr4E (Counter clear input mode).<table><tr><th>Pr4E</th><th>Content</th></tr><tr><td>0</td><td>Clears the counter of positional deviation and full-closed deviation while CL is connected to COM–.</td></tr><tr><td>1
[Default]</td><td>Clears the counter of positional deviation and full-closed deviation only once by connecting CL to COM– from open status.</td></tr><tr><td>2</td><td>CL is invalid</td></tr></table></td></tr><tr><td>Velocity control</td><td>• Input of selection 2 of internal command speed (INTSPD2)
• You can make up to 8-speed setups combining INH/ INTSPD1 and CL/INTSPD3 inputs. For details of setup, refer to the table in P.131, "Selection of Internal Speed" of Velocity Control Mode.</td></tr><tr><td>Torque control</td><td>• This input is invalid.</td></tr></table></td><td>SI
P.193</td></tr>
<tr><td>Alarm clear input</td><td>31</td><td>A-CLR</td><td>• You can release the alarm status by connecting this to COM– for more than 120ms.
• The deviation counter will be cleared at alarm clear.
• There are some alarms which cannot be released with this input.
For details, refer to P.252, "Protective Function " of When in Trouble.</td><td>SI
P.193</td></tr>
</table>

<table>
<tr><th>Title of signal</th><th>Pin No.</th><th>Symbol</th><th>Function</th><th>I/F circuit</th></tr>
<tr><td>Inhibition input of command pulse input</td><td>33</td><td>INH</td><td>• Function varies depending on the control mode.
Position/ Full closed control
• Inhibition input of command pulse input (INH)
• Ignores the position command pulse by opening the connection to COM–
• You can invalidate this input with Pr43 (Invalidation of command pulse inhibition input)
<table><tr><th>Pr43</th><th>Content</th></tr><tr><td>0</td><td>INH is valid.</td></tr><tr><td>1(Default)</td><td>INH is valid.</td></tr></table>Velocity control
• Selection 1 input of internal command speed (INTSPD1)
•You can make up to 8-speed setups combining INH/INTSPD2 and CL/INTSPD3 inputs. For details of the setup, refer to the table of P.131, "Selection of Internal Speed" of Velocity Control Mode.
Torque control
• This input is invalid.</td><td>SI
P.193</td></tr>
</table>

• Numerator selection of electronic gear

CN X5 Pin-28 DIV	Setup of electronic gear
Open	or $\frac{\text{1st numerator of electronic gear (Pr48)} \times 2^{\text{Multiplier of command scaling (Pr4A)}}}{\text{Denominator of electronic gear (Pr4B)}}$ $\frac{\text{Encoder resolution*}}{\text{Command pulse counts per single turn (Pr4B)}}$ * Automatic setup by setting up Pr48 to 0
Short	or $\frac{\text{2nd numerator of electronic gear (Pr49)} \times 2^{\text{Multiplier of command scaling (Pr4A)}}}{\text{Denominator of electronic gear (Pr4B)}}$ $\frac{\text{Encoder resolution*}}{\text{Command pulse counts per single turn (Pr4B)}}$ * Automatic setup by setting up Pr49 to 0

Wiring to the Connector, CN X5

Input Signals (Pulse Train) and Their Functions

You can select appropriate interface out of two kinds, depending on the command pulse specifications.

• Pulse train interface exclusive for line driver

Title of signal	Pin No.	Symbol	Function	I/F circuit
Command pulse input 1	44	PULSH1	• Input terminal for position command pulse. You can select by setting up Pr40 (Selection of command pulse input) to 1. • This input becomes invalid at such control mode as velocity control or torque control, where no position command is required. • Permissible max. input frequency is 2Mpps. • You can select up to 6 command pulse input formats with Pr41 (Setup of command pulse rotational direction) and Pr42 (Setup of command pulse input mode). For details, refer to the table below, "Command pulse input format".	PI2 P.193
	45	PULSH2		
Command pulse sign input 1	46	SIGNH1		
	47	SIGNH2		

• Pulse train interface

Title of signal	Pin No.	Symbol	Function	I/F circuit
Command pulse input 2	1	OPC1	• Input terminal for the position command. You can select by setting up Pr40 (Selection of command pulse input) to 0. • This input becomes invalid at such control mode as the velocity control or torque control, where no position command is required. • Permissible max. input frequency is 500kpps at line driver input and 200kpps at open collector input. • You can select up to 6 command pulse input formats with Pr41 (Setup of command pulse rotational direction) and Pr42 (Setup of command pulse input mode). For details, refer to the table below, "Command pulse input format".	PI1 P.193
	3	PULS1		
	4	PULS2		
Command pulse sign input 2	2	OPC2		
	5	SIGN1		
	6	SIGN2		

• Command pulse input format

Pr41 Setup value (Setup of command pulse rotational direction)	Pr42 Setup value (Setup of command pulse input mode)	Command pulse format	Signal title	CCW command	CW command
0	0 or 2	2-phase pulse with 90° difference (A+B-phase)	PULS SIGN	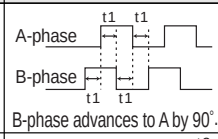	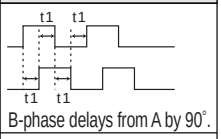
	1	CW pulse train + CCW pulse train	PULS SIGN	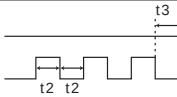	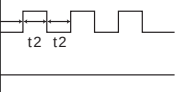
	3	Pulse train + Sign	PULS SIGN	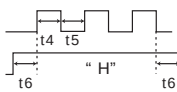	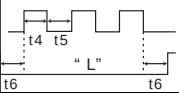
1	0 or 2	2-phase pulse with 90° difference (A+B-phase)	PULS SIGN	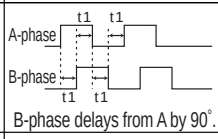	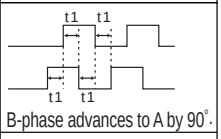
	1	CW pulse train + CCW pulse train	PULS SIGN	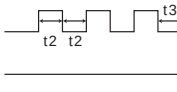	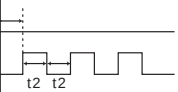
	3	Pulse train + Sign	PULS SIGN	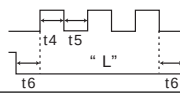	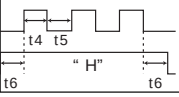

- PULS and SIGN represents the outputs of pulse train in put circuit. Refer to the fig. of P.193, "Input Circuit".
- In case of CW pulse train + CCW pulse train and pulse train + sign, pulse train will be captured at the rising edge.
- In case of 2-phase pulse, pulse train will be captured at each edge.

• Permissible max. input frequency of command pulse input signal and min. necessary time width

Input I/F of PULS/SIGN signal		Permissible max. input frequency	Minimum necessary time width					
			t_1	t_2	t_3	t_4	t_5	t_6
Pulse train interface exclusive for line driver		2Mpps	500ns	250ns	250ns	250ns	250ns	250ns
Pulse train interface	Line driver interface	500kpps	2μs	1μs	1μs	1μs	1μs	1μs
	Open collector interface	200kpps	5μs	2.5μs	2.5μs	2.5μs	2.5μs	2.5μs

Set up the rising/falling time of command pulse input signal to 0.1μs or shorter.

Input Signals (Analog Command) and Their Functions

<table>
<tr><th>Title of signal</th><th>Pin No.</th><th>Symbol</th><th>Function</th><th>I/F circuit</th></tr>
<tr><td>Speed command input
or
Torque command input,
or
Speed limit input</td><td>14</td><td>SPR

TRQR

SPL</td><td>• Function varies depending on control mode.
<table>
<tr><th>Pr02</th><th>Control mode</th><th>Function</th></tr>
<tr><td>1
3
5</td><td>Velocity control
Position/ Velocity
Velocity/ Torque</td><td>• External velocity command input (SPR) when the velocity control is selected.
• Set up the gain, polarity, offset and filter of the speed command with;
Pr50 (Speed command input gain)
Pr51 (Speed command input reversal)
Pr52 (Speed command offset)
Pr57 (Speed command filter setup)</td></tr>
<tr><td>2
4</td><td>Torque control
Position/ Torque</td><td>• Function varies depending on Pr5B (Selection of torque command)
<table>
<tr><th>Pr5B</th><th>Content</th></tr>
<tr><td>0</td><td>• Torque command (TRQR) will be selected.
• Set up the torque (TRQR) gain, polarity, offset and filter with;
Pr5C (Torque command input gain)
Pr5D (Torque command input reversal)
Pr52 (Speed command offset)
Pr57 (Speed command filter setup)</td></tr>
<tr><td>1</td><td>• Speed limit (SPL) will be selected.
• Set up the speed limit (SPL) gain, offset and filter with;
Pr50 (Speed command input gain)
Pr52 (Speed command offset)
Pr57 (Speed command filter setup)</td></tr>
</table></td></tr>
<tr><td>5</td><td>Velocity/ Torque</td><td>• Function varies depending on Pr5B (Selection of torque command)
<table>
<tr><th>Pr5B</th><th>Content</th></tr>
<tr><td>0</td><td>• This input becomes invalid.</td></tr>
<tr><td>1</td><td>• Speed limit (SPL) will be selected.
• Set up the speed limit (SPL) gain, offset and filter with;
Pr50 (Speed command input gain)
Pr52 (Speed command offset)
Pr57 (Speed command filter setup)</td></tr>
</table></td></tr>
<tr><td>Others</td><td>Other control mode</td><td>• This input is invalid.</td></tr>
</table>
•The resolution of the A/D converter used in this input is 16 bit (including 1 bit for sign).
± 32767 (LSB) = ± 10[V] , 1[LSB] = 0.3[mV]</td><td>AI
P.193</td></tr>
</table>

*Function becomes valid when the control mode with underline (▭ / ▭) is selected while the switching mode is used in the control mode in table.

<Remark>

Do not apply voltage exceeding ±10V to analog command inputs of SPR/TRQR/SPL.

Wiring to the Connector, CN X5

<table>
<tr><th>Title of signal</th><th>Pin No.</th><th>Symbol</th><th>Function</th><th>I/F circuit</th></tr>
<tr><td>CCW-Torque limit input</td><td>16</td><td>CCWTL</td><td>
• Function varies depending on Pr02 (Control mode setup).
<table>
<tr><th>Pr02</th><th>Control mode</th><th>Function</th></tr>
<tr><td>2
4</td><td>Torque Control
Position/Torque</td><td>• Function varies depending on Pr5B (Selection of torque command)
<table>
<tr><th>Pr5B</th><th>Content</th></tr>
<tr><td>0</td><td>This input becomes invalid.</td></tr>
<tr><td>1</td><td>• Torque command input (TRQR) will be selected.
• Set up the gain and polarity of the command with;
Pr5C (Torque command input gain)
Pr5D (Torque command input reversal)
• Offset and filter cannot be set up.</td></tr>
</table></td></tr>
<tr><td>5</td><td>Velocity/
Torque</td><td>• Becomes to the torque command input (TRQR).
• Set up the gain and polarity of the command with;
Pr5C (Torque command input gain)
Pr5D (Torque command input reversal)
• Offset and filter cannot be set up.</td></tr>
<tr><td>4
5
Other</td><td>Position/Torque
Velocity/Torque
Other
control mode</td><td>• Becomes to the analog torque limit input to CCW (CCWTL).
• Limit the CCW-torque by applying positive voltage (0 to +10V) (Approx.+3V/rated toque)
• Invalidate this input by setting up Pr03 (Torque limit selection) to other than 0.</td></tr>
</table>
• Resolution of A/D converter used in this input is 16 bit (including 1 bit for sign).
± 511 [LSB] ≡ 11.9[V] , 1 [LSB] ≡ 23[mV]
</td><td>AI
P.193</td></tr>
<tr><td>CW-Torque limit input</td><td>18</td><td>CWTL</td><td>
• Function varies depending on Pr02 (Control mode setup).
<table>
<tr><th>Pr02</th><th>Control mode</th><th>Function</th></tr>
<tr><td>2
4
5</td><td>Torque control
Position/Torque
Velocity/Torque</td><td>• This input becomes invalid when the torque control is selected.</td></tr>
<tr><td>4
5
Other</td><td>Position/Torque
Velocity/Torque
Other
control mode</td><td>• Becomes to the analog torque limit input to CW (CWTL).
• Limit the CW-torque by applying negative voltage (0 – -10V) (Approx.+3V/rated toque).
Invalidate this input by setting up Pr03 (Torque limit selection) to other than 0.</td></tr>
</table>
• Resolution of A/D converter used in this input is 16 bit (including 1 bit for sign).
± 511 [LSB] ≡ 11.9[V] , 1 [LSB] ≡ 23[mV]
</td><td>AI
P.193</td></tr>
</table>

*Function becomes valid when the control mode with underline (▭ / ▭) is selected while the switching mode is used in the control mode in table.

<Remark>

Do not apply voltage exceeding ±10V to analog command input of CWTL and CCWTL.

Output signal and Pin No. of the Connector, CN X5

Output Signals (Common) and Their Functions

Title of signal	Pin No	Symbol	Function	I/F circuit
External brake release signal	**11** **10**	**BRKOFF+** **BRKOFF–**	• Feeds out the timing signal which activates the electromagnetic brake of the motor. • Turns the output transistor ON at the release timing of the electro-magnetic brake. • You can set up the output timing of this signal with Pr6A (Setup of mechanical brake action at stall) and Pr6B (Setup of mechanical brake action at motion). For details, refer to P42, "Timing Chart" of Preparation.)	SO1 P.194
Servo-Ready output	**35** **34**	**S-RDY+** **S-RDY–**	• This signal shows that the driver is ready to be activated. • Output transistor turns ON when both control and main power are ON but not at alarm status.	SO1 P.194
Servo-Alarm output	**37** **36**	**ALM+** **ALM–**	• This signal shows that the driver is in alarm status. • Output transistor turns ON when the driver is at normal status, and turns OFF at alarm status.	SO1 P.194
Positioning complete (In-position)	**39** **38**	**EX-COIN+** **EX-COIN–**	• Function varies depending on the control mode. **Position control**: • Output of positioning complete (COIN) • The output transistor will turn ON when the absolute value of the position deviation pulse becomes smaller than the setup value of Pr60 (Positioning complete range). • You can select the feeding out method with Pr63 (Setup of positioning complete output). **Full-closed control**: • Output of full-closed positioning complete (EX-COIN) • The output transistor will turn ON when the absolute value of full-closed-position deviation pulse becomes smaller than the setup value of Pr60 (Positioning complete range). • You can select the feeding out method with Pr63 (Setup of positioning complete output). **Velocity/ Torque control**: • Output at-speed (speed arrival) (AT-SPEED) • The output transistor will turn ON when the actual motor speed exceeds the setup value of Pr62 (In-speed).	SO1 P.194
Zero-speed detection output signal	**12** **(41)**	**ZSP** **(COM–)**	• Content of the output signal varies depending on Pr0A (Selection of ZSP output). • Default is 1, and feeds out the zero speed detection signal. • For details, see the table below, "Selection of TLC,ZSP output".	SO2 P.194
Torque in-limit signal output	**40** **(41)**	**TLC** **(COM–)**	• Content of the output signal varies depending on Pr09 (Selection of TLC output). • Default is 1, and feeds out the torque in-limit signal. • For details, see the table below, "Selection of TLC,ZSP output".	SO2 P.194

• Selection of TCL and ZSP outputs

Value of Pr09 or Pr0A	X5 TLC : Output of Pin-40	X5 ZSP : Output of Pin-12
0	**• Torque in-limit output (Default of X5 TLC Pr09)** The output transistor turns ON when the torque command is limited by the torque limit during Servo-ON.	
1	**• Zero-speed detection output (Default of X5 ZSP Pr0A)** The output transistor turns ON when the motor speed falls under the preset value with Pr61.	
2	**• Alarm signal output** The output transistor turns ON when either one of the alarms is triggered, over-regeneration alarm, overload alarm, battery alarm, fan-lock alarm or external scale alarm.	
3	**• Over-regeneration alarm** The output transistor turns ON when the regeneration exceeds 85% of the alarm trigger level of the regenerative load protection.	
4	**• Over-load alarm** The output transistor turns ON when the load exceeds 85% of the alarm trigger level of the overload alarm.	
5	**• Battery alarm** The output transistor turns ON when the battery voltage for absolute encoder falls lower than approx. 3.2V.	
6	**• Fan-lock alarm** The output transistor turns ON when the fan stalls for longer than 1s.	
7	**• External scale alarm** The output transistor turns ON when the external scale temperature exceeds 65°, or signal intensity is not enough (adjustment on mounting is required). Valid only at the full-closed control.	
8	**• In-speed (Speed coincidence) output** The output transistor turns ON when the difference between the actual motor speed and the speed command before acceleration/deceleration reaches within the preset range with Pr61. Valid only at the velocity and torque control.	

Wiring to the Connector, CN X5

Output Signals (Pulse Train) and Their Functions

Title of signal	Pin No	Symbol	Function	I/F circuit
A-phase output	**21**	**OA +**	• Feeds out the divided encoder signal or external scale signal (A, B, Z-phase) in differential. (equivalent to RS422) • You can set up the division ratio with Pr44 (Numerator of pulse output division) and Pr45 (Denominator of pulse output division) • You can select the logic relation between A-phase and B-phase, and the output source with Pr46 (Reversal of pulse output logic). • When the external scale is made as an output source, you can set up the interval of Z-phase pulse output with Pr47 (Setup of external scale Z-phase). • Ground for line driver of output circuit is connected to signal ground (GND) and is not insulated. • Max. output frequency is 4Mpps (after quadrupled)	PO1 P.194
	22	**OA –**		
B-phase output	**48**	**OB +**		
	49	**OB –**		
Z-phase output	**23**	**OZ +**		
	24	**OZ –**		
Z-phase output	**19**	**CZ**	• Open collector output of Z-phase signal • The emitter side of the transistor of the output circuit is connected to the signal ground (GND) and is not insulated.	PO2 P.194

<Note>

• When the output source is the encoder

• If the encoder resolution X $\frac{Pr44}{Pr45}$ is multiple of 4, Z-phase will be fed out synchronizing with A-phase.
In other case, the Z-phase width will be equal to the encoder resolution, and will not synchronize with A-phase because of narrower width than that of A-phase.

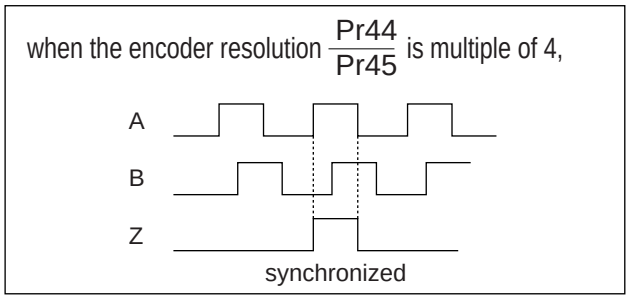

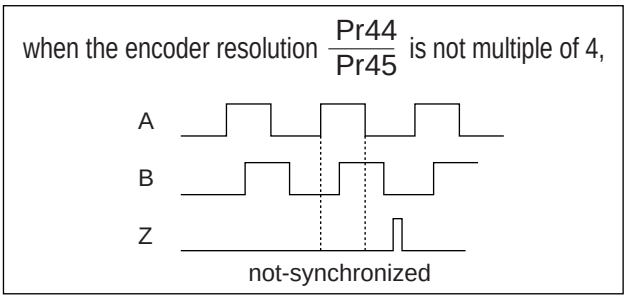

• In case of the 5-wire, 2500P/r incremental encoder, the signal sequence might not follow the above fig. until the first Z-phase is fed out. When you use the pulse output as the control signal, rotate the motor one revolution or more to make sure that the Z-phase is fed out at least once before using.

• When output source is the external scale,

• When the external scale is the output source, Z-phase pulse will not be fed out until the absolute position crosses 0 (000000000000h).

• Z-phase pulse after its crossing of the absolute position 0, will be fed out synchronizing with A-phase in every A-phase pulses which are set with Pr47 (External scale Z-phase setup)

Output Signals (Analog) and Their Functions

<table>
<tr><th>Title of signal</th><th>Pin No</th><th>Symbol</th><th>Function</th><th>I/F circuit</th></tr>
<tr><td>Torque monitor signal output</td><td>42</td><td>IM</td><td>• The content of output signal varies depending on Pr08 (Torque monitor (IM) selection).
• You can set up the scaling with Pr08 value.
<table>
<tr><th>Pr08</th><th>Content of signal</th><th>Function</th></tr>
<tr><td>0, 11,12</td><td>Torque command</td><td>• Feeds out the voltage in proportion to the motor torque command with polarity.
+ : generates CCW torque
– : generates CW torque</td></tr>
<tr><td>1 – 5</td><td>Positional deviation</td><td>• Feeds out the voltage in proportion to the positional deviation pulse counts with polarity.
+ : positional command to CCW of motor position
– : positional command to CW of motor position</td></tr>
<tr><td>6 –10</td><td>Full-closed deviation</td><td>• Feeds out the voltage in proportion to the full-closed deviation pulse counts with polarity.
+ : positional command to CCW of external scale position
– : positional command to CW of external scale position</td></tr>
</table></td><td>AO
P.194</td></tr>
<tr><td>Speed monitor signal output</td><td>43</td><td>SP</td><td>• The content of the output signal varies depending on Pr07 (Speed monitor (IM) selection).
• You can set up the scaling with Pr07 value.
<table>
<tr><th>Pr07</th><th>Control mode</th><th>Function</th></tr>
<tr><td>0 – 4</td><td>Motor speed</td><td>• Feeds out the voltage in proportion to the motor speed with polarity. + : rotates to CCW
– : rotates to CW</td></tr>
<tr><td>5 – 9</td><td>Command speed</td><td>• Feeds out the voltage in proportion to the command speed with polarity.
+ : rotates to CCW
– : rotates to CW</td></tr>
</table></td><td>AO
P.194</td></tr>
</table>

Output Signals (Others) and Their Functions

Title of signal	Pin No	Symbol	Function	I/F circuit
Signal ground	**13,15, 17,25**	**GND**	• Signal ground • This output is insulated from the control signal power (COM–) inside of the driver.	–
Frame ground	**50**	**FG**	• This output is connected to the earth terminal inside of the driver.	–

Wiring to the Connector, CN X7

Connector, CN X7

Power supply for the external scale shall be prepared by customer, or use the following power supply output for the external scale (250mA or less).

Application	Connector PinNo.	Content
Power supply output for external scale	1	EX5V
	2	EX0V
I/F of external scale signals (serial signal)	5	EXPS
	6	$\overline{\text{EXPS}}$
Frame ground	Case	FG

<Note>
EXOV of the external scale power supply output is connected to the control circuit ground which is connected to the Connecter, CN X5.
<Remark>
Do not connect anything to other Pin numbers descried in the above table (Pin-3 and 4).

Cautions

(1) Following external scale can be used for full-closed control.
- AT500 series by Mitutoyo (Resolution 0.05[μm] , max. speed 2[m/s])
- ST771 by Mitutoyo (Resolution 0.5[μm] , max. speed 2[m/s])

(2) **Recommended external scale ratio is 1/20<External scale ratio<20**

If you set up the external scale ratio to smaller value than 50/position loop gain (Pr10 and 18), you may not be able to control per 1 pulse unit. Setup of larger scale ratio may result in larger noise.

Wiring to the External Scale, Connector, CN X7

Wire the signals from the external scale to the external scale connector, CN X7.

1) Cable for the external scale to be the twisted pair with bundle shielding and to having the twisted core wire with diameter of 0.18mm2.
2) Cable length to be max. 20m. Double wiring for 5V power supply is recommended when the wiring length is long to reduce the voltage drop effect.
3) Connect the outer film of the shield wire of the external scale to the shield of the junction cable. Also connect the outer film of the shield wire to the shell (FG) of CN X7 of the driver without fail.
4) Separate the wiring to CN X7 from the power line (L1, L2, L3, L1C _ , L2C (t), U, V. W, ⏚) as much as possible (30cm or more). Do not pass these wires in the same duct, nor bundle together.
5) Do not connect anything to the vacant pins of CN X7.
6) Cut away the amplifier's CN X7 cover.

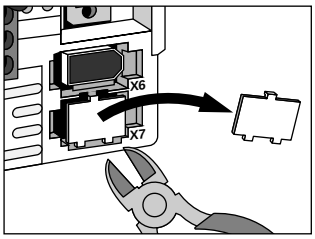

Please cut it out with nippers etc.

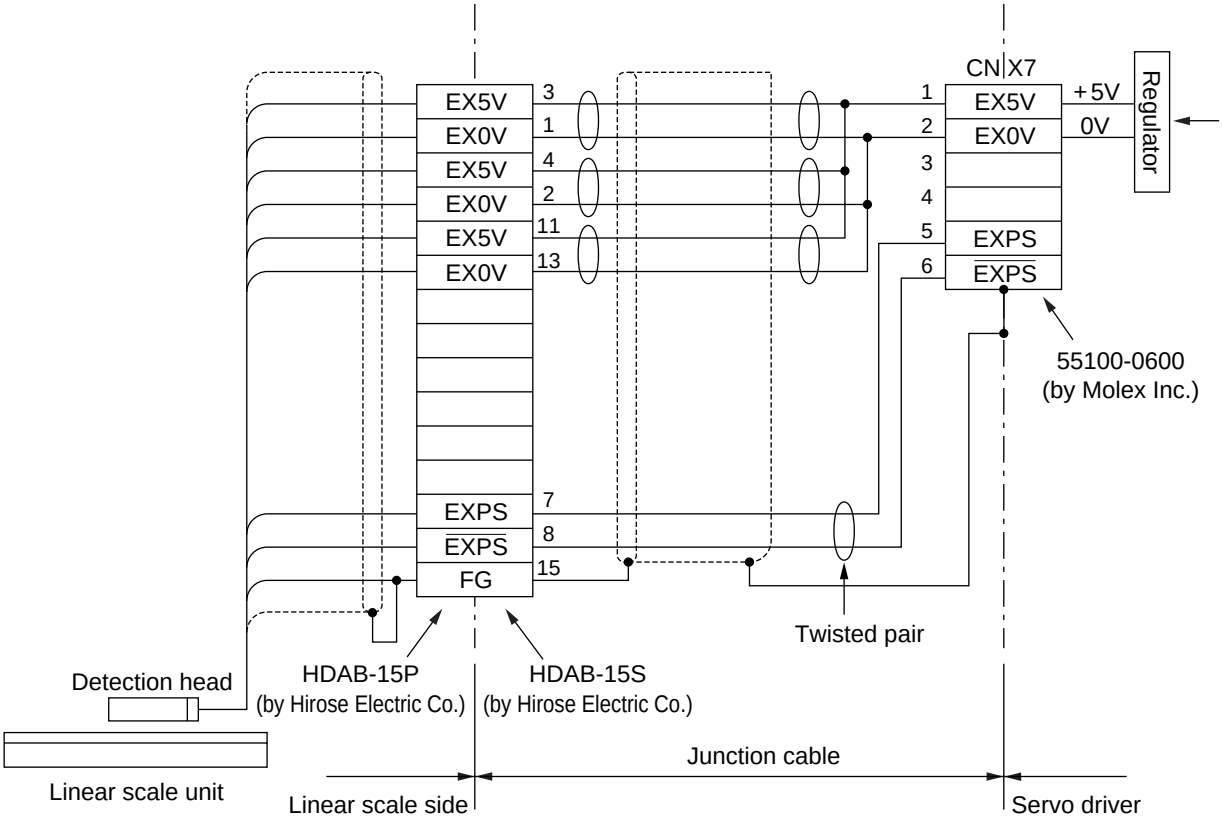

Real-Time Auto-Gain Tuning

Outline

The driver estimates the load inertia of the machine in real time, and automatically sets up the optimum gain responding to the result. Also the driver automatically suppress the vibration caused by the resonance with an adaptive filter.

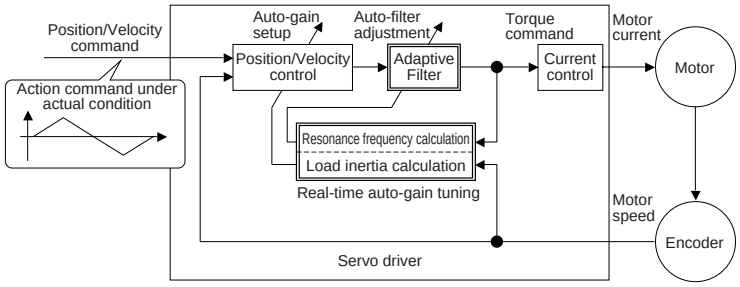

Applicable Range

- Real-time auto-gain tuning is applicable to all control modes.

Caution

Real-time auto-gain tuning may not be executed properly under the conditions described in the right table. In these cases, use the normal mode auto-gain tuning (refer to P.236 of Adjustment), or execute a manual gain tuning. (refer to P.240, of Adjustment)

	Conditions which obstruct real-time auto-gain tuning
Load inertia	• Load is too small or large compared to rotor inertia. (less than 3 times or more than 20 times) • Load inertia change too quickly. (10 [s] or less)
Load	• Machine stiffness is extremely low. • Chattering such as backlash exists.
Action pattern	• Motor is running continuously at low speed of 100 [r/min] or lower. • Acceleration/deceleration is slow (2000[r/min] per 1[s] or low). • Acceleration/deceleration torque is smaller than unbalanced weighted/viscous friction torque. • When speed condition of 100[r/min] or more and acceleration/deceleration condition of 2000[r/min] per 1[s] are not maintained for 50[ms] .

How to Operate

(1) Bring the motor to stall (Servo-OFF).
(2) Set up Pr21 (Real-time auto-gain tuning mode setup) to 1-7. Default is 1.

Setup value	Real-time auto-gain tuning	Varying degree of load inertia in motion
0	(not in use)	–
<1>	normal mode	no change
2		slow change
3		rapid change
4	vertical axis mode	no change
5		slow change
6		rapid change
7	no-gain switching mode	no change

- When the varying degree of load inertia is large, set up 3 or 6.
- When the motor is used for vertical axis, set up 4-6.
- When vibration occurs during gain switching, set up 7.
- When resonance might give some effect, validate the setup of Pr23 (Setup of adaptive filter mode).

(3) Set up Pr22 (Machine stiffness at real-time auto-gain tuning) to 0 or smaller value.
(4) Turn to Servo-ON to run the machine normally.
(5) Gradually increase Pr22 (Machine stiffness at real-time auto-gain tuning) when you want to obtain better response. Lower the value (0 to 3) when you experience abnormal noise or oscillation.
(6) Write to EEPROM when you want to save the result.

Insert the console connector to CN X6 of the driver, then turn on the driver power. → r 0

Setup of parameter, Pr21

Press (S). → dP_SPd
Press (M). → PA_ 00
Match to the parameter No. to be set up with (▲)(▼). (Here match to Pr21.) → PA_ 21
Press (S). → 1
Change the setup with (▲)(▼).
Press (S). → PA_ 21

Setup of parameter, Pr22

Match to Pr22 with (▲). → PA_ 22
Press (S). → 4 (default values)
Numeral increases with (▲), and decreases with (▼).
Press (S).

Writing to EEPROM

Press (M). → EE_SEt
Press (S). → EEP -
Bars increase as the right fig. shows by keep pressing (▲) (approx. 5sec). → EEP --, ------
Writing starts (temporary display). → StArt
Finish → FinISh (Writing completes), rESEt, Error (Writing error occurs)

Return to SELECTION display after writing finishes, referring to "Structure of each mode"(P.60 and 61 of Preparation).

Adaptive Filters

The adaptive filter is validated by setting up Pr23 (Setup of adaptive filter mode) to other than 0.
The adaptive filter automatically estimates a resonance frequency out of vibration component presented in the motor speed in motion, then removes the resonance components from the torque command by setting up the notch filter coefficient automatically, hence reduces the resonance vibration.
The adaptive filter may not operate property under the following conditions. In these cases, use 1st notch filter (Pr1D and 1E) and 2nd notch filter (Pr28-2A) to make measures against resonance according to the manual adjusting procedures.
For details of notch filters, refer to P.246, "Suppression of Machine Resonance" of Adjustment.

	Conditions which obstruct adaptive filter action
Resonance point	• When resonance frequency is lower than 300[Hz] . • While resonance peak is low or control gain is small and when no affect from these condition is given to the motor speed. • When multiple resonance points exist.
Load	• When the motor speed variation with high frequency factor is generated due to non-linear factor such as backlash.
Command pattern	• When acceleration/deceleration is very extreme such as more than 30000 [r/min] per 1 [s] .

<Note>
Even though Pr23 is set up to other than 0, there are other cases when adaptive filter is automatically invalidated. Refer to P.235, "Invalidation of adaptive filter" of Adjustment.

Parameters Which Are Automatically Set Up.

Following parameters are automatically adjusted.

PrNo.	Title
10	1st gain of position loop
11	1st gain of velocity loop
12	1st time constant of velocity loop integration
13	1st filter of velocity detection
14	1st time constant of torque filter
18	2nd gain of position loop
19	2nd gain of velocity loop
1A	2nd time constant of velocity loop integration
1B	2nd filter of speed detection
1C	2nd time constant of torque filter
20	Inertia ratio
2F	Adaptive filter frequency

Also following parameters are automatically set up.

PrNo.	Title	Setup value
15	Velocity feed forward	300
16	Time constant of feed forward filter	50
27	Setup of instantaneous speed observer	0
30	2nd gain setup	1
31	1st mode of control switching	10
32	1st delay time of control switching	30
33	1st level of control switching	50
34	1st hysteresis of control switching	33
35	Position gain switching time	20
36	2nd mode of control switching	0

<Notes>
- When the real-time auto-gain tuning is valid, you cannot change parameters which are automatically adjusted.
- Pr31 becomes 10 at position or full closed control and when Pr21 (Setup of Real-Time Auto-Gain Tuning Mode) is 1 to 6, and becomes 0 in other cases.

Cautions

(1) After the start-up, you may experience abnormal noise and oscillation right after the first Servo-ON, or when you increase the setup of Pr22 (Selection of machine stiffness at real-time auto-gain tuning), until load inertia is identified (estimated) or adaptive filter is stabilized, however, these are not failures as long as they disappear immediately. If they persist over 3 reciprocating operations, take the following measures in possible order.
   1) Write the parameters which have given the normal operation into EEPROM.
   2) Lower the setup of Pr22 (Selection of machine stiffness at real-time auto-gain tuning).
   3) Set up both Pr21 (Setup of real-time auto-gain tuning) and Pr23 (Setup of adaptive filter mode) to 0, then set up other value than 0. (Reset of inertia estimation and adaptive action)
   4) Invalidate the adaptive filter by setting up Pr23 (Setup of adaptive filter mode setup) to 0, and set up notch filter manually.
(2) When abnormal noise and oscillation occur, Pr20 (Inertia ratio) or Pr2F (Adaptive filter frequency) might have changed to extreme values. Take the same measures as the above in these cases.
(3) Among the results of real-time auto-gain tuning, Pr20 (Inertia ratio) and Pr2F (Adaptive filter frequency) will be written to EEPROM every 30 minutes. When you turn on the power again, auto-gain tuning will be executed using the latest data as initial values.
(4) When you validate the real-time auto-gain tuning, Pr27 (Setup of instantaneous speed observer) will be invalidated automatically.
(5) The adaptive filter is normally invalidated at torque control, however, when you select torque control while you set up Pr02 (Control mode setup) to 4 and 5, the adaptive filter frequency before mode switching will be held.
(6) During the trial run and frequency characteristics measurement of "PANATERM®", the load inertia estimation will be invalidated.

Parameter Setup

Parameters for Functional Selection

Standard default : < >

PrNo.	Title	Setup range	Function/Content
00 *	Address	0 to 15 <1>	In the communication with the host via RS232/485 for multi-axes application, it is necessary to identify which axis the host is communicating. Use this parameter to confirm the address of the axis in numbers.
01 *	LED initial status	0 to 17 <1>	You can select the type of data to be displayed on the front panel LED (7 segment) at the initial status after power-on.
02 *	Setup of control mode	0 to 6 <1>	You can set up the control mode to be used.

- The address is determined by the setup value of rotary switch (0 to F) of the front panel at power-on.
- This value becomes the axis number at serial communication.
- The setup value of this parameter has no effect to the servo action.
- You cannot change the setup of Pr00 with other means than rotary switch.

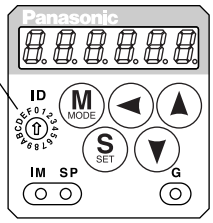

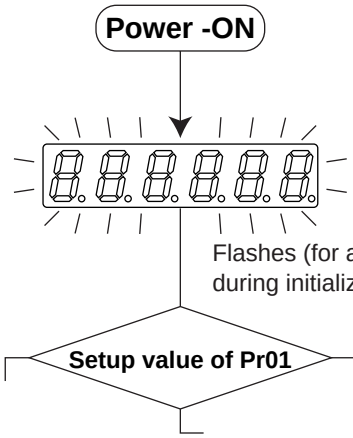

Setup value	Content
0	Positional deviation
<1>	Motor rotational speed
2	Torque output
3	Control mode
4	I/O signal status
5	Error factor/history
6	Software version
7	Alarm
8	Regenerative load factor
9	Over-load factor
10	Inertia ratio
11	Sum of feedback pulses
12	Sum of command pulses
13	External scale deviation
14	Sum of external scale feedback pulses
15	Motor automatic recognizing function
16	Analog input value
17	Factor of "No-Motor Running"

For details of display, refer to P.51 "Setup of Parameter and Mode" of Preparation.

Setup value	Control mode	
	1st mode	2nd mode
0	Position	–
<1>	Velocity	–
2	Torque	–
3 **1	Position	Velocity
4 **1	Position	Torque
5 **1	Velocity	Torque
6	Full-closed	–

**1) When you set up the combination mode of 3, 4 or 5, you can select either the 1st or the 2nd with control mode switching input (C-MODE).
When C-MODE is open, the 1st mode will be selected.
When C-MODE is shorted, the 2nd mode will be selected.
Don't enter commands 10ms before/after switching.

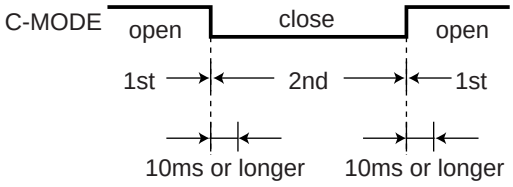

<Notes>

- For parameters which No. have a suffix of "*", changed contents will be validated when you turn on the control power.

Standard default : < >

<table>
<tr><th>PrNo.</th><th>Title</th><th>Setup range</th><th>Function/Content</th></tr>
<tr><td>03</td><td>Selection of torque limit</td><td>0 to 3
<1></td><td>You can set up the torque limiting method for CCW/CW direction.
<table>
<tr><th>Setup value</th><th>CCW</th><th>CW</th></tr>
<tr><td>0</td><td>X5 CCWTL : Pin-16</td><td>X5 CWTL : Pin-18</td></tr>
<tr><td><1></td><td colspan="2">Pr5E is a limit value for both CCW and CW direction</td></tr>
<tr><td>2</td><td>Set with Pr5E</td><td>Set with Pr5F</td></tr>
<tr><td>3</td><td colspan="2">When GAIN/TL-SEL input is open, set with Pr5E
When GAIN/TL-SEL input is shorted, set with Pr5F</td></tr>
</table>
When the setup value is 0, CCWTL and CWTL will be limited by Pr5E (1st torque limit setup). At the torque control, Pr5E becomes the limiting value for CCW/CW direction regardless of the setup of this parameter.</td></tr>
<tr><td>04
*</td><td>Setup of over-travel inhibit input</td><td>0 to 2
<1></td><td>In linear drive application, you can use this over-travel inhibiting function to inhibit the motor to run to the direction specified by limit switches which are installed at both ends of the axis, so that you can prevent the work load from damaging the machine due to the over-travel. With this input, you can set up the action of over-travel inhibit input.
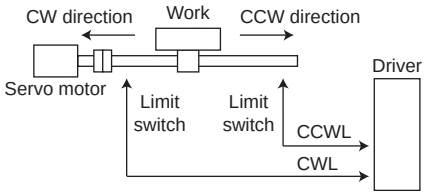

<table>
<tr><th>Setup value</th><th>CCWL/CWL input</th><th colspan="2">Input</th><th>Connection to COM–</th><th>Action</th></tr>
<tr><td rowspan="4">0</td><td rowspan="4">Valid</td><td rowspan="2">CCWL</td><td rowspan="2">(CN X5,Pin-9)</td><td>Close</td><td>Normal status while CCW-side limit switch is not activated.</td></tr>
<tr><td>Open</td><td>Inhibits CCW direction, permits CW direction.</td></tr>
<tr><td rowspan="2">CWL</td><td rowspan="2">(CN X5,Pin-9)</td><td>Close</td><td>Normal status while CW-side limit switch is not activated.</td></tr>
<tr><td>Open</td><td>Inhibits CW direction, CCW direction permitted.</td></tr>
<tr><td><1></td><td>Invalid</td><td colspan="4">Both CCWL and CWL inputs will be ignored, and over-travel inhibit function will be invalidated.</td></tr>
<tr><td>2</td><td>Valid</td><td colspan="4">Err38 (Over-travel inhibit input protection) is triggered when either one of the connection of CW or CCW inhibit input to COM– become open.</td></tr>
</table>
<Cautions>
1. When Pr04 is set to 0 and over-travel inhibit input is entered, the motor decelerates and stops according to the preset sequence with Pr66 (Sequence at over-travel inhibition). For details, refer to the explanation of Pr66.
2. When both of CCWL and CWL inputs are opened while Pr04 is set to 0, the driver trips with Err38 (Overtravel inhibit input error) judging that this is an error.
3. When you turn off the limit switch on upper side of the work at vertical axis application, the work may repeat up/down movement because of the loosing of upward torque. In this case, set up Pr66 to 2, or limit with the host controller instead of using this function.</td></tr>
<tr><td>07</td><td>Selection of speed monitor (SP)</td><td>0 to 9
<3></td><td>You can set up the content of analog speed monitor signal output (SP : CN X5, Pin43) and the relation between the output voltage level and the speed.
<table>
<tr><th>Setup value</th><th>Signal of SP</th><th>Relation between the output voltage level and the speed</th></tr>
<tr><td>0</td><td rowspan="5">Motor actual speed</td><td>6V / 47 r/min</td></tr>
<tr><td>1</td><td>6V / 188 r/min</td></tr>
<tr><td>2</td><td>6V / 750 r/min</td></tr>
<tr><td><3></td><td>6V / 3000 r/min</td></tr>
<tr><td>4</td><td>1.5V / 3000 r/min</td></tr>
<tr><td>5</td><td rowspan="5">Command speed</td><td>6V / 47 r/min</td></tr>
<tr><td>6</td><td>6V / 188 r/min</td></tr>
<tr><td>7</td><td>6V / 750 r/min</td></tr>
<tr><td>8</td><td>6V / 3000 r/min</td></tr>
<tr><td>9</td><td>1.5V / 3000 r/min</td></tr>
</table></td></tr>
</table>

Standard default : < >

<table>
<tr><th>PrNo.</th><th>Title</th><th>Setup range</th><th>Function/Content</th></tr>
<tr><td>08</td><td>Selection of torque monitor (IM)</td><td>0 to 12
<0></td><td>You can set up the content of the analog torque monitor of the signal output (IM : CN X5, Pin-42), and the relation between the output voltage level and torque or deviation pulse counts.
<table>
<tr><th>Setup value</th><th>Signal of IM</th><th>Relation between the output voltage level and torque or deviation pulse counts</th></tr>
<tr><td><0></td><td>Torque command</td><td>3V/rated (100%) torque</td></tr>
<tr><td>1</td><td rowspan="5">Position deviation</td><td>3V / 31Pulse</td></tr>
<tr><td>2</td><td>3V / 125Pulse</td></tr>
<tr><td>3</td><td>3V / 500Pulse</td></tr>
<tr><td>4</td><td>3V / 2000Pulse</td></tr>
<tr><td>5</td><td>3V / 8000Pulse</td></tr>
<tr><td>6</td><td rowspan="5">Full-closed deviation</td><td>3V / 31Pulse</td></tr>
<tr><td>7</td><td>3V / 125Pulse</td></tr>
<tr><td>8</td><td>3V / 500Pulse</td></tr>
<tr><td>9</td><td>3V / 2000Pulse</td></tr>
<tr><td>10</td><td>3V / 8000Pulse</td></tr>
<tr><td>11</td><td rowspan="2">Torque command</td><td>3V / 200% torque</td></tr>
<tr><td>12</td><td>3V / 400% torque</td></tr>
</table></td></tr>
<tr><td>09</td><td>Selection of TLC output</td><td>0 to 8
<0></td><td>You can assign the function of the torque in-limit output (TLC : CN X5 Pin-40).
<table>
<tr><th>Setup value</th><th>Function</th><th>Note</th></tr>
<tr><td><0></td><td>Torque in-limit output</td><td rowspan="9">For details of function of each output of the left, refer to the table of P.201, "Selection of TCL and ZSP outputs".</td></tr>
<tr><td>1</td><td>Zero speed detection output</td></tr>
<tr><td>2</td><td>Alarm output of either one of Over-regeneration /Over-load/Absolute battery/Fan lock/External scale</td></tr>
<tr><td>3</td><td>Over-regeneration alarm trigger output</td></tr>
<tr><td>4</td><td>Overload alarm output</td></tr>
<tr><td>5</td><td>Absolute battery alarm output</td></tr>
<tr><td>6</td><td>Fan lock alarm output</td></tr>
<tr><td>7</td><td>External scale alarm output</td></tr>
<tr><td>8</td><td>In-speed (Speed coincidence) output</td></tr>
</table></td></tr>
<tr><td>0A</td><td>Selection of ZSP output</td><td>0 to 8
<1></td><td>You can assign the function of the zero speed detection output (ZSP: CN X5 Pin-12).
<table>
<tr><th>Setup value</th><th>Function</th><th>Note</th></tr>
<tr><td>0</td><td>Torque in-limit output</td><td rowspan="9">For details of function of each output of the left, refer to the table of P.201, "Selection of TCL and ZSP outputs".</td></tr>
<tr><td><1></td><td>Zero speed detection output</td></tr>
<tr><td>2</td><td>Alarm output of either one of Over-regeneration /Over-load/Absolute battery/Fan lock/External scale</td></tr>
<tr><td>3</td><td>Over-regeneration alarm trigger output</td></tr>
<tr><td>4</td><td>Overload alarm output</td></tr>
<tr><td>5</td><td>Absolute battery alarm output</td></tr>
<tr><td>6</td><td>Fan lock alarm output</td></tr>
<tr><td>7</td><td>External scale alarm output</td></tr>
<tr><td>8</td><td>In-speed (Speed coincidence) output</td></tr>
</table></td></tr>
<tr><td>0B
*</td><td>Setup of absolute encoder</td><td>0 to 2
<1></td><td>You can set up the using method of 17-bit absolute encoder.
<table>
<tr><th>Setup value</th><th>Content</th></tr>
<tr><td>0</td><td>Use as an absolute encoder.</td></tr>
<tr><td><1></td><td>Use as an incremental encoder.</td></tr>
<tr><td>2</td><td>Use as an absolute encoder, but ignore the multi-turn counter over.</td></tr>
</table>
<Caution>
This parameter will be invalidated when 5-wire, 2500P/r incremental encoder is used.</td></tr>
<tr><td>0C
*</td><td>Baud rate setup of RS232 communication</td><td>0 to 5
<2></td><td>You can set up the communication speed of RS232.
• Error of baud rate is ±0.5%.
<table>
<tr><th>Setup value</th><th>Baud rate</th><th>Setup value</th><th>Baud rate</th></tr>
<tr><td>0</td><td>2400bps</td><td>3</td><td>19200bps</td></tr>
<tr><td>1</td><td>4800bps</td><td>4</td><td>38400bps</td></tr>
<tr><td><2></td><td>9600bps</td><td>5</td><td>57600bps</td></tr>
</table></td></tr>
</table>

Standard default : < >

<table>
<tr><th>PrNo.</th><th>Title</th><th>Setup range</th><th>Function/Content</th></tr>
<tr><td>0D
*</td><td>Baud rate setup of RS485 communication</td><td>0 to 5
<2></td><td>You can set up the communication speed of RS485.
• Error of baud rate is ±0.5%.
<table>
<tr><th>Setup value</th><th>Baud rate</th></tr>
<tr><td>0</td><td>2400bps</td></tr>
<tr><td>1</td><td>4800bps</td></tr>
<tr><td><2></td><td>9600bps</td></tr>
</table>
<table>
<tr><th>Setup value</th><th>Baud rate</th></tr>
<tr><td>3</td><td>19200bps</td></tr>
<tr><td>4</td><td>38400bps</td></tr>
<tr><td>5</td><td>57600bps</td></tr>
</table></td></tr>
<tr><td>0E
*</td><td>Setup of front panel lock</td><td>0 to 1
<0></td><td>You can limit the operation of the front panel to the monitor mode only.
You can prevent such a misoperation as unexpected parameter change.
<table>
<tr><th>Setup value</th><th>Content</th></tr>
<tr><td><0></td><td>Valid to all</td></tr>
<tr><td>1</td><td>Monitor mode only</td></tr>
</table>
<Note>
You can still change parameters via communication even though this setup is 1.
To return this parameter to 0, use the console or the "PANATERM®".</td></tr>
</table>

Parameters for Adjustment of Time Constants of Gains and Filters

Standard default : < >

PrNo.	Title	Setup range	Unit	Function/Content
10	1st gain of position loop	0 to 3000 A to C-frame:<63>* D to F-frame:<32>*	1/s	You can determine the response of the positional control system. Higher the gain of position loop you set, faster the positioning time you can obtain. Note that too high setup may cause oscillation.
11	1st gain of velocity loop	1 to 3500 A to C-frame:<35>* D to F-frame:<18>*	Hz	You can determine the response of the velocity loop. In order to increase the response of overall servo system by setting high position loop gain, you need higher setup of this velocity loop gain as well. However, too high setup may cause oscillation. **<Caution>** When the inertia ratio of Pr20 is set correctly, the setup unit of Pr11 becomes (Hz).
12	1st time constant of velocity loop integration	1 to 1000 A to C-frame:<16>* D to F-frame:<31>*	ms	You can set up the integration time constant of velocity loop. Smaller the setup, faster you can dog-in deviation at stall to 0. The integration will be maintained by setting to "999". The integration effect will be lost by setting to "1000".
13	1st filter of speed detection	0 to 5 <0>*	–	You can set up the time constant of the low pass filter (LPF) after the speed detection, in 6 steps. Higher the setup, larger the time constant you can obtain so that you can decrease the motor noise, however, response becomes slow. Use with a default value of 0 in normal operation.
14	1st time constant of torque filter	0 to 2500 A to C-frame:<65>* D to F-frame:<126>*	0.01ms	You can set up the time constant of the 1st delay filter inserted in the torque command portion. You might expect suppression of oscillation caused by distortion resonance.
15	Velocity feed forward	–2000 to 2000 <300>*	0.1%	You can set up the velocity feed forward volume at position control. Higher the setup, smaller positional deviation and better response you can obtain, however this might cause an overshoot.
16	Time constant of feed forward filter	0 to 6400 <50>*	0.01ms	You can set up the time constant of 1st delay filter inserted in velocity feed forward portion. You might expect to improve the overshoot or noise caused by larger setup of above velocity feed forward.

<Notes>

- For parameters which No. have a suffix of "*", changed contents will be validated when you turn on the control power.
- Parameters which default values have a suffix of "*" will be automatically set up during real time auto-gain tuning. When you change manually, invalidate the real-time auto-gain tuning first then set, referring to P.239, "Release of Automatic Gain Adjusting Function" of Adjustment.

Parameter Setup

Standard default : < >

PrNo.	Title	Setup range	Unit	Function/Content
18	2nd gain of position loop	0 to 3000 A to C-frame:<73>* D to F-frame:<38>*	1/s	Position loop, velocity loop, speed detection filter and torque command filter have their 2 pairs of gain or time constant (1st and 2nd). For details of switching the 1st and the 2nd gain or the time constant, refer to P.226, "Adjustment". The function and the content of each parameter is as same as that of the 1st gain and time constant.
19	2nd gain of velocity loop	1 to 3500 A to C-frame:<35>* D to F-frame:<18>*	Hz	
1A	2nd time constant of velocity loop integration	1 to 1000 <1000>*	ms	
1B	2nd filter of velocity detection	0 to 5 <0>*	–	
1C	2nd time constant of torque filter	0 to 2500 A to C-frame:<65>* D to F-frame:<126>*	0.01ms	
1D	1st notch frequency	100 to 1500 <1500>	Hz	You can set up the frequency of the 1st resonance suppressing notch filter. The notch filter function will be invalidated by setting up this parameter to "1500".
1E	1st notch width selection	0 to 4 <2>	–	You can set up the notch filter width of the 1st resonance suppressing filter in 5 steps. Higher the setup, larger the notch width you can obtain. Use with default setup in normal operation.

Parameters for Auto-Gain Tuning

Standard default : < >

PrNo.	Title	Setup range	Unit	Function/Content
20	Inertia ratio	0 to 10000 <250>*	%	You can set up the ratio of the load inertia against the rotor (of the motor) inertia. Pr20= (load inertia/rotor inertia) X 100 [%] When you execute the normal auto-gain tuning, the load inertial will be automatically estimated after the preset action, and this result will be reflected in this parameter. The inertia ratio will be estimated at all time while the real-time auto-gain tuning is valid, and its result will be saved to EEPROM every 30 min. **<Caution>** If the inertia ratio is correctly set, the setup unit of Pr11 and Pr19 becomes (Hz). When the inertia ratio of Pr20 is larger than the actual, the setup unit of the velocity loop gain becomes larger, and when the inertia ratio of Pr20 is smaller than the actual, the setup unit of the velocity loop gain becomes smaller.
21	Setup of real-time auto-gain tuning	0 to 7 <1>	–	You can set up the action mode of the real-time auto-gain tuning. With higher setup such as 3 or 6, the driver respond quickly to the change of the inertia during operation, however it might cause an unstable operation. Use 1 or 4 for normal operation.For the vertical axis application, use with the setup of 4 to 6. When vibration occurs at gain switching, set up this to "7".

Setup value	Real-time auto-gain tuning	Varying degree of load inertia in motion
0	Invalid	–
<1>	Normal mode	Little change
2		Gradual change
3		Rapid change
4	Vertical axis mode	Little change
5		Gradual change
6		Rapid change
7	No gain switching	Little change

Standard default : < >

<table>
<tr><th>PrNo.</th><th>Title</th><th>Setup range</th><th>Unit</th><th>Function/Content</th></tr>
<tr><td>22</td><td>Selection of machine stiffness at real-time auto-gain tuning</td><td>0 to 15
A to C-frame:
<4>
D to F-frame:
<1></td><td>–</td><td>You can set up the machine stiffness in 16 steps while the real-time auto-gain tuning is valid.
low←machine stiffness→high
low← servo gain →high
Pr22 | 0, 1- - - - - - - - - - - - 14, 15
low← response →high
<Caution>
When you change the setup value rapidly, the gain changes rapidly as well, and this may give impact to the machine. Increase the setup gradually watching the movement of the machine.</td></tr>
<tr><td>23</td><td>Setup of adaptive filter mode</td><td>0 to 2
<1></td><td>–</td><td>You can set up the action of the adaptive filter.
0 : Invalid
1 : Valid
2 : Hold (holds the adaptive filter frequency when this setup is changed to 2.)
<Caution>
When you set up the adaptive filter to invalid, the adaptive filter frequency of Pr2F will be reset to 0. The adaptive filter is always invalid at the torque control mode.</td></tr>
<tr><td>24</td><td>Selection of damping filter switching</td><td>0 to 2
<0></td><td>–</td><td>You can select the switching method when you use the damping filter.
0 : No switching (both of 1st and 2nd are valid.)
1 : You can select either 1st or 2nd with damping control switching input (VS-SEL).
when VS-SEL is opened, 1st damping filter selection (Pr2B, 2C)
when VS-SEL is close, 2nd damping filter selection (Pr2D, 2E)
2 : You can switch with the position command direction.
CCW : 1st damping filter selection (Pr2B, 2C).
CW : 2nd damping filter selection (Pr2D, 2E).</td></tr>
<tr><td>25</td><td>Setup of an action at normal mode auto-gain tuning</td><td>0 to 7
<0></td><td>–</td><td>You can set up the action pattern at the normal mode auto-gain tuning.
<table>
<tr><th>Setup value</th><th>Number of revolution</th><th>Rotational direction</th></tr>
<tr><td><0></td><td rowspan="4">2 [revolution]</td><td>CCW → CW</td></tr>
<tr><td>1</td><td>CW → CCW</td></tr>
<tr><td>2</td><td>CCW → CCW</td></tr>
<tr><td>3</td><td>CW → CW</td></tr>
<tr><td>4</td><td rowspan="4">1 [revolution]</td><td>CCW → CW</td></tr>
<tr><td>5</td><td>CW → CCW</td></tr>
<tr><td>6</td><td>CCW → CCW</td></tr>
<tr><td>7</td><td>CW → CW</td></tr>
</table>
e.g.) When the setup is 0, the motor turns 2 revolutions to CCW and 2 revolutions to CW.</td></tr>
<tr><td>26</td><td>Setup of software limit</td><td>0 to 1000
<10></td><td>0.1 revolution</td><td>You can set up the movable range of the motor against the position command input range. When the motor movement exceeds the setup value, software limit protection of Pr34 will be triggered. This parameter is invalid with setup value of 0.</td></tr>
<tr><td>28</td><td>2nd notch frequency</td><td>100 to 1500
<1500></td><td>Hz</td><td>You can set up the 2nd notch width of the resonance suppressing filter in 5 steps. The notch filter function is invalidated by setting up this parameter to "1500".</td></tr>
<tr><td>29</td><td>Selection of 2nd notch width</td><td>0 to 4
<2></td><td>–</td><td>You can set up the notch width of 2nd resonance suppressing filter in 5 steps. Higher the setup, larger the notch width you can obtain.
Use with default setup in normal operation.</td></tr>
<tr><td>2A</td><td>Selection of 2nd notch depth</td><td>0 to 99
<0></td><td>–</td><td>You can set up the 2nd notch depth of the resonance suppressing filter. Higher the setup, shallower the notch depth and smaller the phase delay you can obtain.</td></tr>
</table>

<Notes>

- Parameters which default values have a suffix of "*" will be automatically set up during real time auto-gain tuning. When you change manually, invalidate the real-time auto-gain tuning first then set, referring to P.239, "Release of Automatic Gain Adjusting Function" of Adjustment.

Standard default : < >

PrNo.	Title	Setup range	Unit	Function/Content
2B	1st damping frequency	0 to 2000 <0>	0.1Hz	You can set up the 1st damping frequency of the damping control which suppress vibration at the load edge. The driver measures vibration at load edge. Setup unit is 0.1[Hz] . The setup frequency is 10.0 to 200.0[Hz] . Setup of 0 to 99 becomes invalid. Refer to P.250, "Damping control" as well before using this parameter.
2C	Setup of 1st damping filter	–200 to 2000 <0>	0.1Hz	While you set up Pr2B (1st damping frequency), set this up to smaller value when torque saturation occurs, and to larger value when you need faster action.Use with the setup of 0 in normal operation. Refer to P.250, "Damping control" of Adjustment. **<Caution>** Setup is also limited by 10.0[Hz] –Pr2B≦Pr2C≦Pr2B
2D	2nd damping frequency	0 to 2000 <0>	0.1Hz	You can set up the 2nd damping frequency of the damping control which suppress vibration at the load edge. The driver measures vibration at the load edge. Setup unit is 0.1 [Hz] . Setup frequency is 10.0 to 200.0 [Hz] . Setup of 0 to 99 becomes invalid. Refer to P.250, "Damping control" of Adjustment as well before using this parameter.
2E	Setup of 2nd damping filter	–200 to 2000 <0>	0.1Hz	While you set up Pr2D (2nd damping frequency), set this up to smaller value when torque saturation occurs, and to larger value when you need faster action. Use with the setup of 0 in normal operation. Refer to P.250, "Damping control" of Adjustment. **<Caution>** Setup is also limited by 10.0[Hz] –Pr2D≦Pr2E=Pr2D
2F	Adaptive filter frequency	0 to 64 <0>	–	Displays the table No. corresponding to the adaptive filter frequency. (Refer to P.234 of Adjustment.) This parameter will be automatically set and cannot be changed while the adaptive filter is valid. (when Pr23 (Setup of adaptive filter mode) is other than 0.) 0 to 4 Filter is invalid. 5 to 48 Filter is valid. 49 to 64 Filter validity changes according to Pr22. This parameter will be saved to EEPROM every 30 minutes while the adaptive filter is valid, and when the adaptive filter is valid at the next power-on, the adaptive action starts taking the saved data in EEPROM as an initial value. **<Caution>** When you need to clear this parameter to reset the adaptive action while the action is not normal, invalidate the adaptive filter (Pr23, "Setup of adaptive filter mode" to 0) once, then validate again. Refer to P.239, "Release of Automatic Gain Adjusting Function" of Adjustment as well.

Parameters for Adjustment (2nd Gain Switching Function)

Standard default : < >

PrNo.	Title	Setup range	Unit	Function/Content
30	Setup of 2nd gain	0 to 1 <1>*	–	You can select the PI/P action switching of the velocity control or 1st/2nd gain switching. Setup value: 0 — 1st gain (PI/P switching enabled) *1 <1>* — 1st/2nd gain switching enabled *2 *1 Switch the PI/P action with the gain switching input (GAIN CN X5, Pin-27). PI is fixed when Pr03 (Torque limit selection) is 3. GAIN input: Open with COM– → Action of velocity loop: PI action GAIN input: Connect to COM– → Action of velocity loop: P action *2 For switching condition of the 1st and the 2nd, refer to P.243, "Gain Switching Function" of Adjustment.

Standard default : < >

<table>
<tr><th>PrNo.</th><th>Title</th><th>Setup range</th><th>Unit</th><th>Function/Content</th></tr>
<tr><td>31</td><td>1st mode of control switching</td><td>0 to 10
<0>*</td><td>–</td><td>You can select the switching condition of 1st gain and 2nd gain while Pr30 is set to 1.
<table>
<tr><th>Setup value</th><th>Gain switching condition</th></tr>
<tr><td><0>*</td><td>Fixed to the 1st gain.</td></tr>
<tr><td>1</td><td>Fixed to the 2nd gain.</td></tr>
<tr><td>2 *1</td><td>2nd gain selection when the gain switching input is turned on. (Pr30 setup must be 1.)</td></tr>
<tr><td>3 *2</td><td>2nd gain selection when the toque command variation is larger than the setups of Pr33 (1st level of control switching) and Pr34 (1st hysteresis of control switching).</td></tr>
<tr><td>4 *2</td><td>Fixed to the 1st gain.</td></tr>
<tr><td>5 *2</td><td>2nd gain selection when the command speed is larger than the setups of Pr33 (1st level of control switching) and Pr34 (1st hysteresis at control switching).</td></tr>
<tr><td>6 *2</td><td>2nd gain selection when the positional deviation is larger than the setups of Pr33 (1st control switching level) and Pr34 (1st hysteresis of control switching).</td></tr>
<tr><td>7 *2</td><td>2nd gain selection when more than one command pulse exist between 166μs.</td></tr>
<tr><td>8 *2</td><td>2nd gain selection when the positional deviation counter value exceeds the setup of Pr60 (Positioning completer range).</td></tr>
<tr><td>9 *2</td><td>2nd gain selection when the motor actual speed exceeds the setup of Pr33 (1st level of control switching) and Pr34 (1at hysteresis of control switching) .</td></tr>
<tr><td>10 *2</td><td>Switches to the 2nd gain while the position command exists.
Switches to the 1st gain when no-position command status lasts for the setup of Pr32 [x 166μs] and the speed falls slower than the setups of Pr33-34[r/min] .</td></tr>
</table>
*1 Fixed to the 1st gain regardless of GAIN input, when Pr31 is set to 2 and Pr03 (Torque limit selection) is set to 3.
*2 For the switching level and the timing, refer to P.243, "Gain Switching Function" of Adjustment.</td></tr>
<tr><td>32</td><td>1st delay time of control switching</td><td>0 to 10000
<30>*</td><td>x 166μs</td><td>You can set up the delay time when returning from the 2nd to the 1st gain, while Pr31 is set to 3 or 5 to 10.</td></tr>
<tr><td>33</td><td>1st level of control switching</td><td>0 to 20000
<50>*</td><td>–</td><td>You can set up the switching (judging) level of the 1st and the 2nd gains, while Pr31 is set to 3, 5, 6. 9 and 10.
Unit varies depending on the setup of Pr31 (1st mode of control switching)</td></tr>
<tr><td>34</td><td>1st hysteresis of control switching</td><td>0 to 20000
<33>*</td><td>–</td><td>You can set up hysteresis width to be implemented above/below the judging level which is set up with Pr33. Unit varies depending on the setup of Pr31 (1st control switching mode). Definitions of Pr32 (Delay), Pr33 (Level) and Pr34 (Hysteresis) are explained in the fig. below.
 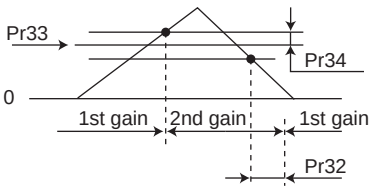

<Caution>
The setup of Pr33 (Level) and Pr34 (Hysteresis) are valid as absolute values (positive/negative).</td></tr>
<tr><td>35</td><td>Switching time of position gain</td><td>0 to 10000
<20>*</td><td>(setup value + 1) x 166μs</td><td>You can setup the step-by-step switching time to the position loop gain only at gain switching while the 1st and the 2nd gain switching is valid.
<Caution>
The switching time is only valid when switching from small position gain to large position gain.
 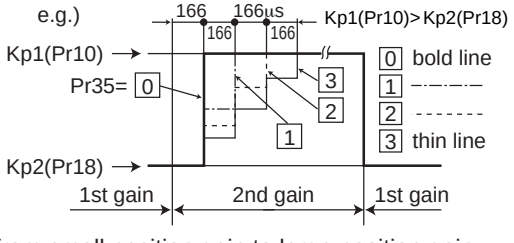
</td></tr>
<tr><td>3D</td><td>JOG speed setup</td><td>0 to 500
<300></td><td>r/min</td><td>You can setup the JOG speed.
Refer to P.75, "Trial Run"of Preparation.</td></tr>
</table>

<Notes>

- Parameters which default values have a suffix of "*" will be automatically set up during real time auto-gain tuning. When you change manually, invalidate the real-time auto-gain tuning first then set, referring to P.239, "Release of Automatic Gain Adjusting Function" of Adjustment.

Parameter Setup

Parameters for Position Control

Standard default : < >

<table>
<tr><th>PrNo.</th><th>Title</th><th>Setup range</th><th>Function/Content</th></tr>
<tr><td>40
*</td><td>Selection of command pulse input</td><td>0 to 1
<0></td><td>You can select either the photo-coupler input or the exclusive input for line driver as the command pulse input.
<table>
<tr><th>Setup value</th><th>Content</th></tr>
<tr><td><0></td><td>Photo-coupler input (X5 PULS1:Pin-3, PULS2:Pin-4, SIGN1:Pin-5, SIGN2:Pin-6)</td></tr>
<tr><td>1</td><td>Exclusive input for line driver (X5 PULSH1:Pin-44, PULSH2:Pin-45, SIGNH1:Pin-46, SIGNH2:Pin-47)</td></tr>
</table></td></tr>
<tr><td>41
*</td><td>Command pulse rotational direction setup</td><td>0 to 1
<0></td><td rowspan="2">You can set up the rotational direction against the command pulse input, and the command pulse input format.
<table>
<tr><th>Pr41 setup value (Command pulse rotational direction setup)</th><th>Pr42 setup value (Command pulse input mode setup)</th><th>Command pulse format</th><th>Signal title</th><th>CCW command</th><th>CW command</th></tr>
<tr><td rowspan="3"><0></td><td>0 or 2</td><td>90˚ phase difference 2-phase pulse (A + B-phase)</td><td>PULS
SIGN</td><td> 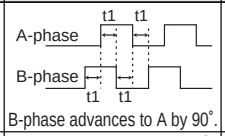
</td><td> 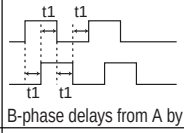
</td></tr>
<tr><td><1></td><td>CW pulse train
+
CCW pulse train</td><td>PULS
SIGN</td><td> 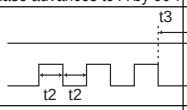
</td><td> 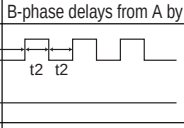
</td></tr>
<tr><td>3</td><td>pulse train
+
Signal</td><td>PULS
SIGN</td><td> 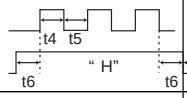
</td><td> 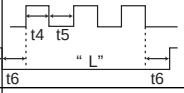
</td></tr>
<tr><td rowspan="3">1</td><td>0 or 2</td><td>90˚ phase difference 2-phase pulse (A + B-phase)</td><td>PULS
SIGN</td><td> 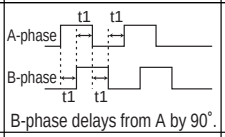
</td><td> 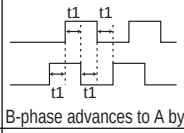
</td></tr>
<tr><td>1</td><td>CW pulse train
+
CCW pulse train</td><td>PULS
SIGN</td><td> 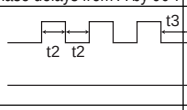
</td><td> 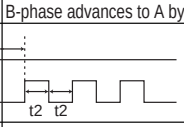 </td></tr>
<tr><td>3</td><td>pulse train
+
Signal</td><td>PULS
SIGN</td><td> 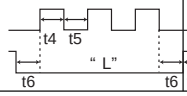
</td><td> 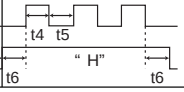
</td></tr>
</table>
• Permissible max. input frequency, and min. necessary time width of command pulse input signal.
<table>
<tr><th colspan="2" rowspan="2">Input I/F of PULS/SIGN signal</th><th rowspan="2">Permissible max. input frequency</th><th colspan="6">Min. necessary time width</th></tr>
<tr><th>t1</th><th>t2</th><th>t3</th><th>t4</th><th>t5</th><th>t6</th></tr>
<tr><td colspan="2">Pulse train interface exclusive to line driver</td><td>2Mpps</td><td>500ns</td><td>250ns</td><td>250ns</td><td>250ns</td><td>250ns</td><td>250ns</td></tr>
<tr><td rowspan="2">Pulse train interface</td><td>Line driver interface</td><td>500kpps</td><td>2μs</td><td>1μs</td><td>1μs</td><td>1μs</td><td>1μs</td><td>1μs</td></tr>
<tr><td>Open collector interface</td><td>200kpps</td><td>5μs</td><td>2.5μs</td><td>2.5μs</td><td>2.5μs</td><td>2.5μs</td><td>2.5μs</td></tr>
</table>
Make the rising/falling time of the command pulse input signal to 0.1μs or smaller.</td></tr>
<tr><td>42
*</td><td>Setup of command pulse input mode</td><td>0 to 3
<1></td></tr>
<tr><td>43</td><td>Invalidation of command pulse inhibit input</td><td>0 to 1
<1></td><td>You can select either the validation or the invalidation of the command pulse inhibit input (INH : CN X5 Pin-33).
<table>
<tr><th>Setup value</th><th>INH input</th></tr>
<tr><td>0</td><td>Valid</td></tr>
<tr><td><1></td><td>Invalid</td></tr>
</table>
Command pulse input will be inhibited by opening the connection of INH input to COM–. When you do not use INH input, set up Pr43 to 1 so that you may not need to connect INH (CN I/F Pin-33) and COM– (Pin-41) outside of the driver.</td></tr>
</table>

<Notes>

• For parameters which No. have a suffix of "*", changed contents will be validated when you turn on the control power.

Standard default : < >

<table>
<tr><th>PrNo.</th><th>Title</th><th>Setup range</th><th>Function/Content</th></tr>
<tr><td>44
*</td><td>Numerator of pulse output division</td><td>1 to 32767
<2500></td><td>You can set up the pulse counts to be fed out from the pulse outputs (X5 OA+ : Pin-21, OA–: Pin-22, OB+ : Pin-48, OB-: Pin-49).
• In case the external scale pulse is fed out
(When the control mode is full-closed control and Pr46 (Reversal of pulse output logic) is 2 or 3.)
Pr45 = 0 : No division will be executed.
When Pr45 is other than 0, travel per one pulse will be divided with discrete ratio according to the formula below.
Travel per one output pulse = Pr45 (Denominator of pulse output division) / Pr44 (Numerator of pulse output division) x travel per one pulse of external scale
<Cautions>
• Travel per one pulse of the external scale is 0.05 [É m] for AT500 series, and 0.5 [É m] for ST771 series.
• Setup of Pr44 > Pr45 becomes invalid. (In this case, no division will be executed)
• Z-phase will be fed out synchronizing with A-phase when the work crosses the zero absolute position at first time after the control power is turned on. After this, Z-phase will be fed out at the intervals set with Pr47 (Z-phase setup of external scale).</td></tr>
<tr><td>45
*</td><td>Denominator of pulse output division</td><td>0 to 32767
<0></td><td>• In case the encoder pulse is fed out
(When the control mode is position, velocity and torque control, and P446 (Reversal of pulse output logic) is 0 or 1.)
You can set up the pulse counts to be fed out from the pulse output (X5 0A+ : Pin-21, 0A- : Pin-22, 0B+ : Pin-48, 0B- : Pin-49).
• Pr45= <0> (Default)
You can set up the output pulse counts per one motor revolution for each OA and OB with the Pr44 setup. Therefore the pulse output resolution after quadruple can be obtained from the formula below.
The pulse output resolution per one revolution = Pr44 (Numerator of pulse output division) X4
• Pr45≠0 :
The pulse output resolution per one revolution can be divided by any ration according to the formula below.
Pulse output resolution per one revolution Pr44 (Numerator of pulse output division) / Pr45 (Denominator of pulse output division) x Encoder resolution
<Cautions>
• The encoder resolution is 131072 [P/r] for the 17-bit absolute encoder, and 10000 [P/r] for the 5-wire 2500P/r incremental encoder.
• The pulse output resolution per one revolution cannot be greater than the encoder resolution.
(In the above setup, the pulse output resolution equals to the encoder resolution.)
• Z-phase is fed out once per one revolution of the motor.
When the pulse output resolution obtained from the above formula is multiple of 4, Z-phase synchronizes with A-phase. In other case, the Z-phase width equals to output with the encoder resolution, and becomes narrower than A-phase, hence does not synchronize with A-phase.
when encoder resolution x Pr44/Pr45 is multiple of 4
 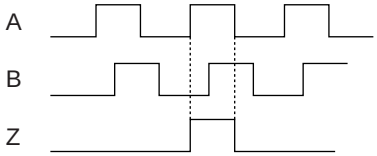

Synchronized
when encoder resolution x Pr44/Pr45 is not multiple of 4
 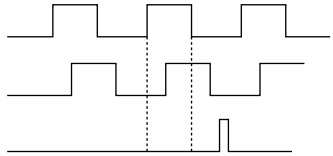

Not-synchronized</td></tr>
</table>

Parameter Setup

Standard default : < >

<table>
<tr><th>PrNo.</th><th>Title</th><th>Setup range</th><th>Function/Content</th></tr>
<tr><td>46
*</td><td>Reversal of pulse output logic</td><td>0 to 3
<0></td><td>You can set up the B-phase logic and the output source of the pulse output (X5 OB+ : Pin-48, OB– : Pin-49). With this parameter, you can reverse the phase relation between the A-phase pulse and the B-phase pulse by reversing the B-phase logic.
<table>
<tr><th>Setup value</th><th>A-phase (OA)</th><th>at motor CCW rotation</th><th>at motor CW rotation</th></tr>
<tr><td><0>, 2</td><td>B-phase(OB) non-reversal</td><td> 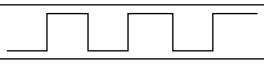 </td><td> 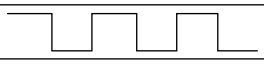 </td></tr>
<tr><td>1, 3</td><td>B-phase(OB) reversal</td><td> 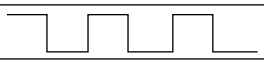 </td><td> 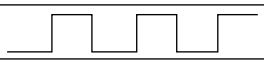 </td></tr>
</table>
<table>
<tr><th>Pr46</th><th>B-phase logic</th><th>Output source</th></tr>
<tr><td><0></td><td>Non-reversal</td><td>Encoder position</td></tr>
<tr><td>1</td><td>Reversal</td><td>Encoder position</td></tr>
<tr><td>2 *1</td><td>Non-reversal</td><td>External scale position</td></tr>
<tr><td>3 *1</td><td>Reversal</td><td>External scale position</td></tr>
</table>
*1 The output source of Pr46=2, 3 is valid only at full-closed control.</td></tr>
<tr><td>47
*</td><td>Z-phase setup of external scale</td><td>0 to 32767
<0></td><td>You can setup the interval of Z-phase output in the A-phase output pulses of the external scale (before quadruple), when you use the external scale as an output source for the pulse output. (Pr02, (Control mode setup) is 6 and Pr46 (Reversal of pulse output logic) is 2 or 3.)
• when Pr47 = <0> (default), no Z-phase is fed out of the external scale.
• when Pr47 = 1 to 32767, Z-phase will be fed out synchronizing with A-phase when the work crosses the absolute position of 0 at first time after the control power on. After this, Z-phase will be fed out at the intervals set with this parameter.</td></tr>
<tr><td>48</td><td colspan="3">Electronic gear function-related (Pr48 to 4B)</td></tr>
<tr><td></td><td>1st numerator of electronic gear</td><td>0 to 10000
<0></td><td rowspan="4">Electronic gear (Command pulse division/multiplication) function
• Purpose of this function
(1) You can set up any motor revolution and travel per input command unit.
(2) You can increase the nominal command pulse frequency when you cannot obtain the required speed due to the limit of pulse generator of the host controller.
• Block diagram of electronic gear
 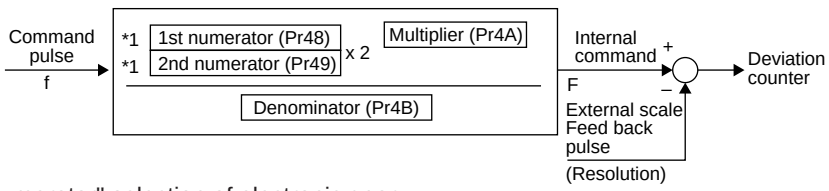

• "Numerator" selection of electronic gear
*1 : Select the 1st or the 2nd with the command electronic gear input switching (DIV : CN X5, Pin-28)
<table>
<tr><td>DIV input open</td><td>Selection of 1st numerator (Pr48)</td></tr>
<tr><td>DIV input connect to COM–</td><td>Selection of 2nd numerator (Pr49)</td></tr>
</table>
The electronic gear ratio is set with the formula below.
• when the numerator is <0> (Default) :Numerator (Pr48,49)X2^{Pr4A}) is automatically set equal to encoder resolution.
$\text{Electronic gear ratio} = \dfrac{\text{Encoder resolution}}{\text{Command pulse counts per one revolution (Pr48)}}$
• when numerator ≠ 0 :
$\text{Electronic gear ratio} = \dfrac{\text{Numerator of command electronic gear (Pr48,49)} \times 2^{\text{Multiplier of command div/multiple numerator (Pr4A)}}}{\text{Denominator of command electronic gear (Pr4B)}}$
<Caution>
In actual calculation of numerator (Pr48, Pr49) X2^{Pr4A}, 4194304 (Pr4D setup value +1) becomes the max. value.</td></tr>
<tr><td>49</td><td>2nd numerator of electronic gear</td><td>0 to 10000
<0></td></tr>
<tr><td>4A</td><td>Multiplier of electronic gear numerator</td><td>0 to 17
<0></td></tr>
<tr><td>4B</td><td>Denominator of electronic gear</td><td>0 to 10000
<10000></td></tr>
</table>

Standard default : < >

<table>
<tr><th>PrNo.</th><th>Title</th><th>Setup range</th><th>Function/Content</th></tr>
<tr><td>4C</td><td>Setup of primary delay smoothing</td><td>0 to 7
<1></td><td>Smoothing filter is the filter for primary delay which is inserted after the electronic gear.
Purpose of smoothing filter
• Reduce the step motion of the motor while the command pulse is rough.
• Actual examples which cause rough command pulse are;
(1) when you set up a high multiplier ratio (10 times or more).
(2) when the command pulse frequency is low.
You can set the time constant of the smoothing filter in 8 steps with Pr4C.
<table>
<tr><th>Setup value</th><th>Time constant</th></tr>
<tr><td>0</td><td>No filter function</td></tr>
<tr><td><1></td><td>Time constant small</td></tr>
<tr><td>|</td><td>↓</td></tr>
<tr><td>7</td><td>Time constant large</td></tr>
</table></td></tr>
<tr><td>4D
*</td><td>Setup of FIR smoothing</td><td>0 to 31
<0></td><td>You can set up the moving average times of the FIR filter covering the command pulse. (Setup value + 1) become average travel times.</td></tr>
<tr><td>4E</td><td>Counter clear input mode</td><td>0 to 2
<1></td><td>You can set up the clearing conditions of the counter clear input signal which clears the deviation counter.
<table>
<tr><th>Setup value</th><th>Clearing condition</th></tr>
<tr><td>0</td><td>Clears the deviation counter at level (shorting for longer than 100μs)*1</td></tr>
<tr><td><1></td><td>Clears the deviation counter at falling edge (open-shorting for longer than 100μs)*1</td></tr>
<tr><td>2</td><td>Invalid</td></tr>
</table>
*1 : Min. time width of CL signal
 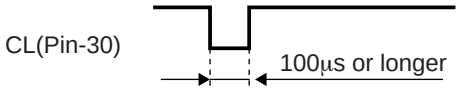
</td></tr>
</table>

<Notes>

• For parameters which No. have a suffix of "*", changed contents will be validated when you turn on the control power.

Parameter Setup

Parameters for Velocity and Torque Control

Standard default : < >

PrNo.	Title	Setup range	Unit	Function/Content
5E	1st torque limit setup	0 to 500 <500> *2	%	You can set up the limit value of the motor output torque (Pr5E : 1st torque, Pr5F : 2nd torque). For the torque limit selection, refer to Pr03 (Torque limit selection).
5F	2nd torque limit setup	0 to 500 <500> *2	%	This torque limit function limits the max. motor torque inside of the driver with parameter setup. In normal operation, this driver permits approx. 3 times larger torque than the rated torque instantaneously. If this 3 times bigger torque causes any trouble to the load (machine) strength, you can use this function to limit the max. torque. • Setup value is to be given in % against the rated torque. • Right fig. shows example of 150% setup with Pr03=1. • Pr5E limits the max. torque for both CCW and CW directions. 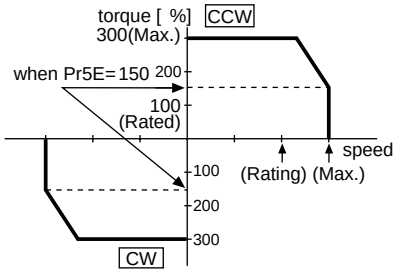 **<Caution>** You cannot set up a larger value to this parameter than the default setup value of "Max. output torque setup" of System parameter (which you cannot change through operation with PANATERM® or panel). Default value varies depending on the combination of the motor and the driver. For details, refer to P.57, "Setup of Torque Limit " of Preparation.

<Note>

• For parameters which default. has a suffix of "*2", value varies depending on the combination of the driver and the motor.

Parameters for Sequence

Standard default : < >

PrNo.	Title	Setup range	Unit	Function/Content
60	Positioning complete(In-position) range	0 to 32767 <131>	Pulse	You can set up the timing to feed out the positioning complete signal (COIN : CN X5, Pin-39). The positioning complete signal (COIN) will be fed out when the deviation counter pulse counts fall within ± (the setup value), after the command pulse entry is completed. The setup unit should be the encoder pulse counts at the position control and the external scale pulse counts at the full-closed control. • Basic unit of deviation pulse is encoder "resolution", and varies per the encoder as below. (1) 17-bit encoder : 2^{17} = 131072 (2) 2500P/r encoder : 4 X 2500 = 10000 **<Cautions>** 1. If you set up too small value to Pr60, the time until the COIN signal is fed might become longer, or cause chattering at output. 2. The setup of "Positioning complete range" does not give any effect to the final positioning accuracy. 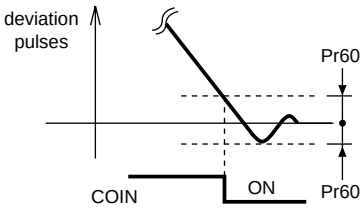

Standard default : < >

<table>
<tr><th>PrNo.</th><th>Title</th><th>Setup range</th><th>Unit</th><th>Function/Content</th></tr>
<tr><td>61</td><td>Zero-speed</td><td>10 to 20000 <50></td><td>r/min</td><td>You can set up the timing to feed out the zero-speed detection output signal (ZSP : CN X5, Pin-12 or TCL : CN X5, Pin-40) in rotational speed [r/min] .
The zero-speed detection signal (ZSP) will be fed out when the motor speed falls below the setup of this parameter, Pr61.
• The setup of P61 is valid for both CCW and CW direction regardless of the motor rotating direction.
• There is hysteresis of 10 [r/min] .
 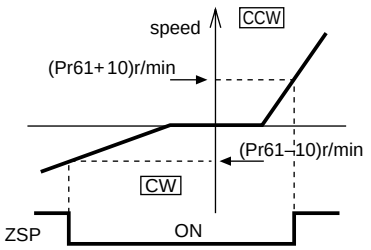
</td></tr>
<tr><td>63</td><td>Setup of positioning complete (In-position) output</td><td>0 to 3 <0></td><td>–</td><td>You can set up the action of the positioning complete signal (COIN : Pin-39 of CN X5) in combination with Pr60 (Positioning complete range).
<table>
<tr><th>Setup value</th><th>Action of positioning complete signal</th></tr>
<tr><td><0></td><td>The signal will turn on when the positional deviation is smaller than Pr60 (Positioning complete range)</td></tr>
<tr><td>1</td><td>The signal will turn on when there is no position command and the positional deviation is smaller than Pr60 (Positioning complete range).</td></tr>
<tr><td>2</td><td>The signal will turn on when there is no position command, the zero-speed detection signal is ON and the positional deviation is smaller than Pr60 (Positioning complete range).</td></tr>
<tr><td>3</td><td>The signal will turn on when there is no position command and the positional deviation is smaller than Pr60 (Positioning complete range). Then holds "ON" status until the next position command is entered.</td></tr>
</table></td></tr>
<tr><td>65</td><td>LV trip selection at main power OFF</td><td>0 to 1 <1></td><td>–</td><td>You can select whether or not to activate Err13 (Main power under-voltage protection) function while the main power shutoff continues for the setup of Pr6D (Main power-OFF detection time).
<table>
<tr><th>Setup value</th><th>Action of main power low voltage protection</th></tr>
<tr><td>0</td><td>When the main power is shut off during Servo-ON, Err13 will not be triggered and the driver turns to Servo-OFF. The driver returns to Servo-ON again after the main power resumption.</td></tr>
<tr><td><1></td><td>When the main power is shut off during Servo-ON, the driver will trip due to Err13 (Main power low voltage protection).</td></tr>
</table>
<Caution>
This parameter is invalid when Pr6D (Detection time of main power OFF)= 1000. Err13 (Main power under-voltage protection) is triggered when setup of P66D is long and P-N voltage of the main converter falls below the specified value before detecting the main power shutoff, regardless of the Pr65 setup. Refer to P.42, "Timing Chart-At Power-ON" of Preparation as well.</td></tr>
<tr><td>66 *</td><td>Sequence at over-travel inhibit</td><td>0 to 2 <0></td><td>–</td><td>You can set up the running condition during deceleration or after stalling, while over-travel inhibit input (CCWL : Connector CN X5, Pin-9 or CWL : Connector CN X5, Pin-8) is valid
<table>
<tr><th>Setup value</th><th>During deceleration</th><th>After stalling</th><th>Deviation counter content</th></tr>
<tr><td><0></td><td>Dynamic brake action</td><td>Torque command= 0 towards inhibited direction</td><td>Hold</td></tr>
<tr><td>1</td><td>Torque command= 0 towards inhibited direction</td><td>Torque command= 0 towards inhibited direction</td><td>Hold</td></tr>
<tr><td>2</td><td>Emergency stop</td><td>Torque command= 0 towards inhibited direction</td><td>Clears before/ after deceleration</td></tr>
</table>
<Caution>
In case of the setup value of 2, torque limit during deceleration will be limited by the setup value of Pr6E (Torque setup at emergency stop).</td></tr>
</table>

<Notes>

• For parameters which No. have a suffix of "*", changed contents will be validated when you turn on the control power.

Standard default : < >

<table>
<tr><th>PrNo.</th><th>Title</th><th>Setup range</th><th>Unit</th><th>Function/Content</th></tr>
<tr><td>67</td><td>Sequence at main power OFF</td><td>0 to 9
<0></td><td>–</td><td>When Pr65 (LV trip selection at main power OFF) is 0, you can set up,
1) the action during deceleration and after stalling
2) the clearing of deviation counter content
after the main power is shut off.
<table>
<tr><th rowspan="2">Setup value</th><th colspan="2">Action</th><th rowspan="2">Deviation counter content</th></tr>
<tr><th>During deceleration</th><th>After stalling</th></tr>
<tr><td><0></td><td>DB</td><td>DB</td><td>Clear</td></tr>
<tr><td>1</td><td>Free-run</td><td>DB</td><td>Clear</td></tr>
<tr><td>2</td><td>DB</td><td>Free-run</td><td>Clear</td></tr>
<tr><td>3</td><td>Free-run</td><td>Free-run</td><td>Clear</td></tr>
<tr><td>4</td><td>DB</td><td>DB</td><td>Hold</td></tr>
<tr><td>5</td><td>Free-run</td><td>DB</td><td>Hold</td></tr>
<tr><td>6</td><td>DB</td><td>Free-run</td><td>Hold</td></tr>
<tr><td>7</td><td>Free-run</td><td>Free-run</td><td>Hold</td></tr>
<tr><td>8</td><td>Emergency stop</td><td>DB</td><td>Clear</td></tr>
<tr><td>9</td><td>Emergency stop</td><td>Free-run</td><td>Clear</td></tr>
</table>
(DB: Dynamic Brake action)
<Caution>
In case of the setup value of 8 or 9, torque limit during deceleration will be limited by the setup value of Pr6E (Torque setup at emergency stop).</td></tr>
<tr><td>68</td><td>Sequence at alarm</td><td>0 to 3
<0></td><td>–</td><td>You can set up the action during deceleration or after stalling when some error occurs while either one of the protective functions of the driver is triggered.
<table>
<tr><th rowspan="2">Setup value</th><th colspan="2">Action</th><th rowspan="2">Deviation counter content</th></tr>
<tr><th>During deceleration</th><th>After stalling</th></tr>
<tr><td><0></td><td>DB</td><td>DB</td><td>Hold</td></tr>
<tr><td>1</td><td>Free-run</td><td>DB</td><td>Hold</td></tr>
<tr><td>2</td><td>DB</td><td>Free-run</td><td>Hold</td></tr>
<tr><td>3</td><td>Free-run</td><td>Free-run</td><td>Hold</td></tr>
</table>
(DB: Dynamic Brake action)
<Caution>
The content of the deviation counter will be cleared when clearing the alarm. Refer to P.43, "Timing Chart (When an error (alarm) occurs (at Servo-ON command status)" of Preparation.</td></tr>
<tr><td>69</td><td>Sequence at Servo-Off</td><td>0 to 9
<0></td><td>–</td><td>You can set up,
1) the action during deceleration and after stalling
2) the clearing of deviation counter content,
after turning to Servo-OFF (SRV-ON signal : CN X5, Pin-29 is turned from ON to OFF)
The relation between the setup value of Pr69 and the action/deviation counter clearance is same as that of Pr67 (Sequence at Main Power Off)
Refer to P.44, "Timing Chart"-Servo-ON/OFF action while the motor is at stall" of Preparation as well.</td></tr>
<tr><td>6A</td><td>Setup of mechanical brake action at stalling</td><td>0 to 100
<0></td><td>2ms</td><td>You can set up the time from when the brake release signal (BRK-OFF : CN X5, Pin-10 and 11) turns off to when the motor is de-energized (Servo-free), when the motor turns to Servo-OFF while the motor is at stall.
• Set up to prevent a micro-travel/ drop of the motor (work) due to the action delay time (tb) of the brake
• After setting up Pr6a ≧ tb, then compose the sequence so as the driver turns to Servo-OFF after the brake is actually activated.
 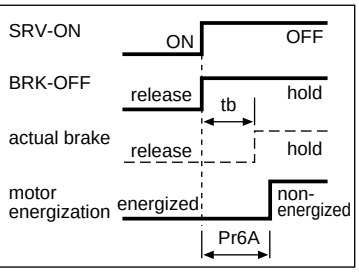

Refer to P.44, "Timing Chart"-Servo-ON/OFF Action While the Motor Is at Stall" of Preparation as well.</td></tr>
</table>

Standard default : < >

<table>
<tr><th>PrNo.</th><th>Title</th><th>Setup range</th><th>Unit</th><th>Function/Content</th></tr>
<tr><td>6B</td><td>Setup of mechanical brake action at running</td><td>0 to 100
<0></td><td>2ms</td><td>You can set up time from when detecting the off of Servo-ON input signal (SRV-ON : CN X5, Pin-29) is to when external brake release signal (BRK-OFF : CN X5, Pin-10 and 11) turns off, while the motor turns to servo off during the motor in motion.
• Set up to prevent the brake deterioration due to the motor running.
• At Servo-OFF during the motor is running, tb of the right fig. will be a shorter one of either Pr6B setup time, or time lapse till the motor speed falls below 30r/min.
 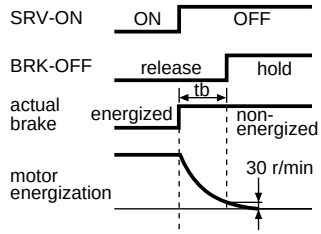
Refer to P.45, "Timing Chart"-Servo-ON/OFF action while the motor is in motion" of Preparation as well.</td></tr>
<tr><td>6C
*</td><td>Selection of external regenerative resistor</td><td>0 to 3
for
A, B-frame
<3>
for
C to F-frame
<0></td><td>–</td><td>With this parameter, you can select either to use the built-in regenerative resistor of the driver, or to separate this built-in regenerative resistor and externally install the regenerative resistor (between RB1 and RB2 of Connector CN X2 in case of A to D-frame, between P and B2 of terminal block in case of E, F-frame).
<table>
<tr><th>Setup value</th><th>Regenerative resistor to be used</th><th>Regenerative processing and regenerative resistor overload</th></tr>
<tr><td><0>
(C, D, E and F-frame)</td><td>Built-in resistor</td><td>Regenerative processing circuit will be activated and regenerative resistor overload protection will be triggered according to the built-in resistor (approx. 1% duty).</td></tr>
<tr><td>1</td><td>External resistor</td><td>The driver trips due to regenerative overload protection (Err18), when regenerative processing circuit is activated and its active ratio exceeds 10%,</td></tr>
<tr><td>2</td><td>External resistor</td><td>Regenerative processing circuit is activated, but no regenerative over-load protection is triggered.</td></tr>
<tr><td><3>
(A, B-frame)</td><td>No resistor</td><td>Both regenerative processing circuit and regenerative protection are not activated, and built-in capacitor handles all regenerative power.</td></tr>
</table>
<Remarks>
Install an external protection such as thermal fuse when you use the external regenerative resistor.
Otherwise, the regenerative resistor might be heated up abnormally and result in burnout, regardless of validation or invalidation of regenerative over-load protection.
<Caution>
When you use the built-in regenerative resistor, never to set up other value than 0. Don't touch the external regenerative resistor.
External regenerative resistor gets very hot, and might cause burning.</td></tr>
<tr><td>6D
*</td><td>Detection time of main power off</td><td>35 to 1000
<35></td><td>2ms</td><td>You can set up the time to detect the shutoff while the main power is kept shut off continuously.
The main power off detection is invalid when you set up this to 1000.</td></tr>
<tr><td>6E</td><td>Torque setup at emergency stop</td><td>0 to 500
<0></td><td>%</td><td>You can set up the torque limit in case of emergency stop as below.
• During deceleration of over-travel inhibit with the setup 2 of Pr66 (Sequence at over-travel inhibit input)
• During deceleration with the setup of 8 or 9 of Pr67 (Sequence at main power off)
• During deceleration with the setup of 8 or 9 of Pr69 (Sequence at Servo-OFF)
Normal torque limit is used by setting this to 0.</td></tr>
<tr><td>70</td><td>Setup of position deviation excess</td><td>0 to 32767
<25000></td><td>256 x resolution</td><td>• You can set up the excess range of position deviation.
• Set up with the encoder pulse counts at the position control and with the external scale pulse counts at the full-closed control.
• Err24 (Error detection of position deviation excess) becomes invalid when you set up this to 0.</td></tr>
</table>

<Notes>

• For parameters which No. have a suffix of "*", changed contents will be validated when you turn on the control power.

Parameter Setup

Standard default : < >

PrNo.	Title	Setup range	Unit	Function/Content
72	Setup of over-load level	0 to 500 <0>	%	• You can set up the over-load level. The overload level becomes 115 [%] by setting up this to 0. • Use this with 0 setup in normal operation. Set up other value only when you need to lower the over-load level. • The setup value of this parameter is limited by 115[%] of the motor rating.
73	Setup of over-speed level	0 to 20000 <0>	r/min	• You can set up the over-speed level. The over-speed level becomes 1.2 times of the motor max. speed by setting up this to 0. • Use this with 0 setup in normal operation. Set up other value only when you need to lower the over-speed level. • The setup value of this parameter is limited by 1.2 times of the motor max. speed. **<Caution>** The detection error against the setup value is ±3 [r/min] in case of the 7-wire absolute encoder, and ±36 [r/min] in case of the 5-wire incremental encoder.

Parameters for Full-Closed Control

Standard default : < >

PrNo.	Title	Setup range	Unit	Function/Content
78 *	Numerator of external scale division	0 to 32767 <0>	–	You can setup the ratio between the encoder resolution and the external scale resolution at full-closed control. $\frac{\text{Encoder resolution per one motor revolution}}{\text{External scale resolution per one motor revolution}} = \frac{\text{Pr78 X } 2^{\text{Pr79}}}{\text{Pr7A}}$ • Pr78= <0> (default) Numerator equals to encoder resolution, and you can setup the external scale resolution per one motor revolution with Pr7A. • Pr78 ≠ 0, Setup the ratio between the external scale resolution and the encoder resolution per one motor revolution according to the above formula. **<Caution>** • Upper limit of numerator value after calculation is 131072. Setup exceeding this value will be invalidated, and 131702 will be the actual numerator.
79 *	Multiplier of numerator of external scale division	0 to 17 <0>	–	
7A *	Denominator of external scale division	1 to 32767 <10000>	–	
7B *	Setup of hybrid deviation excess	1 to 10000 <100>	16 x external scale pulse	• You can setup the permissible gap (hybrid deviation) between the present motor position and the present external scale position. • The driver will trip with Err25 (Hybrid deviation excess protection) when the deviation is generated which exceeds the permissible gap.
7C *	Reversal of direction of external scale	0 to 1 <0>	–	You can set up the logic of the absolute data of the external scale. **Setup value** / **Content** 0: Serial data will increase when the detection head travels to the right viewed from the mounting side. (+ count) 1: Serial data will decrease when the detection head travels to the right viewed from the mounting side. (– count) **<Caution>** When you use the linear scale by other manufacture than Mitutoyo, position data will be kept as it is with the setup of 0, and it will become as a reversed signed position data with the setup of 1.

<Notes>

• For parameters which No. have a suffix of "*", changed contents will be validated when you turn on the control power.

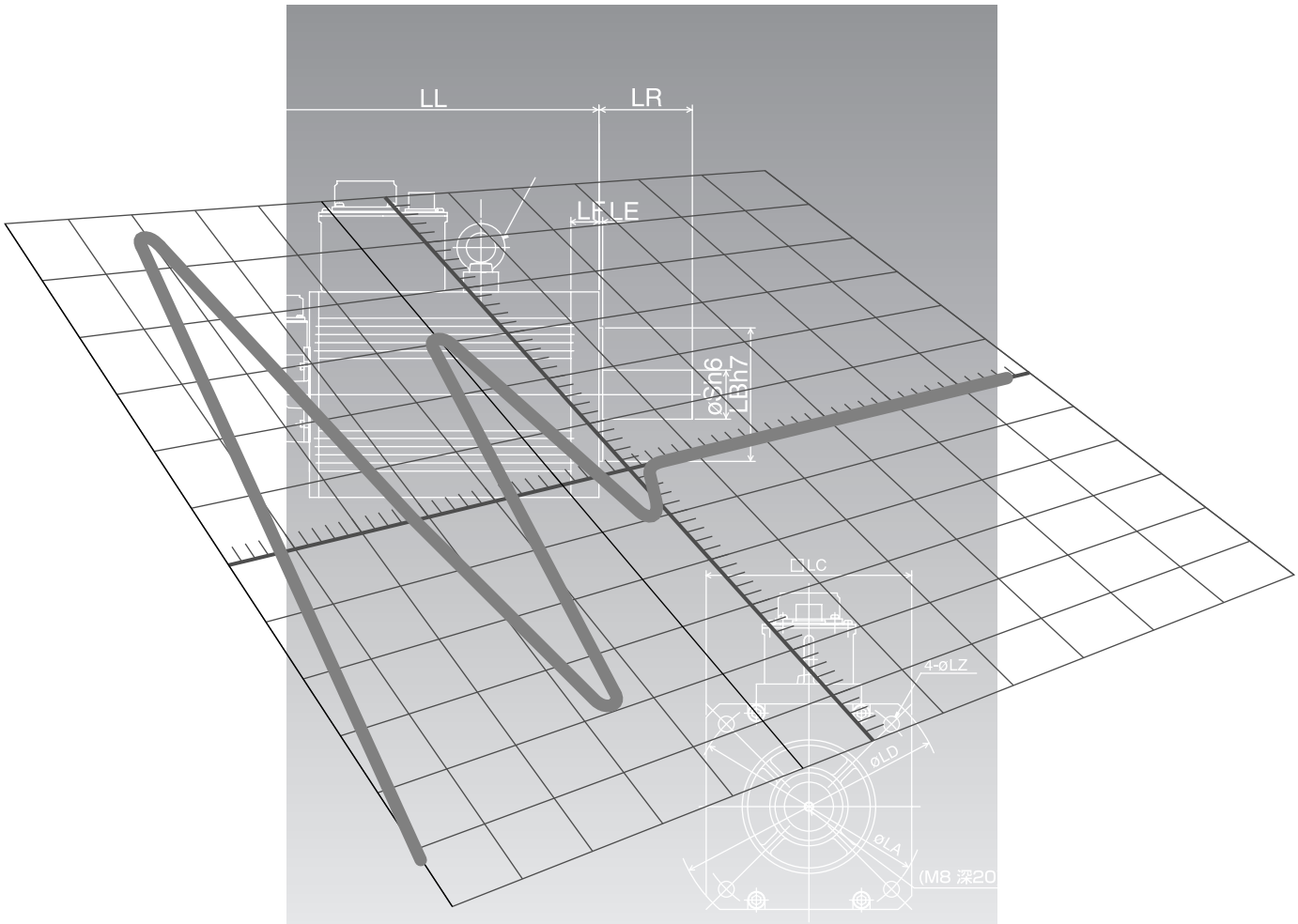

[Adjustment]

page

Gain Adjustment 226

Real-Time Auto-Gain Tuning 228

Fit-Gain Function 231

Adaptive Filter 234

Normal Auto-Gain Tuning 236

Release of Automatic Gain Adjusting Function . 239

Manual Auto-Gain Tuning (Basic) 240

Adjustment in Position Control Mode 241
Adjustment in Velocity Control Mode 241
Adjustment in Torque Control Mode 242
Adjustment in Full-Closed Control Mode 242
Gain Switching Function 243
Suppression of Machine Resonance 246
Automatic Gain Setup Function 248

Manual Auto-Gain Tuning (Application) 249

Instantaneous Speed Observer 249
Damping Control 250

Gain Adjustment

Purpose

It is required for the servo driver to run the motor in least time delay and as faithful as possible against the commands from the host controller. You can make a gain adjustment so that you can run the motor as closely as possible to the commands and obtain the optimum performance of the machine.

<e.g. : Ball screw>

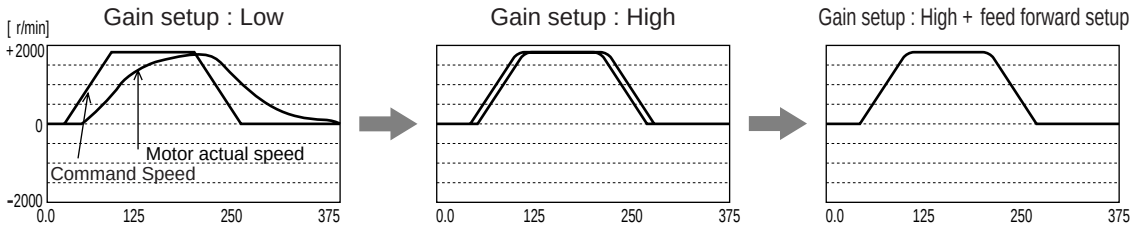

Position loop gain	: 20	Position loop gain	: 100	Position loop gain	: 100
Velocity loop gain	: 100	Velocity loop gain	: 50	Velocity loop gain	: 50
Time constant of V-loop integration	: 50	Time constant of V-loop integration	: 50	Time constant of V-loop integration	: 50
Velocity loop feed forward	: 0	Velocity loop feed forward	: 0	Velocity loop feed forward	: 500
Inertia ratio	: 100	Inertia ratio	: 100	Inertia ratio	: 100

Procedures

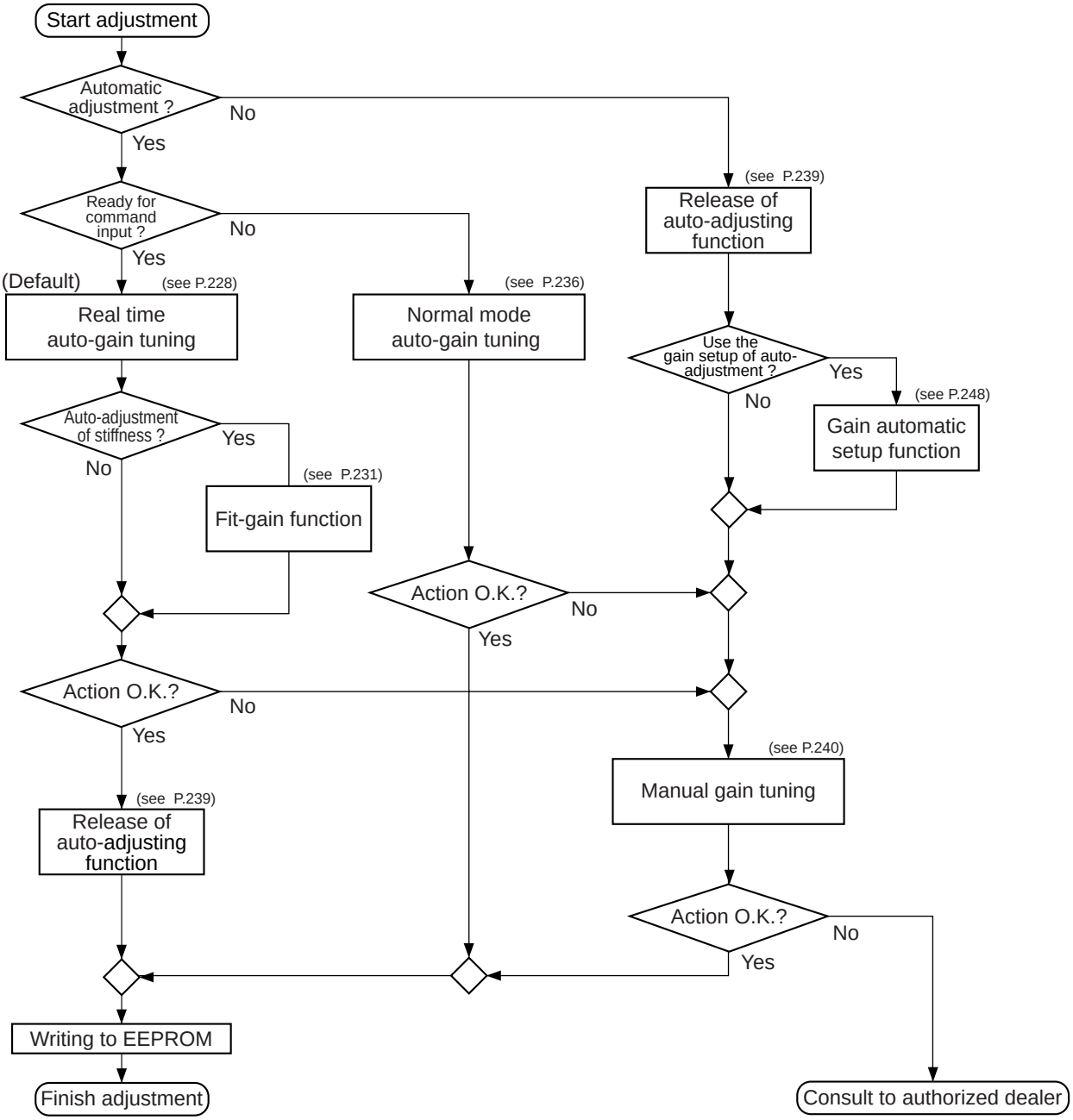

Type

Function			Explanation	Pages to refer
Automatic adjustment	Real-time auto-gain tuning		Estimates the load inertia of the machine in real time, and automatically sets up the optimum gain corresponding to this result.	P.228
		Fit-Gain function	Searches automatically the appropriate stiffness setup by entering the certain action pattern repeatedly, to set up the stiffness of real-time auto-gain tuning at position control.	P.231
	Adaptive filter		Reduces the resonance vibration point by automatically setting up the notch filter coefficient which removes the resonance component from the torque command while estimating the resonance frequency from the vibrating component which appears in the motor speed in actual operating condition.	P.234
	Normal mode auto-gain tuning		Sets up the appropriate gain automatically by calculating the load inertia from the torque required to run the motor in the command pattern automatically created in the driver.	P.236
	Release of automatic gain adjusting function		Describes the cautions when you invalidate the real-time auto-gain tuning or adaptive filter which are defaults.	P.239
Manual adjustment	Manual gain tuning (basic)		Execute the manual adjustment when real-time auto-gain tuning cannot be executed due to the limitation of control mode and load condition, or when you want to obtain an optimum response depending on each load.	P.240
		Basic procedure	Adjustment of position control mode	P.241
			Adjustment of velocity control mode	P.241
			Adjustment of torque control mode	P.242
			Adjustment of full-closed control mode	P.242
		Gain switching function	You can expect to reduce vibration at stopping and settling time and to improve command compliance by switching the gains by internal data or external signals.	P.243
		Suppression of machine resonance	When the machine stiffness is low, vibration or noise may be generated due to the distorted axis, hence you cannot set the higher gain. You can suppress the resonance with two kinds of filter.	P.246
		Automatic gain setup function	Initializes the control parameters and gain switching parameters to the values corresponding to the automatic tuning stiffness parameters, before executing the manual auto-gain tuning.	P.248
	Manual gain tuning (application)		You can obtain the higher performance while you are not satisfied with the performance obtained with the basic adjustment, using the following application functions.	P.249
		Instantaneous speed observer	Function which obtains both high response and reduction of vibration at stopping by estimating the motor speed with the load model, and hence improves the accuracy of speed detection.	P.249
		Damping control	Function which reduces vibration by removing the vibration frequency component while the front end of the machine vibrates.	P.250

<Remarks>

- Pay extra attention to safety, when oscillation (abnormal noise and vibration) occurs, shut off the main power, or turn to Servo-OFF.

Real-Time Auto-Gain Tuning Mode

Outline

Estimates the load inertia of the machine in real time and sets up the optimum gain automatically responding to the result.

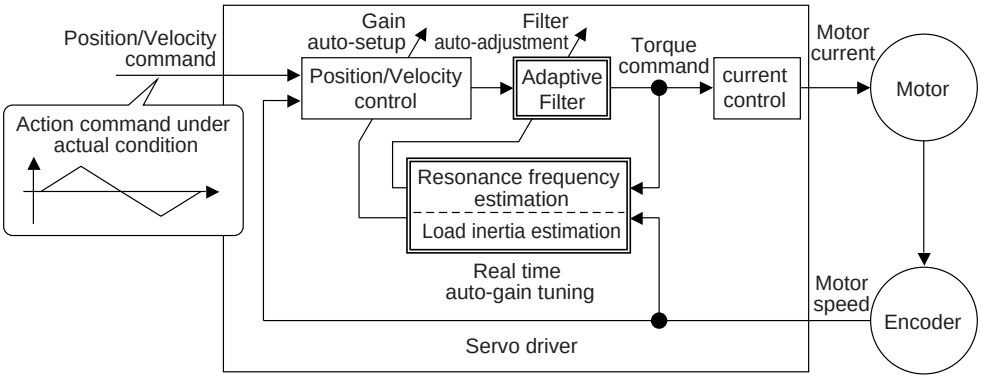

Applicable Range

Real time auto-gain tuning is applicable to all control modes.

Caution

Real-time auto-gain tuning may not be executed properly under the conditions described in the table below. In these cases, use the normal mode auto-gain tuning (refer to P.236 of Adjustment), or execute the manual auto-gain tuning (refer to P.240).

	Conditions which obstruct real-time auto-gain tuning action
Load inertia	• The load is too small or large compared to the rotor inertia. (less than 3 times or more than 20 times) • The load inertia changes too quickly (10 [s] or less)
Load	• The machine stiffness is extremely low. • A chattering such as backlash exists.
Action pattern	• The motor is running continuously at low speed of (100 [r/min] or lower. • Acceleration/deceleration is slow (2000 [r/min] per 1[s] or low). • Acceleration/deceleration torque is smaller than unbalanced weighted/viscous friction torque. • When the speed condition of 100 [r/min] or more and acceleration/deceleration condition of 2000 [r/min] per 1 [s] are not maintained for 80 [ms] .

How to Operate

1) Bring the motor to stall (Servo-OFF).
2) Set up Pr21 (Setup of real-time auto-gain tuning mode) to 1-7.

Setup value	Real time auto-gain tuning	Varying degree of load inertia in motion
0	(not in use)	–
[1]	normal mode	no change
2		slow change
3		rapid change
4	vertical axis mode	no change
5		slow change
6		rapid change
7	no gain switching mode	no change

When the changing degree of load inertia is large, set up 3 or 6.
When the motor is used for vertical axis, set up 4-6.
When vibration occurs during gain switching, set up 7.

3) Set up Pr22 (Machine stiffness at real-time auto-gain tuning) to 0 or smaller value.
4) Turn to Servo-ON to run the machine normally.
5) Gradually increase Pr22 (Machine stiffness at real-time auto-gain tuning, machine) when you want to obtain a better response. Lower the value (0-3) when you experience abnormal noise or oscillation.
6) Write the result to EEPROM when you want to save it.

Insert the console connector to CN X6 of the driver, then turn on the driver power.

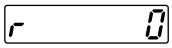

Setup of parameter, Pr21

Press (S SET).

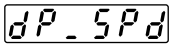

Press (M MODE).

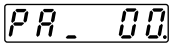

Match to the parameter No. to be set up with (▲) (▼). (Here match to Pr21.)

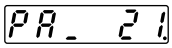

Press (S SET).

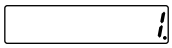

Change the setup with (▲) (▼).

Press (S SET).

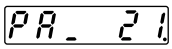

Setup of parameter, Pr22

Match to Pr22 with (▲).

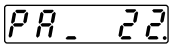

Press (S SET).

(default values)

Numeral increases with (▲), and decreases with (▼).

Press (S SET).

Writing to EEPROM

Press (M MODE).

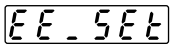

Press (S SET).

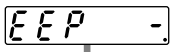

Bars increase as the right fig. shows by keep pressing (▲) (approx. 5sec).

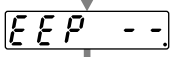

Writing starts (temporary display).

Finish

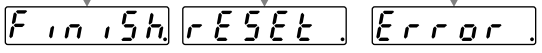

Writing completes

Writing error occurs

Return to SELECTION display after writing finishes, referring to "Structure of each mode"(P.60 and 61 of Preparation).

Real-Time Auto-Gain Tuning

Parameters Which Are Automatically Set

Following parameters are automatically adjusted.

PrNo.	Title
10	1st gain of position loop
11	1st gain of velocity loop
12	1st time constant of velocity loop integration
13	1st filter of velocity detection
14	1st time constant of torque filter
18	2nd gain of position loop
19	2nd gain of velocity loop
1A	2nd time constant of velocity loop integration
1B	2nd filter of speed detection
1C	2nd time constant of torque filter
20	Inertia ratio

Also following parameters are automatically set up.

PrNo.	Title	Setup value
15	Velocity feed forward	300
16	Time constant of feed forward filter	50
27	Setup of instantaneous speed observer	0
30	2nd gain setup	1
31	1st mode of control switching	10
32	1st delay time of control switching	30
33	1st level of control switching	50
34	1st hysteresis of control switching	33
35	Position gain switching time	20
36	2nd mode of control switching	0

<Notes>

- When the real-time auto-gain tuning is valid, you cannot change the parameters which are automatically adjusted.
- Pr31 becomes 10 at position or full closed control and when Pr21 (Setup of real-time auto-gain tuning) is 1 to 6, and becomes 0 in other cases.

Caution

(1) After the start-up, you may experience abnormal noise and oscillation right after the first Servo-ON, or increase of Pr22 (Selection of machine stiffness at real-time auto-gain tuning) until the load inertia is identified (estimated) or the adaptive filter is stabilized, however, these are not failures as long as they disappear immediately. If they persist over 3 reciprocating operations, take the following measures in possible order.

1) Write the parameters which have given the normal operation into EEPROM.
2) Lower the setup of Pr22 (Selection of machine stiffness at real time auto-gain tuning).
3) Set up the notch filter manually.

(2) When abnormal noise and oscillation occur, Pr20 (Inertia ratio) or Pr2F (Adaptive filter frequency) might have changed to extreme values. Take the same measures as the above in these cases.

(3) Among the results of real-time auto-gain tuning, Pr20 (Inertia ratio) and Pr2F (Adaptive filter frequency) will be written to EEPROM every 30 minutes. When you turn on the power again, the auto-gain tuning will be executed using the latest data as initial values.

(4) When you validate the real-time auto-gain tuning, Pr27 (Setup of instantaneous speed observer) will be invalidated (0) automatically.

(5) During the trial run and frequency characteristics measurement of "PANATERM®", the load inertia estimation will be invalidated.

Fit-Gain function

Outline

MINAS-A4 series features the Fit-gain function which executes the automatic setup of stiffness corresponding to the machine while the real time auto-gain tuning is used at position control. This function automatically searches the optimum stiffness setup by repeating reciprocating movement at position control.

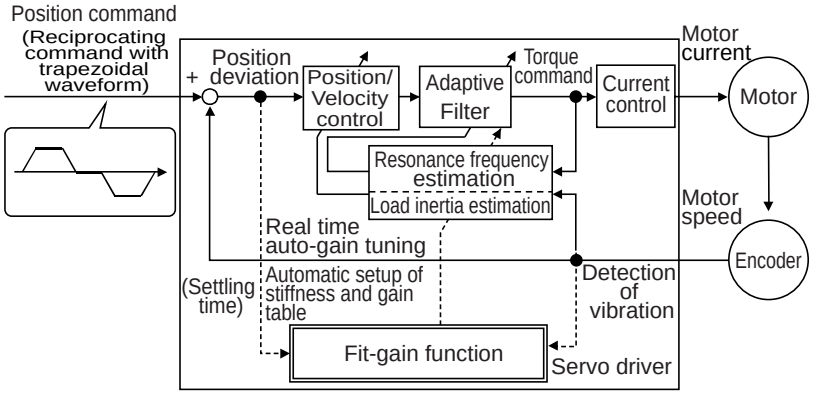

Applicable Range

This function can be applicable when the following conditions are satisfied in addition to the applicable conditions for real time auto-gain tuning.

	Conditions under which the Fit-gain function is activated
Real time auto-gain tuning action	• The real-time auto-gain tuning has to work properly. • At Servo-ON status • Pr21= 1-6 (Not usable when Pr21= 0 or 7)
Adaptive filter	• The adaptive filter is validated. • Pr23= 1 : Validated
Control mode	• At position control mode Pr02= 0 : Position control Pr02= 3 : 1st control mode of position/velocity control Pr02= 4 : 1st control mode of position/torque control
Action pattern	• The position command to be for reciprocating movement • One position command time to be 50 [ms] or longer. • Min. frequency of position command to be 1 [kpps] or more. (To be used for judgment of start and finish of command) 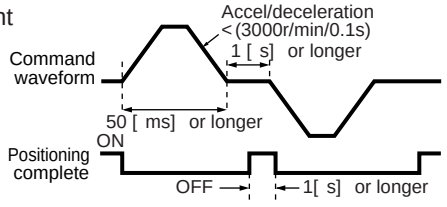

Caution

This function may not work properly under the following conditions in addition to the conditions for real time auto-gain tuning. In these cases, use the normal real-time auto-gain tuning.

	Conditions which obstruct Fit-Gain action
Action pattern	• The position command is small such as less than 2 revolutions. • When the positioning cannot be completed before the start of the next position command even though the positioning command has been completed. • Acceleration/deceleration is rapid such as 30000 [r/min] per 1[s] .

Real-Time Auto-Gain Tuning

Before Operation

Before the start-up of the Fit-Gain function, set up the followings with the Fit-Gain screen and parameter setup mode of the front panel, or the Console or the Setup Support Software, "PANATERM®".

Parameter	Setup value	Notes
Pr21 (Setup of real-time auto-gain tuning mode)	Either of 1-6. 1 Normal mode no change 2 Normal mode slow change 3 Normal mode rapid change 4 Vertical axis mode no change 5 Vertical axis mode slow change 6 Vertical axis mode rapid change	You can setup parameters in the left through the EXECUTION display of the Fit-Gain screen on the front panel. (Refer to P.72 of Preparation.)
Pr22 (Selection machine stiffness at real time auto-gain tuning)	0 : Real time stiffness No. 0	
Pr23 (Setup of adaptive filter)	1 : Valid	
Pr60 (Positioning complete range)	In case of 17bit encoder, 20 pulses or more, In case of 2500P/r encoder, 10 pulses or more,	

How to Operate

Procedures

(1) Bring the front panel display to EXECUTION display of the Fit-Gain screen.
(For operation of the front panel, refer to P.72 of Preparation.)

(2) Start up the Fit-Gain function by pressing ▼ for approx. 3sec after lowering the stiffness to 0 while the dot " . " on the right lower corner flashes.

(3) Enter the position command which satisfies the action pattern condition of P.228, "Applicable Range".

<Caution 1>
The Fit-Gain movement requires max. 50 reciprocating movements. The Fit-gain function finishes when the optimum real-time stiffness No. is found in normal case.

(4) Finish will be displayed when the Fit-Gain function finishes normally, and Error. will be displayed when this finishes with error.
(You can clear Error. display by operating any key.)

<Caution 2>
Error. will be displayed in the following cases.
- No chattering of COIN signal and real-time stiffness NO. without micro vibration, have been found.
- One of the keys of the front panel has been operated during the Fit-Gain action, or applicable condition have not been satisfied.

Example of front panel display

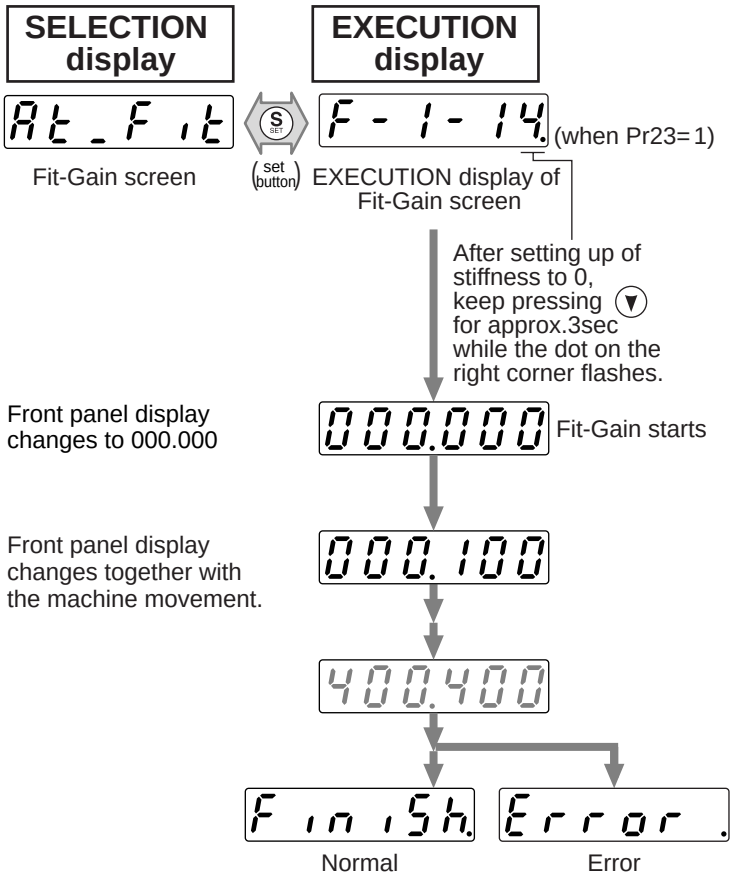

Result of Fit-Gain

F in iSh. will be displayed when the Fit-Gain finishes normally, and Error. will be displayed when it finishes with some error. Write the result to EEPROM when you want to apply the result after the power reset.

[EXECUTION display] Writing of the result from the Fit-Gain screen

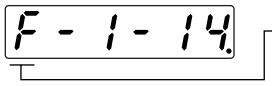

Press ▼ for approx.3sec to save the present setup to EEPROM.

Parameters Which Are Automatically Set

Following parameters are automatically adjusted.

PrNo.	Title
10	1st gain of position loop
11	1st gain of velocity loop
12	1st time constant of velocity loop integration
13	1st filter of velocity detection
14	1st time constant of torque filter time
18	2nd gain of position loop
19	2nd gain of velocity loop
1A	2nd time constant of velocity loop integration
1B	2nd filter of velocity detection
1C	2nd time constant of torque filter
20	Inertia ratio
22	Selection of machine stiffness at real time auto-gain tuning

Also following parameters are automatically set up.

PrNo.	Title	Setup value
15	Velocity feed forward	300
16	Time constant of feed forward filter	50
27	Setup of instantaneous speed observer	0
30	2nd gain setup	1
31	1st mode of control switching	10
32	1st delay time of control switching	30
33	1st level of control switching	50
34	1st Hysteresis of control switching	33
35	Switching time of position gain	20
36	2nd mode of control switching	0

Caution

During the Fit-Gain movement, you may experience some noise and vibration, however, these do not give any trouble since the gain is automatically lowered. If noise and vibration persist, interrupt the Fit-Gain by pressing one of the switches of the front panel.

Adaptive Filter

Outline

Estimates the resonance frequency out of vibration component presented in the motor speed in motion, then removes the resonance component from the torque command by setting up the notch filter coefficient automatically, hence reduces the resonance vibration.

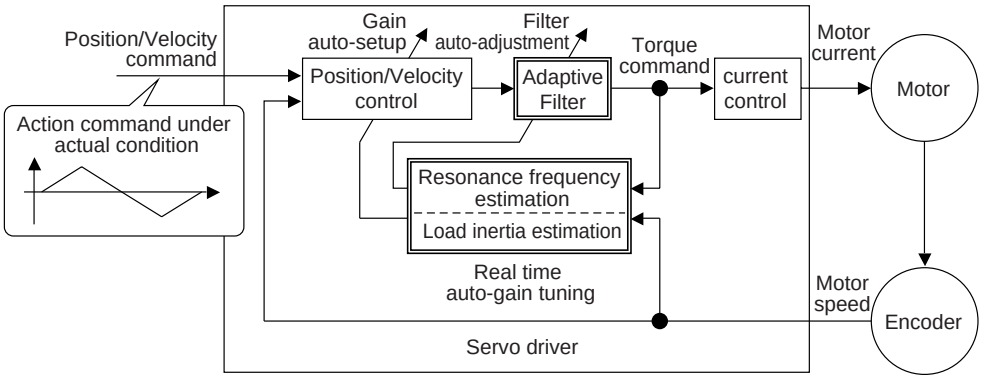

Applicable Range

This function works under the following condition.

	Conditions under which the Adaptive filter is activated
Control Mode	• Applies to other control modes than torque control.

Caution

The adaptive filter may not work properly under the following conditions. In these cases, take measures to resonance according to the manual adjustment procedures, using the 1st notch filter (Pr1D and 1E) and the 2nd notch filter (Pr28 to 2A).

	Conditions which obstruct adaptive filter action
Resonance point	• Resonance frequency is lower than 300[Hz] . • Resonance peak is low, or control gain is low where the motor speed is not affected by this. • Multiple resonance points exist.
Load	• Motor speed variation with high harmonic component is generated due to non-linear factors such as backlash.
Command pattern	• Acceleration/deceleration is rapid such as 30000[r/min] per 1[s] .

How to Operate

1) Validate the adaptive filter by setting up Pr23 (Setup of adaptive filter) to 1.
Adaptive filter automatically estimates the resonance frequency out of vibration component presented in the motor speed in motion, then removes the resonance components from the torque command by setting up the notch filter coefficient automatically, hence reduces the resonance vibration.

Setup value	Adaptive filter	Adaptive action
0	Invalid	-
[1]	Valid	Yes
2		No (Hold)

When adaptation finishes (Pr2F does not change), and resonance point seems not change, set up the value to 2.

2) Write the result to EEPROM when you want to save it.

Caution

(1) After the start-up, you may experience abnormal noise and oscillation right after the first Servo-ON, or when you increase the setup of Pr22 (Selection of machine stiffness at real-time auto-gain tuning), until the load inertia is identified (estimated) or the adaptive filter is stabilized, however, these are not failures as long as they disappear immediately. If they persist over 3 reciprocating operations, take the following measures in possible order.
   1) Write the parameters which have given the normal operation into EEPROM.
   2) Lower the setup of Pr22 (Selection of machine stiffness at real-time auto-gain tuning).
   3) Invalidate the adaptive filter by setting up Pr23 (Setup of adaptive filter mode) to 0. (Reset of inertia calculation and adaptive action)
   4) Set up the notch filter manually.

(2) When abnormal noise and oscillation occur, Pr2F (Adaptive filter frequency) might have changed to extreme values. Take the same measures as the above in these cases.

(3) Pr2F (Adaptive filter frequency) will be written to EEPROM every 30 minutes. When you turn on the power again, adaptive action will be executed using the latest data as initial values.

(4) The adaptive filter is normally invalidated at torque control, however, when you select torque control while you set up Pr02 (Control mode setup) to 4 and 5, the adaptive filter frequency before mode switching will be held.

Invalidation of Adaptive Filter

When you set up Pr23 (Setup of adaptive filter) to 0, the adaptive filter function which automatically follows the load resonance will be invalidated.
If you invalidate the adaptive filter which have been working correctly, noise and vibration may occur due to the effect of resonance which have been suppressed.
Therefore, execute the copying function of the setup of adaptive filter (Pr2F) to the 1st notch frequency (Pr1D) from the Fit-Gain screen of the front panel (refer to P.72, "Fit-Gain Screen" of Preparation), or set up Pr1D (1st notch frequency) manually by using the table below, then invalidate this filter.

Pr2F	1st notch frequency [Hz]
0	(invalid)
1	(invalid)
2	(invalid)
3	(invalid)
4	(invalid)
5	1482
6	1426
7	1372
8	1319
9	1269
10	1221
11	1174
12	1130
13	1087
14	1045
15	1005
16	967
17	930
18	895
19	861
20	828
21	796

Pr2F	1st notch frequency [Hz]
22	766
23	737
24	709
25	682
26	656
27	631
28	607
29	584
30	562
31	540
32	520
33	500
34	481
35	462
36	445
37	428
38	412
39	396
40	381
41	366
42	352
43	339

Pr2F	1st notch frequency [Hz]
44	326
45	314
46	302
47	290
48	279
49	269 (invalid when Pr22≧15)
50	258 (invalid when Pr22≧15)
51	248 (invalid when Pr22≧15)
52	239 (invalid when Pr22≧15)
53	230 (invalid when Pr22≧15)
54	221 (invalid when Pr22≧14)
55	213 (invalid when Pr22≧14)
56	205 (invalid when Pr22≧14)
57	197 (invalid when Pr22≧14)
58	189 (invalid when Pr22≧14)
59	182 (invalid when Pr22≧13)
60	(invalid)
61	(invalid)
62	(invalid)
63	(invalid)
64	(invalid)

*Set up 1500 to Pr1D (1st notch frequency) in case of " invalid " of the above table.

Normal Mode Auto-Gain Tuning

Outline

The motor will be driven per the command with a pattern generated by the driver automatically. The driver estimates the load inertia from the necessary torque, and sets up an appropriate gain automatically.

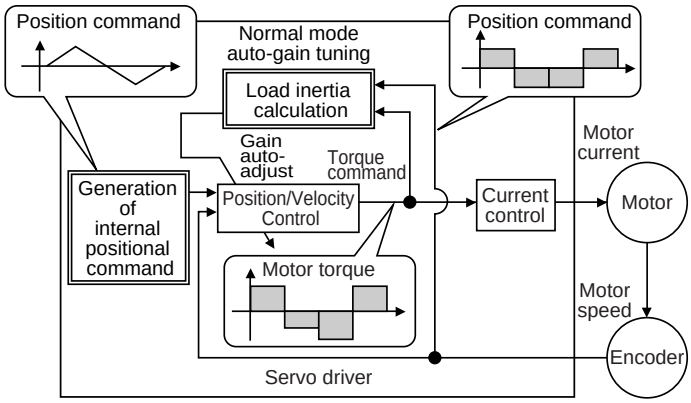

Applicable Range

This function works under the following condition.

	Conditions under which the normal mode auto-gain tuning is activated
Control mode	Applies to all control modes.
Others	• Servo-ON status • No entry of deviation counter clear signal

<Remarks>

Set up the torque limit selection (Pr03) to 1.

When you set up other than 1, driver may not act correctly.

Caution

Normal mode auto-gain tuning may not be work properly under the following conditions. In these cases, set up in manual gain tuning

	Conditions which obstruct normal auto-gain tuning
Load inertia	• Too small or too big compared to the rotor inertia (smaller than 3 times or larger than 20 times) • Load inertia varies.
Load	• Machine stiffness is extremely low. • Chattering such as backlash exists.

- Tuning error will be triggered when an error, Servo-OFF, the main power shutdown, validation of over-travel inhibition, or deviation counter clear occurs during the normal mode auto-gain tuning.
- If the load inertia cannot be calculated even though the normal mode auto-gain tuning is executed, gain value will not change and be kept as same as that of before the execution.
- The motor output torque during the normal auto-gain tuning is permitted to the max. torque set with Pr5E (Setup of torque limit).

Pay an extra attention to the safety. When oscillation occurs, shut off the main power or turn to Servo-OFF immediately. Bring back the gain to default with parameter setup. Refer to cautions of P.71, "Auto-Gain Tuning Mode" of Preparation as well.

Auto-Gain Tuning Action

(1) In the normal mode auto-gain tuning, you can set up the response with machine stiffness No..

> Machine stiffness No.
> • Represents the degree of machine stiffness of the customer's machine and have values from o to 15. You can set a higher No. to the high stiffness machine and set up a higher gain.
> • Usually start setting up with a lower value and increase gradually to repeat auto-gain tuning in the range where no oscillation, no abnormal noise, nor vibration occurs.

(2) This tuning repeats max. 5 cycles of the action pattern set with Pr25 (Normal mode auto-gain tuning action). Action acceleration will be doubled every one cycle after third cycle. Tuning may finish, or action acceleration does not vary before 5th cycle depending on the load, however, this is nor an error.

How to Operate

(1) Set up the action pattern with Pr25.
(2) Shift the load to the position where no hazard is expected even though the action pattern which is set with Pr25 is executed.
(3) Prohibit the command entry.
(4) Turn to Servo-ON.
(5) Start up the auto-gain tuning.
Use the front panel or the "PANATERM®".
For the operation of the front panel, refer to P.71, "Auto-Gain Tuning Mode" of Preparation.
(6) Adjust the machine stiffness to the level at which no vibration occurs and obtain the required response.
(7) Write the result to EEPROM, if it is satisfactory.

Parameters Which Are Automatically Set

Table of auto-gain tuning

Pr No.	Title	Stiffness value															
		0	**[1]**	**2**	**3**	**[4]**	**5**	**6**	**7**	**8**	**9**	**10**	**11**	**12**	**13**	**14**	**15**
10	1st gain of position loop	12	32	39	48	63	72	90	108	135	162	206	251	305	377	449	557
11	1st gain of velocity loop	9	18	22	27	35	40	50	60	75	90	115	140	170	210	250	310
12	1st time constant of velocity loop integration	62	31	25	21	16	14	12	11	9	8	7	6	5	4	4	3
13	1st filter of velocity detection	0	0	0	0	0	0	0	0	0	0	0	0	0	0	0	0
14	1st time constant of torque filter time *2	253	126	103	84	65	57	45	38	30	25	20	16	13	11	10	10
15	Velocity feed forward	300	300	300	300	300	300	300	300	300	300	300	300	300	300	300	300
16	Velocity FF filter	50	50	50	50	50	50	50	50	50	50	50	50	50	50	50	50
18	2nd gain of position loop	19	38	46	57	73	84	105	126	157	188	241	293	356	440	524	649
19	2nd gain of velocity loop	9	18	22	27	35	40	50	60	75	90	115	140	170	210	250	310
1A	2nd time constant of velocity loop integration	999	999	999	999	999	999	999	999	999	999	999	999	999	999	999	999
1B	2nd filter of speed detection	0	0	0	0	0	0	0	0	0	0	0	0	0	0	0	0
1C	2nd time constant of torque filter *2	253	126	103	84	65	57	45	38	30	25	20	16	13	11	10	10
20	Inertia ratio	Estimated load inertia ratio															
27	Setup of instantaneous velocity observer	0	0	0	0	0	0	0	0	0	0	0	0	0	0	0	0
30	2nd gain setup	1	1	1	1	1	1	1	1	1	1	1	1	1	1	1	1
31	1st mode of control switching *1	10	10	10	10	10	10	10	10	10	10	10	10	10	10	10	10
32	1st delay time of control switching	30	30	30	30	30	30	30	30	30	30	30	30	30	30	30	30
33	1st level of control switching	50	50	50	50	50	50	50	50	50	50	50	50	50	50	50	50
34	1st Hysteresis of control switching	33	33	33	33	33	33	33	33	33	33	33	33	33	33	33	33
35	Switching time of position gain	20	20	20	20	20	20	20	20	20	20	20	20	20	20	20	20
36	2nd mode of control switching	0	0	0	0	0	0	0	0	0	0	0	0	0	0	0	0

represents parameters with fixed value. Default for A to C-frame is 4, and 1 for D to F-frame.

*1 Stiffness value is 10 for position control and full-closed control, and 0 for velocity control and torque control.
*2 Lower limit for stiffness value is 10 for 17-bit encoder, and 25 for 2500P/r encoder.

Normal Mode Auto-Gain Tuning

How to Operate from the Front Panel

(1) Turn to the normal auto-gain tuning mode from the monitor mode, by pressing the SET button, then press the mode switching button three times. For details, refer to P.60 and 61, "Structure of Each Mode" of Preparation.

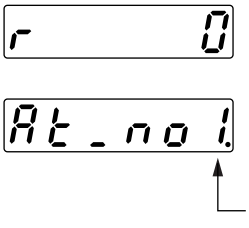

(2) Enter the machine stiffness No. by pressing ▲ ▼.

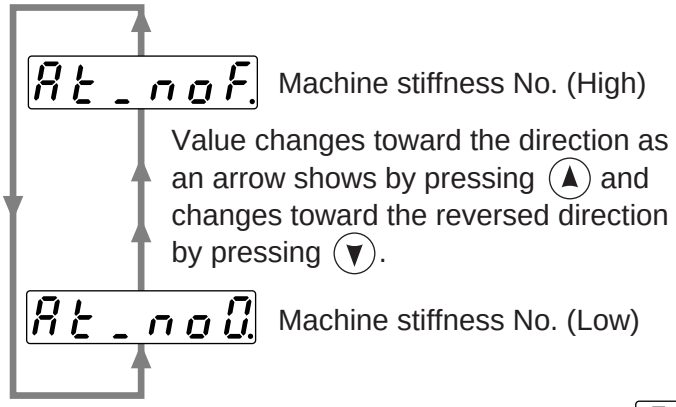

Drive method	Machine stiffness No.
Ball screw direct connection	8 –14
Ball screw + timing belt	6 –12
Timing belt	4 –10
Gear, Rack & Pinion	2 – 8
Others, low stiffness machine	0 – 8

(3) Shift to MONITOR/EXECUTION mode by pressing S SET.

(4) Operation at MONITOR/EXECUTION mode
Keep pressing ▲ until the display changes to StArt.
- Pin-29 of the connector, CN X5 to be Servo-ON status.

Keep pressing ▲ for approx.3sec, then bar increase as the right fig. shows.

The motor starts rotating.
For approx. 15 sec, the motor repeats max. 5 cycles of CCW/CW rotation, 2 revolutions each direction per one cycle.
Tuning may finish before 5th cycles, however, this is not an error.

(5) Write the gain value to EEPROM to prevent them from being lost due to the power shut off.

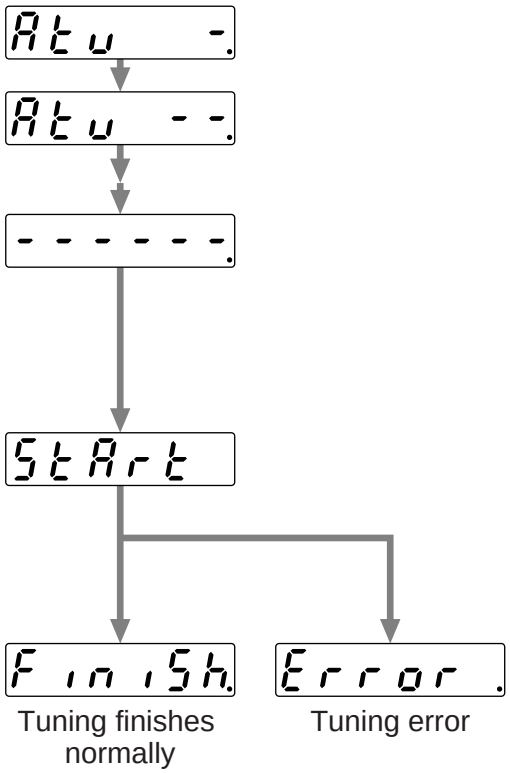

<Caution>

Do not use the normal mode auto-gain tuning with the motor and driver alone. Pr20 (Inertia ratio) becomes to 0.

<Notes>

Content	Cause	Measure
Display of error.	One of alarm, Servo-OFF or deviation counter clear has occurred.	• Avoid an operation near the limit switch or origin proximity switch. • Turn to Servo-ON. • Release the deviation counter clear
Value of parameter related to gain (such as Pr10) is kept as same as before the execution.	Load inertia cannot be identified.	• Lower Pr10 to 10 and Pr11 to 50, then execute the tuning. • Adjust the gain manually. (Calculate the load inertia, and then enter.)
Motor does not run.	CL (Pin-30) of CN X5 is entered.	Turn off the CL (Pin-30) of CN X5.

Release of Automatic Gain Adjusting Function [Adjustment]

Outline

Cautions are described when you want to invalidate the real time auto-gain tuning of default or the adaptive filter.

Caution

Execute the release of the automatic adjusting functions while all action stop (Servo-OFF)

Invalidation of Real-Time Auto-Gain Tuning

You can stop the automatic calculation of Pr20 (Inertial ratio) and invalidate the real-time auto-gain tuning by setting up Pr21 (Real-time auto-gain tuning setup) to 0.
Note that the calculation result of Pr20 (Inertia ratio) will be held, and if this parameter becomes abnormal value, use the normal mode auto-gain tuning or set up proper value manually obtained from formula or calculation.

Invalidation of Adaptive Filter

When you set up Pr23 (Setup of adaptive filter) to 0, adaptive filter function which automatically follows the load resonance will be invalidated.
If you invalidate the adaptive filter which have been working correctly, noise and vibration may occur due to the effect of resonance which have been suppressed.
Therefore, execute the copying function of the setup of adaptive filter (Pr2F) to the 1st notch frequency (Pr1D) from the Fit-gain screen of the front panel (refer to P.72, "Fit-Gain Screen" of Preparation), or set up Pr1D (1st notch frequency) manually by using the table below, then invalidate this filter.

Pr2F	1st notch frequency [Hz]
0	(invalid)
1	(invalid)
2	(invalid)
3	(invalid)
4	(invalid)
5	1482
6	1426
7	1372
8	1319
9	1269
10	1221
11	1174
12	1130
13	1087
14	1045
15	1005
16	967
17	930
18	895
19	861
20	828
21	796

Pr2F	1st notch frequency [Hz]
22	766
23	737
24	709
25	682
26	656
27	631
28	607
29	584
30	562
31	540
32	520
33	500
34	481
35	462
36	445
37	428
38	412
39	396
40	381
41	366
42	352
43	339

Pr2F	1st notch frequency [Hz]
44	326
45	314
46	302
47	290
48	279
49	269 (invalid when Pr22≧15)
50	258 (invalid when Pr22≧15)
51	248 (invalid when Pr22≧15)
52	239 (invalid when Pr22≧15)
53	230 (invalid when Pr22≧15)
54	221 (invalid when Pr22≧14)
55	213 (invalid when Pr22≧14)
56	205 (invalid when Pr22≧14)
57	197 (invalid when Pr22≧14)
58	189 (invalid when Pr22≧14)
59	182 (invalid when Pr22≧13)
60	(invalid)
61	(invalid)
62	(invalid)
63	(invalid)
64	(invalid)

*Set up 1500 to Pr1D (1st notch frequency) in case of “ invalid ” of the above table.

Manual Gain Tuning (Basic)

As explained previously, MINAS-A4 series features the automatic gain tuning function, however, there might be some cases where this automatic gain tuning cannot be adjusted properly depending on the limitation on load conditions. Or you might need to readjust the tuning to obtain the optimum response or stability corresponding to each load.
Here we explain this manual gain tuning method by each control mode and function.

Before Making a Manual Adjustment

You can adjust with the sound or motor (machine) movement by using the front panel or the console, however, you can adjust more securely by using wave graphic function of the setup support software, PANATERM®, or by measuring the analog voltage waveform using a monitoring function.

1. Analog monitor output

You can measure the actual motor speed, commanded speed, torque and deviation pulses by analog voltage level by using an oscilloscope. Set up the types of the signals or the output voltage level with Pr07 (Selection of speed monitor) and Pr08 (Selection of torque monitor).
For details, refer to P.41, "Wiring to the Connector, CN X5" of Preparation, and "Parameter Setup" of each control mode.

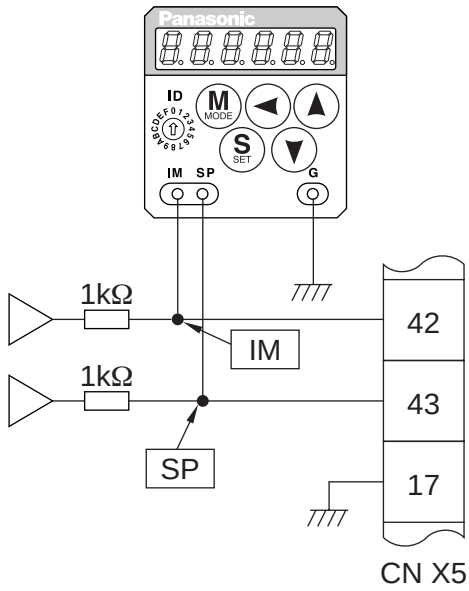

2. Waveform graphic function of the PANATERM®

You can display the command to the motor, motor movement (speed, torque command and deviation pulses) as a waveform graphic on PC display. Refer to P.276, "Outline of the Setup Support Software, PANATERM®" of Supplement.

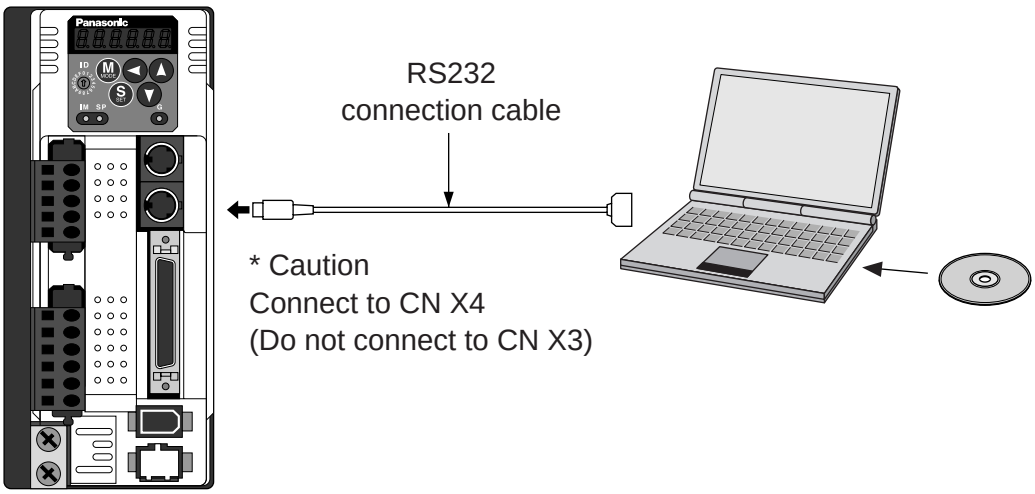

Adjustment in Position Control Mode

Position control of MINAS-A4 series is described in Block diagram of P.82.
Make adjustment in position control per the following procedures.

(1) Set up the following parameters to the values of the table below.

Parameter No. (Pr☐☐)	Title of parameter	Standard value
10	1st gain of position loop	27
11	1st gain of velocity loop	15
12	1st time constant of velocity loop integration	37
13	1st filter of velocity detection	0
14	1st time constant of torque filter time	152
15	Velocity feed forward	0
16	Time constant of feed forward filter	0
18	2nd gain of position loop	27
19	2nd gain of velocity loop	15
1A	2nd time constant of velocity loop integration	37
1B	2nd filter of speed detection	0
1C	2nd time constant of torque filter	152
1D	Selection of 1st notch frequency	1500
1E	Selection of 1st notch width	2

Parameter No. (Pr☐☐)	Title of parameter	Standard value
20	Inertia ratio	100
21	Setup of real time auto-gain tuning mode	0
23	Adaptive filter setup mode	0
2B	1st damping frequency	0
2C	Setup of 1st damping filter	0
2D	2nd damping frequency	0
2E	Setup of 2nd damping filter	0
30	2nd gain setup	0
31	Mode of position control switching	0
32	Delay time of position control switching delay	0
33	Level of position control switching	0
34	Hysteresis at position control switching	0
35	Position gain switching time	0
4C	Setup of smoothing filter	1
4D	Setup of FIR filter	0

(2) Enter the inertia ratio of Pr20. Measure the ratio or setup the calculated value.
(3) Make adjustment using the standard values below.

Order	Parameter No. (Pr☐☐)	Title of parameter	Standard value	How to adjust
1	Pr11	1st gain of velocity loop	30	Increase the value within the range where no abnormal noise and no vibration occur. If they occur, lower the value.
2	Pr14	1st time constant of torque filter	50	When vibration occurs by changing Pr11, change this value. Setup so as to make Pr11 x Pr14 becomes smaller than 10000. If you want to suppress vibration at stopping, setup larger value to Pr14 and smaller value to Pr11. If you experience too large vibration right before stopping, lower than value of Pr14.
3	Pr10	1st gain of position loop	50	Adjust this observing the positioning time. Larger the setup, faster the positioning time you can obtain, but too large setup may cause oscillation.
4	Pr12	1st time constant of velocity loop integration	25	Setup this value within the range where no problem occurs. If you setup smaller value, you can obtain a shorter positioning time, but too small value may cause oscillation. If you setup too large value, deviation pulses do not converge and will be remained.
5	Pr15	Velocity feed forward	300	Increase the value within the range where no abnormal noise occurs. Too large setup may result in overshoot or chattering of position complete signal, hence does not shorten the settling time. If the command pulse is not even,you can improve by setting up Pr16 (Feed forward filter) to larger value.

Adjustment in Velocity Control Mode

Velocity control of MINAS-A4 series is described in Block Diagram of P.126 of Velocity Control Mode.
Adjustment in velocity control is almost same as that in position control described in "Adjustment in Position Control Mode", and make adjustments of parameters per the procedures except the gain setup of position loop and the setup of velocity feed forward.

Manual Gain Tuning (Basic)

Adjustment in Torque Control Mode

Torque control of MINAS-A4 series is described in P.160, "Block Diagram" of Torque Control Mode.
This torque control is based on velocity control while making the 4th speed of speed setup of Pr56 or SPR/SPL input as a speed limit. Here we explain the setup of speed limiting value.

• Setup of speed limiting value

Setup the speed limiting value to the 4th speed of speed setup (Pr56) (when torque command selection (Pr5B) is 0.) or to the analog speed command input (SPR/TRQR/SPL) (when torque command selection (Pr5B) is 1).

- When the motor speed approaches to the speed limiting value, torque control following the analog torque command shifts to velocity control based on the speed limiting value which will be determined by the 4th speed of speed setup (Pr56) or the analog speed command input (SPR/TRQR/SPL).
- In order to stabilize the movement under the speed limiting, you are required to set up the parameters according to the above-mentioned "Adjustment in Velocity Control Mode".
- When the speed limiting value = 4th speed of speed setup (Pr56) , the analog speed command input is too low or the velocity loop gain is too low, or when the time constant of the velocity loop integration is 1000 (invalid), the input to the torque limiting portion of the above fig. becomes small and the output torque may not be generated as the analog torque command.

Adjustment in Full-Closed Control Mode

Full-closed control of MINAS-A4 series is described in Block diagram of P.191 of Full-Closed Control.
Adjustment in full-closed control is almost same as that in position control described in P.241 " Adjustment in Position Control Mode" , and make adjustments of parameters per the procedures except cautions of P.190, " Outline of Full-Closed Control" (difference of command unit, necessity of position loop unit conversion and difference of electronic gear).
Here we explain the setup of external scale ratio, hybrid deviation excess and hybrid control at initial setup of full-closed control.

1) Setup of external scale ratio

Setup the external scale ratio using the numerator of external scale division (Pr78), the multiplier for numerator of external scale division (Pr79) and denominator of external scale division (Pr7A).

- Check the encoder pulse counts per one motor revolution and the external scale pulse counts per one motor revolution, then set up the numerator of external scale division (Pr78), the multiplier for numerator of external scale division (Pr79) and denominator of external scale division so that the following formula can be established.

$$\frac{\text{Pr78}\ \boxed{1} \times 2^{\text{Pr79}\boxed{17}}}{\text{Pr7A}\ \boxed{5000}} = \frac{\text{Number of encoder pulses per motor rotation}}{\text{Number of external scale pulses per motor rotation}}$$

- If this ratio is incorrect, a gap between the position calculated from the encoder pulse counts and that of calculated from the external scale pulse counts will be enlarged and hybrid deviation excess (Err.25) will be triggered when the work or load travels a long distance.
- When you set up Pr78 to 0, the encoder pulse counts will be automatically set up.

2) Setup of hybrid deviation excess

Set up the minimum value of hybrid deviation excess (Pt78) within the range where the gap between the motor (encoder) position and the load (external scale) position will be considered to be an excess.

- Note that the hybrid deviation excess (Error code No.25) may be generated under other conditions than the above 1), such as reversed connection of the external scale or loose connection of the motor and the load.

Caution

(1) Enter the command pulses based on the external scale reference.
(2) The external scales to used for full-closed control are as follows.
- AT500 series by Mitutoyo (Resolution 0.05[μm] , max. speed 2[m/s])
- ST771 by Mitutoyo (Resolution 0.5[μm] , max. speed 2[m/s])

(3) To prevent the runaway and damage of the machine due to the setup of the external scale, setup the hybrid deviation excess (Pr7B) to the appropriate value, in the unit of external scale resolution.

(4) **We recommend the external scale as 1/20 ≦ external scale ratio ≦ 20.**

If you setup the external scale ratio to smaller value than 50/position loop gain (Pr10 and 18), you may not be able to control by one pulse unit. If you set up too large external scale ratio, you may expect larger noise in movement.

Gain Switching Function

At manual gain tuning, you can set 2nd gain manually in addition to 1st gain and you can switch the gain depending on the various requirements of the action such cases as,

- you want to increase the response by increasing the gain in motion
- you want to increase the servo-lock stiffness by increasing the gain at stopping
- switch to the optimum gain according to the action mode
- lower the gain to suppress the vibration at stopping.

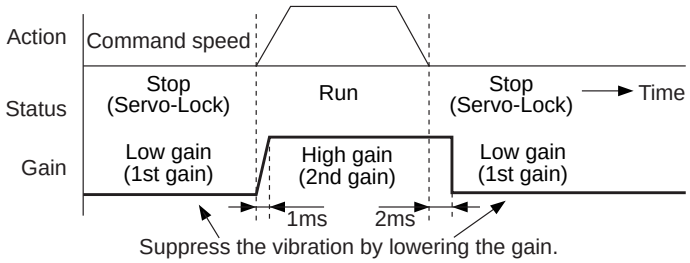

<Example>

Following is the example when you want to reduce the noise at motor in stall (Servo-Lock), by setting up to lower gain after the motor stops.

- Make adjustment referring to the auto-gain tuning table (P.237) as well.

Parameter No. (Pr☐☐)	Title of parameter	Execute manual gain-tuning without gain switching	Set up the same value as Pr10-14 (1st gain) to Pr18-1C (2nd gain)	Set up Pr30-35 (Gain switching condition)	Adjust P411 and 14 at stopping (1st gain)
10	1st gain of position loop	63			
11	1st gain of velocity loop	35			27
12	1st time constant of velocity integration	16			
13	1st filter of velocity detection	0			
14	1st time constant of torque filter	65			84
15	Velocity feed forward	300			
16	Filter of velocity feed forward	50			
18	2nd gain of position loop		63		
19	2nd gain of velocity loop		35		
1A	2nd time constant of velocity integration		16		
1B	2nd filter of velocity detection		0		
1C	2nd time constant of torque filter time		65		
30	Action setup of 2nd gain	0		1	
31	1st mode of control switching			7	
32	1st delay time of control switching			30	
33	1st level of control switching			0	
34	1st hysteresis of control switching			0	
35	Switching time of position gain			0	
20	Inertia ration	• Enter the known value from load calculation • Measure the inertia ratio by executing nor mal auto-gain tuning • Default is 250			

Manual Gain Tuning (Basic)

Setup of Gain Switching Condition

• Positing control mode, Full-closed control mode (○ : Corresponding parameter is valid, – : invalid)

Setup of gain switching condition			Setup parameters at position control, full-closed control		
			Delay time * 1	Level	Hysteresis *2
Pr31	Switching condition to 2nd gain	Fig.	Pr32	Pr33	Pr34
0	Fixed to 1st gain		-	-	-
1	Fixed to 2nd gain		-	-	-
2	Gain switching input, GAIN ON		-	-	-
3	Variation of torque command is large.	A	○	○ *3[0.05%/166μs]	○ *3[0.05%/166μs]
4	Fixed to 1st gain		-	-	-
5	Speed command is large.	C	○	○ [r/min]	○ [r/min]
6	Position deviation/Full-closed position deviation is large	D	○	○ *4[pulse]	○ *4[pulse]
7	Position command exists.	E	○	-	-
8	Not in positioning complete nor in full-closed positioning complete	F	○	-	-
9	Speed	C	○	○ [r/min]	○ [r/min]
10	Command exists + velocity	G	○	○ [r/min] *6	○ [r/min] *6

• Velocity control mode

Setup of gain switching condition			Setup parameters at velocity control mode		
			Delay time * 1	Level	Hysteresis * 2
Pr31,36	Switching condition to 2nd gain	Fig.	Pr32, 37	Pr33, 38	Pr34, 39
0	Fixed to 1st gain		-	-	-
1	Fixed to 2nd gain		-	-	-
2	Gain switching input, GAIN ON		-	-	-
3	Variation of torque command is large.	A	○	○*3 [0.05%/166μs]	○*3 [0.05%/166μs]
4	Variation of speed command is large.	B	○	○ *5 [10(r/min)/s]	○ *5 [10(r/min)/s]
5	Speed command is large.	C	○	○ [r/min]	○ [r/min]

• Torque control mode

Setup of gain switching condition			Setup parameters at torque control mode		
			Delay time * 1	Level	Hysteresis * 2
Pr31,36	Setup of gain switching condition	Fig.	Pr32, 37	Pr33, 38	Pr34, 39
0	Fixed to 1st gain		-	-	-
1	Fixed to 2nd gain		-	-	-
2	Gain switching input, GAIN ON		-	-	-
3	Variation of torque command is large.	A	○	○ *3 [0.05%/166μs]	○ *3 [0.05%/166μs]

*1 Delay time (Pr32 and 37) will be valid only when returning from 2nd to 1st gain.

*2 Hysteresis is defined as the fig. below shows.

*3 When you make it a condition that there is 10% torque variation during 166μs, set up the value to 200.
10%/166μs = Setup value 200 x [0.05%/166μs]

*4 Designate with either the encoder resolution or the external scale resolution depending on the control mode.

*5 When you make it a condition that there is speed variation of 10r/min in 1s, set up the value to 1.

*6 When Pr31=10, the meanings of delay time, level and hysteresis are different from the normal. (refer to Fig. G)

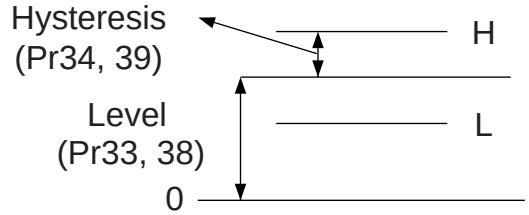

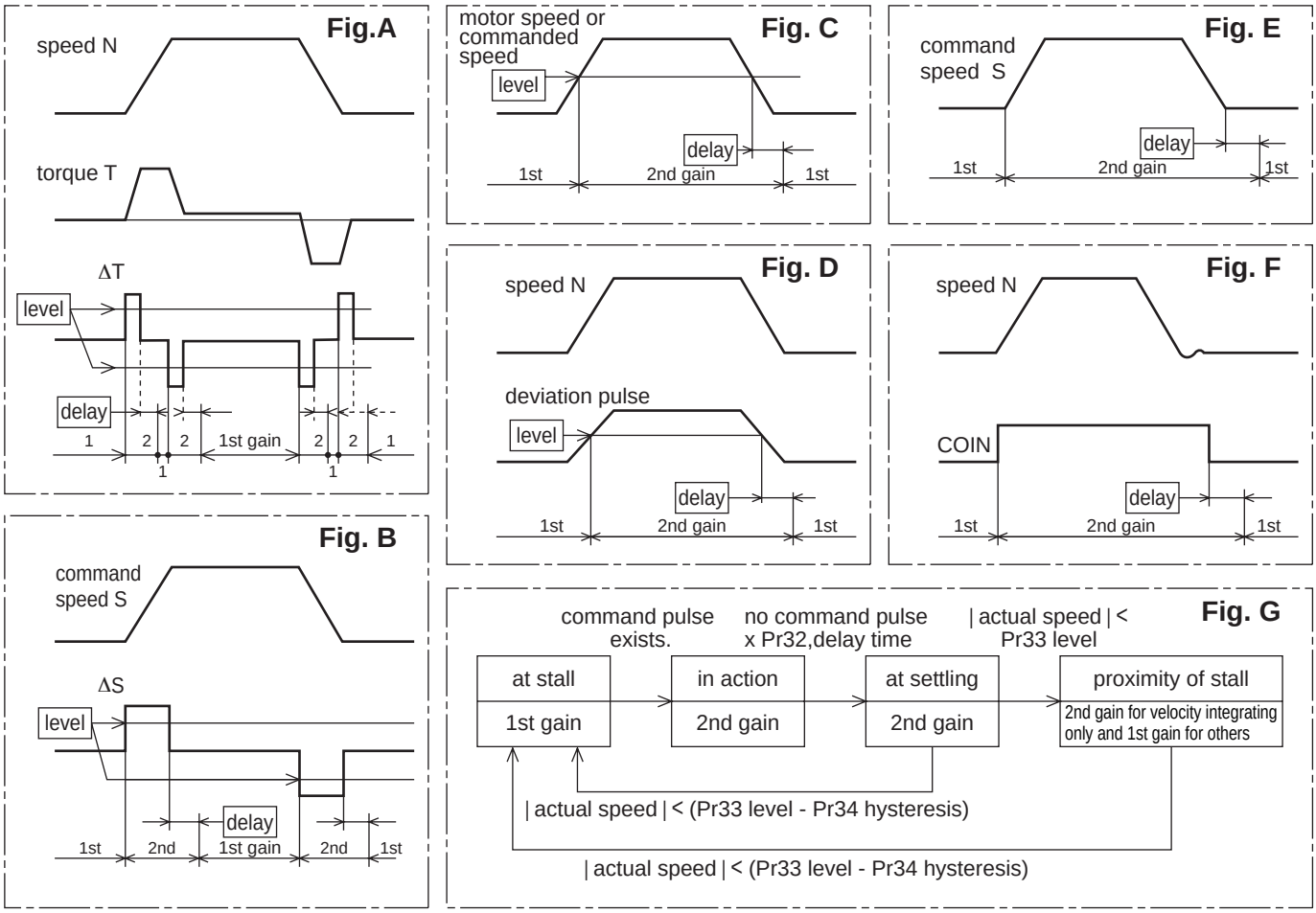

<Caution>

Above Fig. does not reflect a timing lag of gain switching due to hysteresis (Pr34 and 39).

Manual Gain Tuning (Basic)

Suppression of Machine Resonance

In case of a low machine stiffness, you cannot set up a higher gain because vibration and noise occur due to oscillation caused by axis distortion or other causes. You can suppress the resonance using two types of filter in these cases.

1. Torque command filter (Pr14 and Pr1C)

Sets up the filter time constant so as to damp the frequency at vicinity of resonance frequency
You can obtain the cut off frequency of the torque command filter in the following formula.
Cut off frequency (Hz) fc = 1 / (2π x parameter setup value x 0.00001)

2. Notch filter

• Adaptive filter (Pr23, Pr2F)

MINASA-4 series feature the adaptive filter. With this filter you can control vibration of the load which resonance points vary by machine by machine and normal notch filter or torque filter cannot respond. The adaptive filter is validated by setting up Pr23 (Adaptive filter mode setup) to 1.

Pr23	Setup of adaptive filter mode	1 : Adaptive filter is valid.
Pr2F	Adaptive filter frequency	Displays the table No, corresponding to adaptive filter frequency (not changeable)

• 1st and 2nd notch filter (Pr1D, 2E, 28, 29 and 2A)

MINASA-4 series feature 2 normal notch filters. You can adjust frequency and width with the 1st filter, and frequency, width and depth with the 2nd filter.

Pr1D	1st notch frequency	Set up lower a frequency by 10% from the measured one through frequency characteristics analysis of the PANATERM®.
Pr1E	1st notch width selection	Set up according to the resonance characteristics.
Pr28	2nd notch frequency	Set up lower a frequency by 10% from the measured one through frequency characteristics analysis of the PANATERM®.
Pr29	Selection of 2nd notch width	Set up according to the resonance characteristics.
Pr2A	Selection of 2nd notch depth	

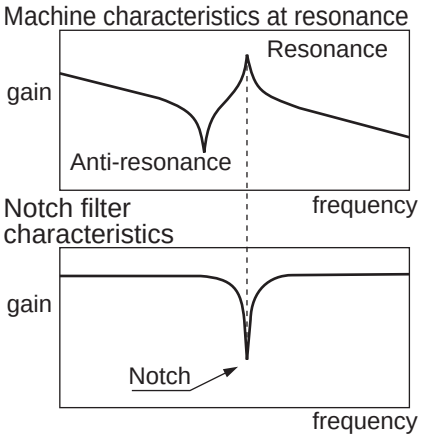

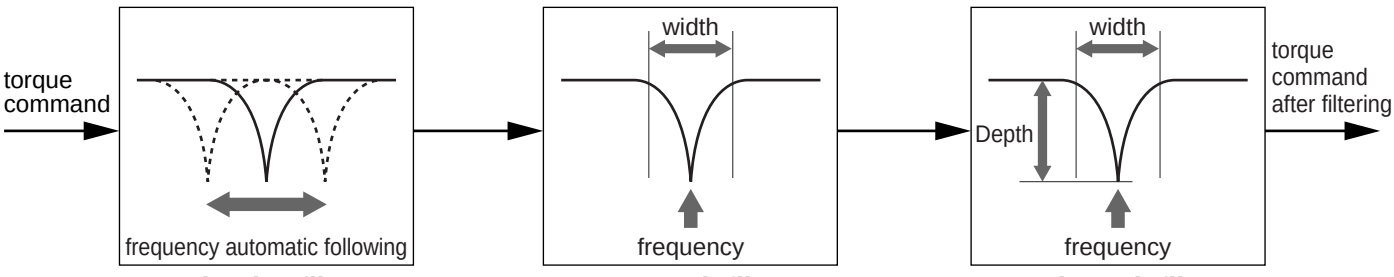

Adaptive filter
(Suppress resonance point instantaneously.)

1st notch filter
(Copying of the setup from the adaptive filter to 1st notch filter is enabled. (refer to P.253))

2nd notch filter
(Adjustment of frequency, width and depth is enabled.)

Example of application machine

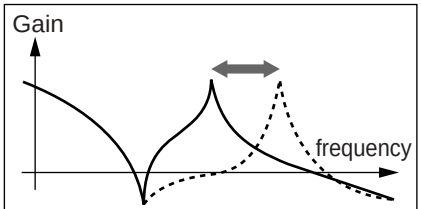

Machine which resonance point varies by each machine or by aging

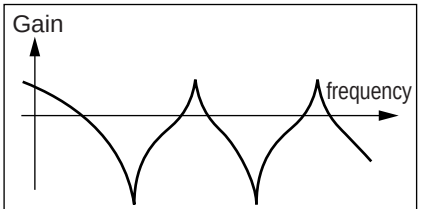

Machine which has multiple resonance points

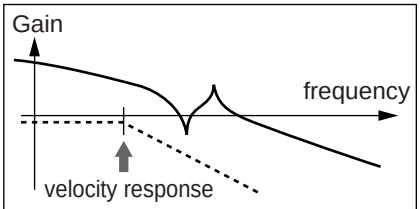

Machine which has small peak nearby velocity response

How to Check the Resonance Frequency of the Machine

(1) Start up the Setup Support Software, "PANATERM® " and bring the frequency characteristics measurement screen.
(2) Set up the parameters and measurement conditions. (Following values are standard.)
- Set up Pr11 (1st gain of velocity loop) to 25 or so. (to lower the gain and make it easy to identify the resonance frequency)
- Set up the amplitude to 50 (r/min) or so. (not to saturate the torque)
- Make the offset to 100 (r/min) or so. (to increase the speed detecting data and to avoid the measurement error in the vicinity of speed-zero)
- Polarity is made CCW with "+" and CW with "-".
- Setup the sampling rate to 0. (setup range to be 0-7.)

(3) Execute the frequency characteristic analysis.

<Remarks>

- Make sure that the revolution does not exceed the travel limit before the measurement.
  Standard revolutions are,
  Offset (r/min) x 0.017 x (sampling rate + 1)
  Larger the offset, better measurement result you can obtain, however, revolutions may be increased.
- Set up Pr23 (Setup of adaptive filter mode) to 0 while you make measurement.

<Notes>

- When you set a larger value of offset than the amplitude setup and make the motor run to the one direction at all time, you can obtain a better measurement result.
- Set up a smaller sampling rate when you measure a high frequency band, and a larger sampling rate when you measure a low frequency band in order to obtain a better measurement result.
- When you set a larger amplitude, you can obtain a better measurement result, but noise will be larger. Start a measurement from 50 [r/min] and gradually increase it.

Relation of Gain Adjustment and Machine Stiffness

In order to enhance the machine stiffness,
(1) Install the base of the machine firmly, and assemble them without looseness.
(2) Use a coupling designed exclusively for servo application with high stiffness.
(3) Use a wider timing belt. Belt tension to be within the permissible load to the motor shaft.
(4) Use a gear reducer with small backlash.

- Inherent vibration (resonance frequency) of the machine system has a large effect to the gain adjustment of the servo.
  You cannot setup a higher response of the servo system to the machine with a low resonance frequency (machine stiffness is low).

Manual Gain Tuning (Basic)

Automatic Gain Setup Function

Outline

This function initializes control parameters and gain switching parameters to the gain setups corresponding to the stiffness during auto-gain tuning, before executing a manual tuning.

Caution

When you execute the automatic gain setup function, stop the action first then make a change.

How to Use

Refer to P.72, "Fit-Gain Screen" of Preparation.

(1) Stop the action first.

(2) Start up the automatic gain setup function from the fit-gain screen of the front panel.

(3) 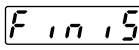 will be displayed when the automatic gain setup completes normally, and 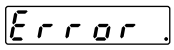 will be displayed when it completes with error.

(This display can be cleared by pressing any key.)

(4) If you want to store the measurement, write it to EEPROM.

Parameters Which Are Automatically Set

Parameters Which Are Automatically Set

Parameter No.	Title of parameter
10	1st gain of position loop
11	1st gain of velocity loop
12	1st time constant of velocity loop integration
13	1st filter of speed detection
14	1st time constant of torque filter time
18	2nd gain of position loop
19	2nd gain of velocity loop
1A	2nd time constant of velocity loop integration
1B	2nd filter of speed detection
1C	2nd time constant of torque filter

Parameters Which Setup Values Are Automatically Fixed

Parameter No.	Title of parameter	Setup value
15	Velocity feed forward	300
16	Time constant of feed forward filter	50
27	Instantaneous speed observer	0
30	2nd gain setup	1
31	1st control switching mode	10*1
32	1st delay time of control switching	30
33	1st level of control switching	50
34	1st Hysteresis of control switching	33
35	Switching time of position gain	20
36	2nd mode of control switching	0

*1 In case of position and full-closed control, this becomes 10, and 0 in case of velocity and torque control.

Instantaneous Speed Observer

Outline

This function enables both realization of high response and reduction of vibration at stopping, by estimating the motor speed using a load model, hence improving the accuracy of the speed detection.

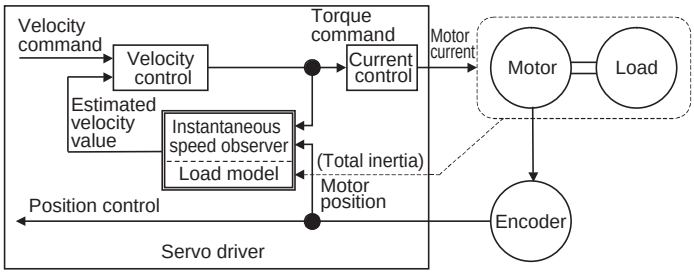

Applicable Range

This function can be applicable only when the following conditions are satisfied.

	Conditions under which the instantaneous speed observer is activated
Control mode	• Control mode to be either or both position control or/and velocity control. Pr02 = 0 : Position control Pr02 = 1 : Velocity control Pr02 = 3 : Position and Velocity control Pr02 = 4 : Position control only Pr02 = 5 : Position control only
Encoder	• 7-wire absolute encoder

Caution

This function does not work properly or no effect is obtained under the following conditions.

	Conditions which obstruct the instantaneous speed observer effect
Load	• Gap between the estimated total load inertia (motor + load) and actual machine is large. e.g.) Large resonance point exists in frequency band of 300[Hz] or below. Non-linear factor such as large backlash exists. • Load inertia varies. • Disturbance torque with harmonic component is applied.
Others	• Settling range is very small.

How to Use

(1) Setup of inertia ratio (Pr20)

Set up as exact inertia ratio as possible.

- When the inertia ratio (Pr20) is already obtained through real-time auto-gain tuning and is applicable at normal position control, use this value as Pr20 setup value.
- When the inertia ratio is already known through calculation, enter this calculated value.
- When the inertia ration is not known, execute the normal mode auto-gain tuning and measure the inertia ratio.

(2) Adjustment at normal position control

Refer to P.241, "Adjustment at Position Control Mode".

(3) Setup of instantaneous velocity observer (Pr27)

- You can switch the velocity detecting method to instantaneous velocity observer by setting up Pr27 (Setup of instantaneous speed observer) to 1.
- When you experience a large variation of the torque waveform or noise, return this to 0, and reconfirm the above cautions and (1).
- When you obtain the effect such as a reduction of the variation of the torque waveform and noise, search an optimum setup by making a fine adjustment of Pr20 (Inertia ratio) while observing the position deviation waveform and actual speed waveform to obtained the least variation. If you change the position loop gain and velocity loop gain, the optimum value of the inertia ratio (Pr20) might have been changed, and you need to make a fine adjustment again.

Manual Gain Tuning (Application)

Damping Control

Outline

This function reduces the vibration by removing the vibration frequency component from the command when the load end of the machine vibrates.

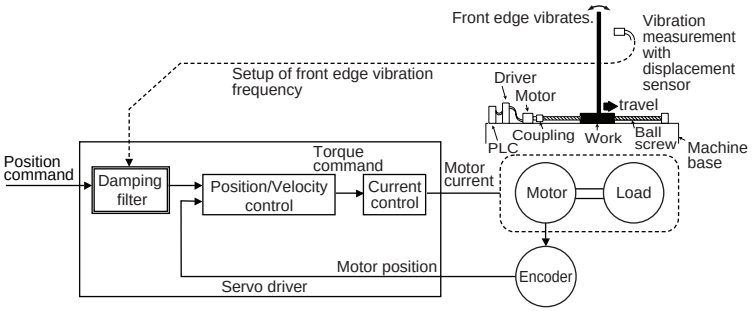

Applicable Range

This function can only be applicable when the following conditions are satisfied.

	Conditions under which the damping control is activated
Control mode	• Control mode to be either or both position control or/and full-closed control. Pr02 = 0 : Position control Pr02 = 3 : 1st control mode of position and velocity control Pr02 = 4 : 1st control mode of position control and torque control Pr02 = 6 : Full-closed control

Caution

When you change the parameter setup or switch with VS-SEL, stop the action first then execute.

This function does not work properly or no effect is obtained under the following conditions.

	Conditions which obstruct the damping control effect
Load	• Vibration is triggered by other factors than command (such as disturbance). • Ratio of resonance frequency and anti-resonance frequency is large. • Vibration frequency is out of the range of 10.0-200.0 [Hz] .

How to Use

(1) Setup of damping frequency (1st : Pr2B, 2nd : Pr2D))

Measure the vibration frequency of the front edge of the machine. When you use such instrument as laser displacement meter, and can directly measure the load end vibration, read out the vibration frequency from the measured waveform and enter it to Pr2B or Pr2D (Damping frequency).

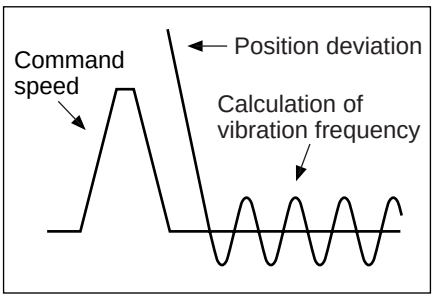

(2) Setup of damping filter (1st : Pr2C, 2nd : Pr2E))

First, set up 0.

You can reduce the settling time by setting up larger value, however, the torque ripple increases at the command changing point as the right fig. shows. Setup within the range where no torque saturation occurs under the actual condition. If torque saturation occurs, damping control effect will be lost.

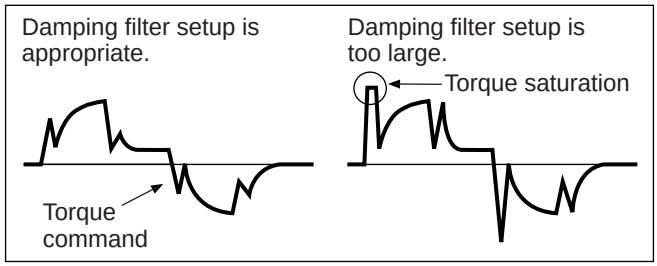

<Remark>

Limit the damping filter setup with the following formula.
10.0 [Hz] – Damping frequency ≦ Damping filter setup ≦ Damping frequency

(3) Setup of damping filter switching selection (Pr24)

You can switch the 1st or the 2nd damping filter depending on the vibration condition of the machine.

Pr24	Switching mode
0	No switching (Both of 2 are valid.)
1	Switch with VS-SEL input. Open : 1st damping filter Close : 2nd damping filter
2	Switch with command direction. CCW : 1st damping filter CW : 2nd damping filter

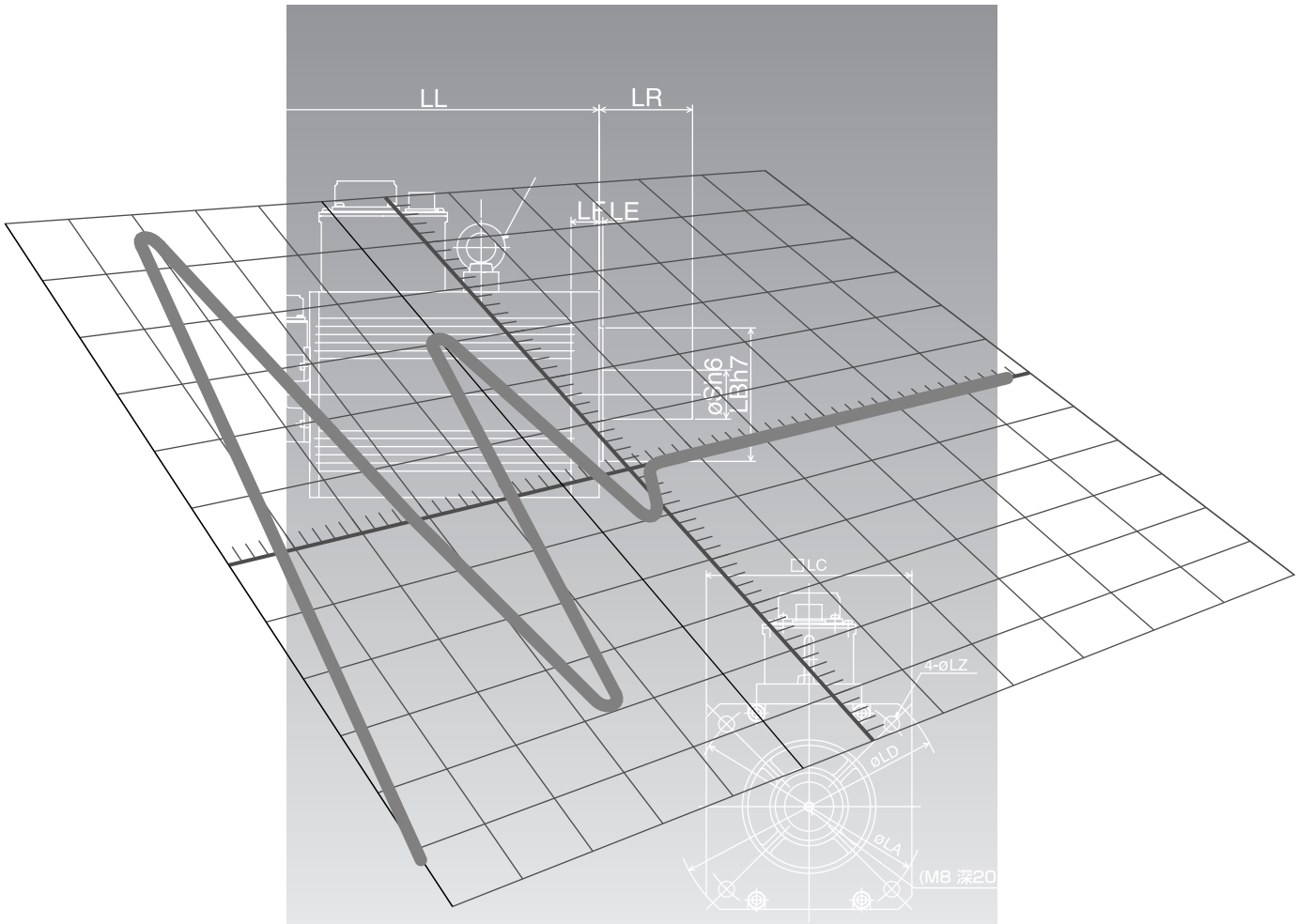

[When in Trouble]

page

When in Trouble 252

What to Check ? 252
Protective Function (What is Error Code ?) 252
Protective Function (Details of Error Code) 253

Troubleshooting 260

Motor Does Not Run 260
Unstable Rotation (Not Smooth)/Motor Runs Slowly Even with Speed Zero at Velocity Control Mode 261
Positioning Accuracy Is Poor 262
Origin Point Slips 263
Abnormal Noise or Vibration 263
Overshoot/Undershoot, Overheating of the Motor (Motor Burn-Out) 264
Motor Speed Does Not Reach to the Setup/Motor Revolution (Travel) Is Too Large or Small 264
Parameter Returns to Previous Setup 264
Display of "Communication port or driver cannot be detected" Appears on the Screen While using the PANATERM® 264

When in Trouble

What to Check ?

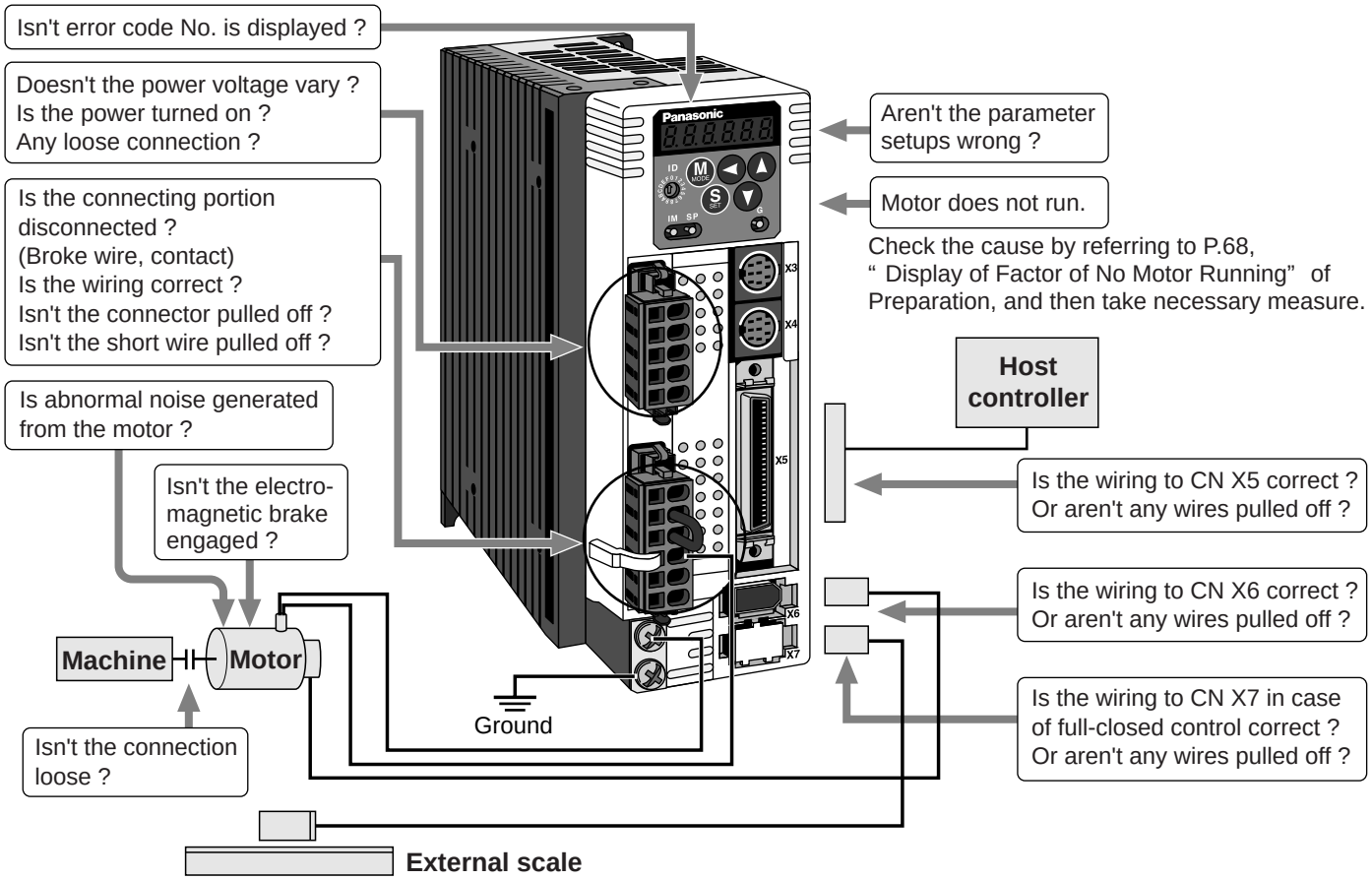

Protective Function (What is Error Code ?)

- Various protective functions are equipped in the driver. When these are triggered, the motor will stall due to error, according to P.43, "Timing Chart (When error occurs)"of Preparation, and the driver will turn the Servo-Alarm output (ALM) to off (open).

- Error status ands their measures
  - During the error status, the error code No. will be displayed on the front panel LED, and you cannot turn Servo-ON.
  - You can clear the error status by turning on the alarm clear input (A-CLR) for 120ms or longer.
  - When overload protection is triggered, you can clear it by turning on the alarm clear signal (A-CLR) 10 sec or longer after the error occurs. You can clear the time characteristics by turning off the connection between L1C and L2C or r and t of the control power supply of the driver.
  - You can clear the above error by operating the front panel keys. (Refer to P.73, "Alarm Clear Mode" of Preparation.)
  - You can also clear the above error by operating the "PANATERM®".

<Remarks>

- When the protective function with a prefix of "*" in the protective function table is triggered, you cannot clear with alarm clear input (A-CLR). For resumption, shut off the power to remove the cause of the error and re-enter the power.
- Following errors will not be stored in the error history.

Control power supply under-voltage protection	(Error code No. 11)
Main power supply under-voltage protection	(Error code No. 13)
EEPROM parameter error protection	(Error code No. 36)
EEPROM check code error protection	(Error code No. 37)
Over-travel prohibition input protection	(Error code No. 38)
Motor self-recognition error protection	(Error code No. 95)

Protective Function (Detail of Error Code)

Protective function	Error code No.	Causes	Measures
Control power supply under-voltage protection	**11**	Voltage between P and N of the converter portion of the control power supply has fallen below the specified value. 1)Power supply voltage is low. Instantaneous power failure has occurred 2)Lack of power capacity...Power supply voltage has fallen down due to inrush current at the main power-on. 3)Failure of servo driver (failure of the circuit)	Measure the voltage between lines of connector (L1C and L2C) and terminal block (r and t). 1)Increase the power capacity. Change the power supply. 2)Increase the power capacity. 3)Replace the driver with a new one.
Over-voltage protection	**12**	Voltage between P and N of the converter portion of the control power supply has exceeded the specified value 1)Power supply voltage has exceeded the permissible input voltage. Voltage surge due to the phase-advancing capacitor or UPS (Uninterruptible Power Supply) have occurred. 2)Disconnection of the regeneration discharge resistor 3)External regeneration discharge resistor is not appropriate and could not absorb the regeneration energy. 4)Failure of servo driver (failure of the circuit)	Measure the voltage between lines of connector (L1, L2 and L3). 1)Enter correct voltage. Remove a phase-advancing capacitor. 2)Measure the resistance of the external resistor connected between terminal P and B of the driver. Replace the external resistor if the value is ∞. 3)Change to the one with specified resistance and wattage. 4)Replace the driver with a new one.
Main power supply under-voltage protection	**13**	Instantaneous power failure has occurred between L1 and L3 for longer period than the preset time with Pr6D (Main power off detecting time) while Pr65 (LV trip selection at the main power-off) is set to 1. Or the voltage between P and N of the converter portion of the main power supply has fallen below the specified value during Servo-ON. 1)Power supply voltage is low. Instantaneous power failure has occurred 2)Instantaneous power failure has occurred. 3)Lack of power capacity...Power supply voltage has fallen down due to inrush current at the main power-on. 4)Phase lack...3-phase input driver has been operated with single phase input. 5)Failure of servo driver (failure of the circuit)	Measure the voltage between lines of connector (L1, L2 and L3). 1)Increase the power capacity. Change the power supply. Remove the causes of the shutdown of the magnetic contactor or the main power supply, then re-enter the power. 2)Set up the longer time to Pr6D (Main power off detecting time). Set up each phase of the power correctly. 3)Increase the power capacity. For the capacity, refer to P.32, "Driver and List of Applicable Peripheral Equipments" of Preparation. 4)Connect each phase of the power supply (L1, L2 and L3) correctly. For single phase, 100V and 200V driver, use L1 and L3. 5)Replace the driver with a new one.
*** Over-current protection**	**14**	Current through the converter portion has exceeded the specified value. 1)Failure of servo driver (failure of the circuit, IGBT or other components) 2)Short of the motor wire (U, V and W) 3)Earth fault of the motor wire 4)Burnout of the motor 5)Poor contact of the motor wire. 6)Melting of the relays for dynamic brake due to frequent Servo-ON/OFF operation 7)The motor is not applicable to the driver. 8)Timing of pulse input is same as or earlier than Servo-ON. 9)Overheating of the dynamic brake circuit (F-frame only)	1)Turn to Servo-ON, while disconnecting the motor. If error occurs immediately, replace with a new driver. 2)Check that the motor wire (U, V and W) is not shorted, and check the branched out wire out of the connector. Make a correct wiring connection. 3)Measure the insulation resistance between motor wires, U, V and W and earth wire. In case of poor insulation, replace the motor. 4)Check the balance of resister between each motor line, and if unbalance is found, replace the motor. 5)Check the loose connectors. If they are, or pulled out, fix them securely. 6)Replace the driver. Prohibit the run/stop operation with Servo-ON/OFF. 7)Check the name plate and capacity of the motor and driver, and replace with motor applicable to the driver. 8)Enter the pulses 100ms or longer after Servo-ON. 9)Discontinue the run/stop operation with Servo ON-OFF. Allow approx. 3 minutes pause when the dynamic brake is activated during high-speed running.
*** Over-heat protection**	**15**	Temperature of the heat sink or power device has been risen over the specified temperature. 1)Ambient temperature has risen over the specified temperature. 2)Over-load	1)Improve the ambient temperature and cooling condition. 2)Increase the capacity of the driver and motor. Set up longer acceleration/deceleration time. Lower the load.

Protective function	Error code No.	Causes	Measures
Over-load protection	**16**	Torque command value has exceeded the over-load level set with Pr72 (Setup of over-load level) and resulted in overload protection according to the time characteristics (described later) 1)Load was heavy and actual torque has exceeded the rated torque and kept running for a long time. 2)Oscillation and hunching action due to poor adjustment. Motor vibration, abnormal noise. Inertia ratio (Pr20) setup error. 3)Miswiring, disconnection of the motor. 4)Machine has collided or the load has gotten heavy. Machine has been distorted. 5)Electromagnetic brake has been kept engaged. 6)While wiring multiple axes, miswiring has occurred by connecting the motor cable to other axis. 7)Pr72 setup has been low.	Check that the torque (current) does not oscillates nor fluctuate up an down very much on the graphic screen of the PANATERM®. Check the over-load alarm display and load factor with the PANATERM®. 1)Increase the capacity of the driver and motor. Set up longer acceleration/deceleration time. Lower the load. 2)Make a re-adjustment. 3)Make a wiring as per the wiring diagram. Replace the cables. Connect the black (W phase), white (V phase) and red (U phase) cables in sequence from the bottom at the CN X2 connector. 4)Remove the cause of distortion. Lower the load. 5)Measure the voltage between brake terminals. Release the brake 6)Make a correct wiring by matching the correct motor and encoder wires. 7)Set up Pr72 to 0. (Set up to max. value of 115% of the driver)
*** Over-regeneration load protection**	**18**	Regenerative energy has exceeded the capacity of regenerative resistor. 1)Due to the regenerative energy during deceleration caused by a large load inertia, converter voltage has risen, and the voltage is risen further due to the lack of capacity of absorbing this energy of the regeneration discharge resistor. 2)Regenerative energy has not been absorbed in the specified time due to a high motor rotational speed. 3)Active limit of the external regenerative resistor has been limited to 10% duty. **<Remarks>** Install an external protection such as thermal fuse without fail when you set up Pr6C to 2. Otherwise, regenerative resistor loses the protection and it may be heated up extremely and may burn out.	Check the load factor of the regenerative resistor on the monitor screen of the PANATERM®. Do not use in the continuous regenerative brake application. 1)Check the running pattern (velocity monitor). Check the load factor of the regenerative resistor and over-regeneration warning display. Increase the capacity of the driver and the motor, and loosen the deceleration time. Use the external regenerative resistor. 2)Check the running pattern (speed monitor). Check the load factor of the regenerative resistor. Increase the capacity of the driver and the motor, and loosen the deceleration time. Lower the motor rotational speed. Use an external regenerative resistor. 3)Set up Pr6C to 2.
*** Encoder communi-cation error protection**	**21**	Communication between the encoder and the driver has been interrupted in certain times, and disconnection detecting function has been triggered.	• Make a wiring connection of the encoder as per the wiring diagram. Correct the miswiring of the connector pins. Note that the encoder cable to be connected to CN X6. • Secure the power supply for the encoder of DC5V±5% (4.75-5.25V)...pay an attention especially when the encoder cables are long. • Separate the encoder cable and the motor cable if they are bound together. • Connect the shield to FG...Refer to P.38, "Wiring to the Connector, CN X6" of Preparation.
*** Encoder communi-cation data error protection**	**23**	Communication error has occurred in data from the encoder. Mainly data error due to noise. Encoder cables are connected, but communication data has some errors.	
Position deviation excess protection	**24**	Deviation pulses have exceeded the setup of Pr70 (Setup of position deviation excess). 1)The motor movement has not followed the command. 2)Setup value of Pr70 (Setup of position deviation excess) is small.	1)Check that the motor follows to the position command pulses. Check that the output toque has not saturated in torque monitor. Make a gain adjustment. Set up maximum value to Pr5E (Setup of 1st torque limit) and Pr5F (2nd torque limit setup). Make a encoder wiring as per the wiring diagram. Set up the longer acceleration/deceleration time. Lower the load and speed. 2)Set up a larger value to Pr70, or set up 0 (invalid).

Protective function	Error code No.	Causes	Measures
*** Hybrid deviation excess error protection**	**25**	Position of load by the external scale and position of the motor by the encoder slips larger than the setup pulses with Pr7B (Setup of hybrid deviation excess) at full-closed control.	• Check the connection between the motor and the load. • Check the connection between the external scale and the driver. • Check that the variation of the motor position (encoder feedback value) and the load position (external scale feedback value) is the same sign when you move the load. Check that the numerator and denominator of the external scale division (Pr78, 79 and 7A) and reversal of external scale direction (Pr7C) are correctly set.
Over-speed protection	**26**	The motor rotational speed has exceeded the setup value of Pr73 (Over-speed level setup)	• Do not give an excessive speed command. • Check the command pulse input frequency and division/multiplication ratio. • Make a gain adjustment when an overshoot has occurred due to a poor gain adjustment. • Make a wiring connection of the encoder as per the wiring diagram. • Set up Pr73 to 0 (Set up to motor max. speed x 1.2.)
Electronic gear error protection	**27**	Division and multiplication ratio which are set up with the 1st and the 2nd numerator/denominator of the electronic gear (Pr48 to 4B) are not appropriate.	• Check the setup values of Pr48 to 4B. • Set up the division/multiplication ratio so that the command pulse frequency after division. multiplication may become less than 80Mpps at deviation counter input portion, and 3Mpps at command input portion.
*** External scale communication data error protection**	**28**	Communication error has occurred in data from the encoder. Mainly data error due to noise. Encoder cables are connected, but communication date has some error.	• Secure the power supply for the encoder of DC5±5% (4.75-5.25V)...pay attention especially when the encoder cables are long. • Separate the encoder cable and the motor cable if they are bound together. • Connect the shield to FG...refer to wiring diagram.
Deviation counter overflow protection	**29**	Deviation counter value has exceeded 2^{27} (134217728).	• Check that the motor runs as per the position command pulses. • Check that the output toque has not saturated in torque monitor. • Make a gain adjustment. • Set up maximum value to Pr5E (1st torque limit setup) and Pr5F (2nd torque limit setup). • Make a wiring connection of the encoder as per the wiring diagram.
Software limit protection	**34**	The motor position has exceeded the range set with software limit. 1)Gain has not matched up. 2)Setup value of Pr26 (Software limit setup) is small.	Refer to P.258,"Software Limit Function" before using this. 1)Check the gain (balance of position loop gain and velocity loop gain) and the inertia ratio. 2)Setup a larger value to Pr26.
*** External scale communication error protection**	**35**	Communication between the external scale and the driver has been interrupted in certain times, and disconnection detecting function has been triggered.	• Make a wiring connection of the external scale as per the wiring diagram. • Correct the miswiring of the connector pins.
*** EEPROM parameter error protection**	**36**	Data in parameter storage area has been damaged when reading the data from EEPROM at power-on.	• Set up all parameters again. • If the error persists, replace the driver (it may be a failure.) Return the product to the dealer or manufacturer.
*** EEPROM check code error protection**	**37**	Data for writing confirmation to EEPROM has been damaged when reading the data from EEPROM at power-on.	Replace the driver. (it may be a failure). Return the product to a dealer or manufacturer.
Over-travel inhibit input protection	**38**	Connection of both CW and CCW over-travel inhibit input (CWL, Pin-8/CCW, Pin-9) to COM- have been opened, while Pr04 (Over-travel inhibit input setup) is 0. Or either one of the connection of CW or CCW over-travel inhibit input to COM- has been opened, while Pr04 is set to 2.	• Check that there are not any errors in switches, wires or power supply which are connected to CW/CCW over-travel inhibit input. Check that the rising time of the control power supply (DC12-24V) is not slow.

Protective function	Error code No.	Causes	Measures
Analog input excess protection	**39**	Higher voltage has been applied to the analog command input (SPR : CN X5, Pin-14) than the value that has been set by Pr71 (Analog input excess setup) This protective function is validated when SPR/TRQR/SPL is valid such cases as, 1)Velocity control when Pr02 (Control mode setup) is set to 1, 3 or 5 and Pr05 (Velocity setup internal/external switching) is set to 0 or 2, and when analog velocity command is selected and speed zero clamp is invalidated. (velocity command is not zero). 2)Torque control when Pr02 (Control mode setup) is set to 2 or 4 and Pr5B (Torque command selection) is set to 0. 3)Torque control when Pr02 (Control mode setup) is set to 2, 4 or 5 and Pr5B (Torque command selection) is set to 1, and speed zero clamp is invalidated (Velocity command is not zero.)	• Set up Pr71 (Setup of analog input excess) correctly. Check the connecting condition of the connector, CN X5. • Set up a larger value to Pr57 (Filter setup of Velocity command). • Set up Pr71 to 0 and invalidate the protective function.
Absolute system down error protection	**40**	Voltage of the built-in capacitor has fallen below the specified value because the power supply or battery for the 17-bit absolute encoder has been down.	After connecting the power supply for the battery, clear the absolute encoder. (Refer to P.271, "Setup (Initialization) of Absolute Encoder" of Supplement.) You cannot clear the alarm unless you clear the absolute encoder.
*** Absolute counter over error protection**	**41**	Multi-turn counter of the 17-bit absolute encoder has exceeded the specified value.	• Set up an appropriate value to Pr0B (Absolute encoder setup) . • Limit the travel from the machine origin within 32767 revolutions.
Absolute over-speed error protection	**42**	The motor speed has exceeded the specified value when only the supply from the battery has been supplied to 17-bit encoder during the power failure.	• Check the supply voltage at the encoder side (5V±5%) • Check the connecting condition of the connector, CN X6. • You cannot clear the alarm unless you clear the absolute encoder.
*** Absolute single turn counter error protection**	**44**	Single turn counter error of 17-bit absolute encoder has been detected. Single turn counter error of 2500[P/r] , 5-wire serial encoder has been detected.	Replace the motor.
*** Absolute multi-turn counter error protection**	**45**	Multi turn counter error of 17-bit absolute encoder has been detected. Multi turn counter error of 2500[P/r] , 5-wire serial encoder has been detected.	Replace the motor.
Absolute status error protection	**47**	17-bit absolute encoder has been running at faster speed than the specified value at power-on.	Arrange so as the motor does not run at power-on.
*** Encoder Z-phase error protection**	**48**	Missing pulse of Z-phase of 2500[P/r] , 5-wire serial encoder has been detected	The encoder might be a failure. Replace the motor.
*** Encoder CS signal error protection**	**49**	CS signal logic error of 2500[P/r] , 5-wire serial encoder has been detected	The encoder might be a failure. Replace the motor.

Protective function	Error code No.	Causes	Measures
*** External scale status 0 error protection**	**50**	Bit 0 of the external scale error code (ALMC) has been turned to 1. Check the specifications of the external scale.	Remove the causes of the error, then clear the external scale error from the front panel. And then, shut off the power to reset.
*** External scale status 1 error protection**	**51**	Bit 1 of the external scale error code (ALMC) has been turned to 1. Check the specifications of the external scale.	
*** External scale status 2 error protection**	**52**	Bit 2 of the external scale error code (ALMC) has been turned to 1. Check the specifications of the external scale.	
*** External scale status 3 error protection**	**53**	Bit 3 of the external scale error code (ALMC) has been turned to 1. Check the specifications of the external scale.	
*** External scale status 4 error protection**	**54**	Bit 4 of the external scale error code (ALMC) has been turned to 1. Check the specifications of the external scale.	
*** External scale status 5 error protection**	**55**	Bit 5 of the external scale error code (ALMC) has been turned to 1. Check the specifications of the external scale.	
CCWTL input excess protection	**65**	Higher voltage than ±10V has been applied to the analog command input (CCWTL : CN X5, Pin-16) This protective function is validated when CCWTL is valid such cases as, 1) Torque control when Pr02 (Control mode setup) is 5, or Pr02 is2 or 4 and when Pr5B (Torque command selection) is 1. 2) Position control, Velocity control and Full-closed control when Pr03 (Torque limit selection) is 0.	• Check the connecting condition of connector, CN X5. • Set the CCWTL voltage within ±10V.
CWTL input excess protection	**66**	Higher voltage than ±10V has been applied to the analog command input (CCWTL : CN X5, Pin-18) This protective function is validated when CCWTL is valid such case as, 1) Position control, Velocity control and Full-closed control when Pr03 (Torque limit selection) is 0.	• Check the connecting condition of connector, CN X5. • Set the CWTL voltage within ±10V.
*** Motor automatic recognition error protection**	**95**	The motor and the driver has not been matched.	Replace the motor which matches to the driver.
*** Other error**	**Other No.**	Control circuit has malfunctioned due to excess noise or other causes. Some error has occurred inside of the driver while triggering self-diagnosis function of the driver.	• Turn off the power once, then re-enter. • If error repeats, this might be a failure. Stop using the products, and replace the motor and the driver. Return the products to the dealer or manufacturer.

• Time characteristics of Err16 (Overload protection)

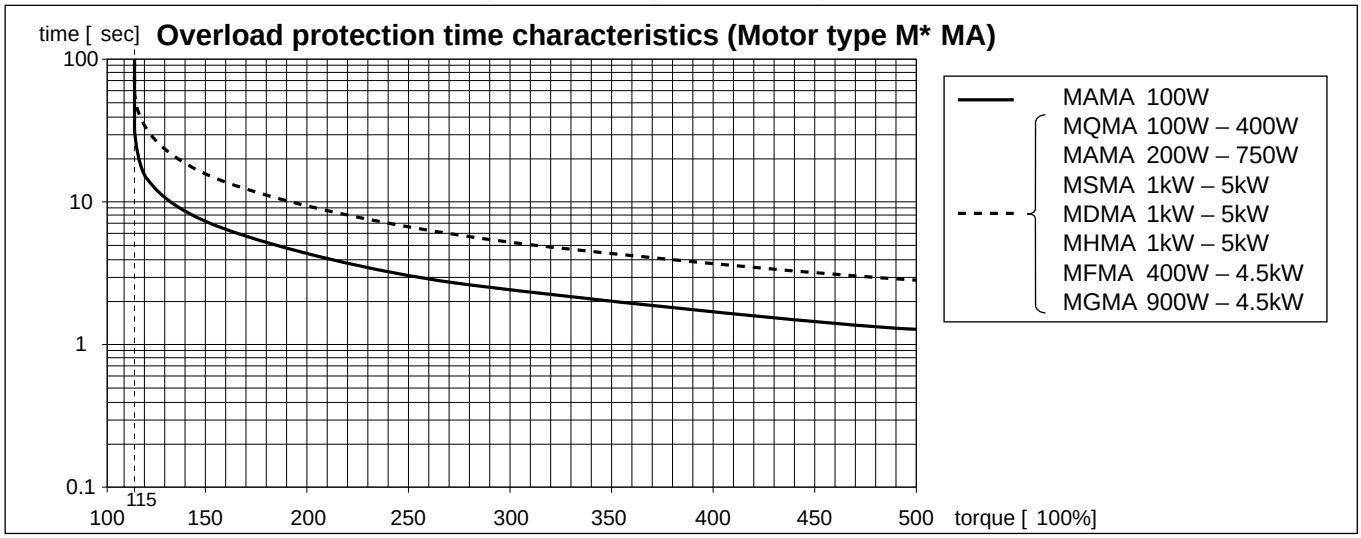

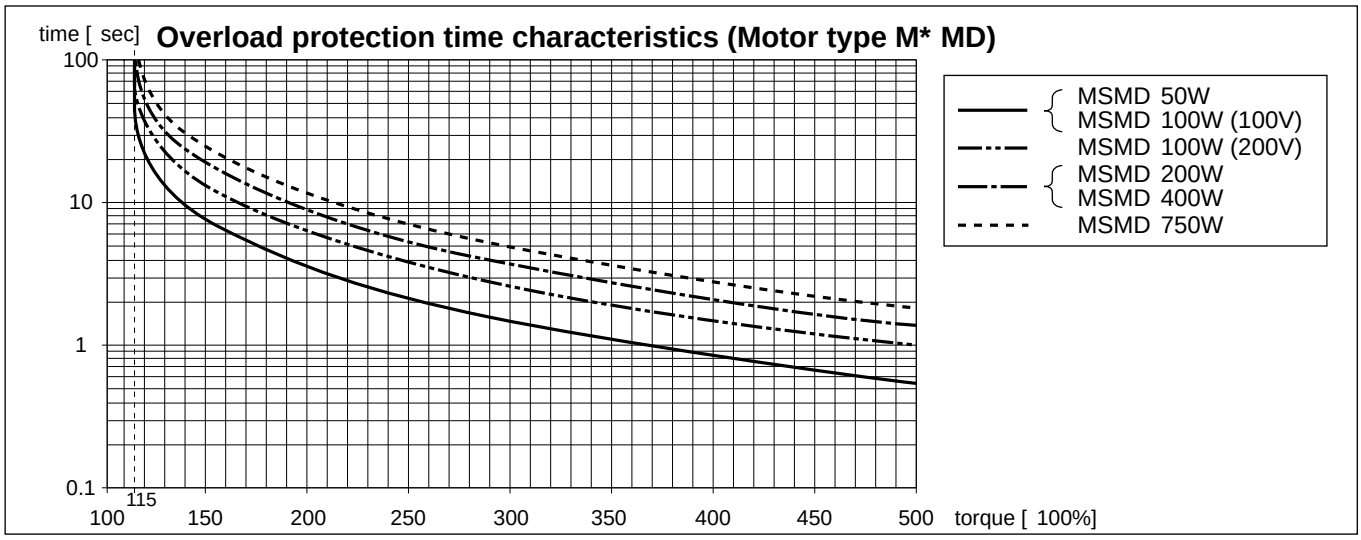

• Software Limit Function

1) Outline

You can make an alarm stop of the motor with software limit protection (Error code No.34) when the motor travels exceeding the movable range which is set up with Pr26 (Set up of software limit) against the position command input range.

You can prevent the work from colliding to the machine end caused by motor oscillation.

2) Applicable range

This function works under the following conditions.

	Conditions under which the software limit works
Control mode	• Either at position control mode or full-closed control mode Pr02 = 0 : Position control Pr02 = 3 : 1st control mode of Position control/Velocity control Pr02 = 4 : 1st control mode of Position control/torque control Pr02 = 6 : Full-closed control
Others	(1) at Servo-ON (2) when Pr26 (Software limit setup) is other than 0. (3) After the last clearance of the position command input range (0 clearance), the movable range of the motor is within 2147483647 for both CCW and CW direction. Once the motor gets out of the (3) condition, the software limit protection will be invalidated until the later mentioned "5) Condition under which the position command input range is cleared" is satisfied. The position command input range will be 0-cleared when the motor gets out of the conditions of (1) and (2).

3) Cautions

- This function is not a protection against the abnormal position command.
- When this software limit protection is activated, the motor decelerates and stops according to Pr68 (Sequence at alarm).
  The work (load) may collide to the machine end and be damaged depending on the load during this deceleration, hence set up the range of Pr26 including the deceleration movement.
- This software limit protection will be invalidated during the trial run and frequency characteristics functioning of the PANATERM®.

4) Example of movement

(1) When no position command is entered (Servo-ON status),

The motor movable range will be the travel range which is set at both sides of the motor with Pr26 since no position command is entered. When the load enters to the Err34 occurrence range (oblique line range), software limit protection will be activated.

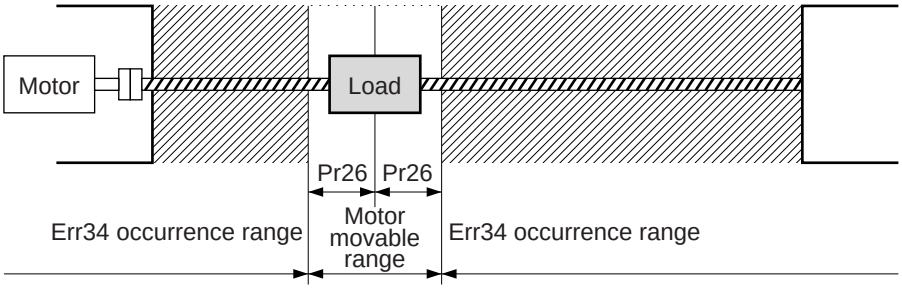

(2) When the load moves to the right (at Servo-ON),

When the position command to the right direction is entered, the motor movable range will be expanded by entered position command, and the movable range will be the position command input range + Pr26 setups in both sides.

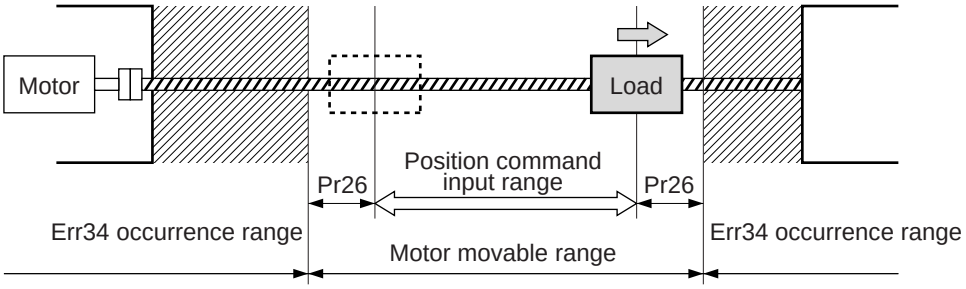

(3) When the load moves to the left (at Servo-ON),

When the position command to the left direction, the motor movable range will be expanded further.

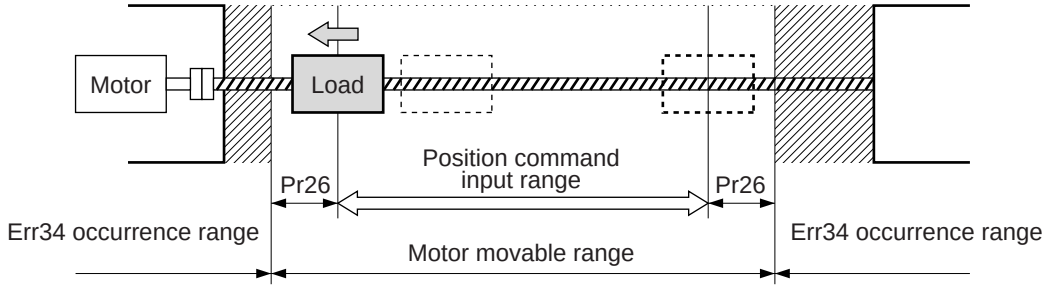

5) Condition under which the position command input range is cleared

The position command input range will be 0-cleared under the following conditions.

- when the power is turned on.
- while the position deviation is being cleared (Deviation counter clear is valid, Pr66 (Sequence at over-travel inhibition) is 2 and over-travel inhibition input is valid.)
- At the starting and the finishing of the normal auto-gain tuning.

Troubleshooting

Motor Does Not Run

When the motor does not run, refer to P.68, "Display of Factor of No-Motor Running" of Preparation as well.

Classification	Causes		Measures
Parameter	Setup of the control mode is not correct	Check that the present control mode is correct with monitor mode of the front panel.	1)Set up Pr02 (Setup of control mode) again. 2)Check that the input to control mode switching (C-MODE) of the CN X5 is correct, when Pr03 is set to 3-5.
	Selection of torque limit is not correct	Check that the external analog input (CWTL/CCWTL) is not used for the torque limit.	1)Set up Pr03 (Selection of torque limit) to 0 and apply -9 [V] to CWTL and +9 [V] to CCWTL when you use the external input. 2)Set up Pr03 (Selection of torque limit) to 1 and set up the max. value to Pr5E (Setup of 1st torque limit) when you use the parameter value.
	Setup of electronic gear is not correct. (Position/Full-closed)	Check that the motor moves by expected revolution against the command pulses.	1)Check the setups of Pr48-4B again. 2)Connect the electronic gear switching input (DIV) of CN X5 to COM–, or invalidate the division/multiplication switching by setting up the same value to Pr48 and Pr49.
Wiring	Servo-ON input of CN X5 (SRV-ON) is open.	Check that the input signal No.0 or No.03 does not show "-", with monitor mode of the front panel.	Check and make a wiring so as to connect the SRV-ON input to COM–.
	CW/CCW over-travel inhibit input of CN X5 (CWTL/CCWTL) is open.	Check that the input signal No.02 or No.03 does not show "A", with monitor mode of the front panel.	1)Check and make a wiring so as to connect both CWL and CCWL inputs to COM–. 2)Set up Pr04 (Setup of over-travel inhibit input) to 1 (invalid) and reset the power.
	Command pulse input setup is incorrect. (Position/Full-closed)	Check that the input pulse counts and variation of command pulse sum does not slips, with monitor mode of the front panel.	1)Check that the command pulses are entered correctly to the direction selected with Pr40 (Selection of command pulse input). 2)Check that the command pulses are entered correctly in the format selected with Pr42 (Setup of command pulse input mode).
	Command pulse input inhibition (INH) of CN X5 is open. (Position/Full-closed)	Check that the input signal No.08 does not show "A", with monitor mode of the front panel.	1)Check and make a wiring so as to connect the INH input to COM-. 2)Set up Pr43 (Invalidation of command pulse inhibition input) to 1 (invalid).
	Counter clear input (CL) of CN X5 is connected to COM–. (Position/Full-closed)	Check that the input signal No.0A does not show "A" , with monitor mode of the front panel.	1)Check and make wiring so as to open the CL input 2)Set up Pr4E (Counter clear input mode) to 2 (invalid).
	Speed command is invalid (Velocity)	Check that the velocity command input method (external analog command/internal velocity command) is correct.	1)Check the setups of Pr50-52 again by setting up Pr05 (Internal or external switching of speed setup) to 0, when you use the external analog command. 2)Set up Pr53-56 and Pr74-77 by setting up Pr05 (Internal or external switching of speed setup) to either one of 1, 2 or 3, when you use the internal speed command.
	Speed zero clamp input (ZEROSPD) of CN X5 is open. (Velocity/Torque)	Check that the input signal No.05 does not show "A" , with monitor mode of the front panel.	1)Check and make wiring so as to connect speed zero clamp input to COM–. 2)Set up Pr06 (Selection of ZEROSPD input) to 0 (invalid).
	Torque command is invalid (Torque)	Check that the torque command input method (SPR/TRQR input, CCWTL/TRQR input) is correct.	1)Check that the input voltage is applied correctly by setting up Pr5B (Selection of torque command) to 0, when you use SPR/TRQR input. 2)Check that the input voltage is applied correctly by setting up Pr5B (Selection of torque command) to 1, when you use the CCWTL/CWTL input.
	Velocity control is invalid (Torque)	Check that the velocity limit input method (internal velocity, SPR/TRQR/SPL input) is correct.	1)Set up the desired value to Pr56 (Speed setup/4th speed) by setting up Pr5B (Selection of torque command) to 0, when you use the internal speed. 2)Check that the input voltage is applied correctly by setting up Pr5B Selection of torque command) to 1, when you use the SPR/TRQR/SPL input.
Installation	Main power is shut off.	Check that the output signal No.0 does not show "-", with monitor mode of the front panel.	Check the wiring/voltage of main power of the driver (L1, L2 and L3).
	The motor shaft drags, the motor does not run.	1)Check that you can turn the motor shaft, after turning off the power and separate it from the machine. 2)Check that you can turn the motor shaft while applying DC24V to the brake in case of the motor with electromagnetic brake.	If you cannot turn the motor shaft, consult with the dealer for repair.

Unstable Rotation (Not Smooth)

Motor Runs Slowly Even with Speed Zero at Velocity Control Mode

Classification	Causes	Measures
Parameter	Setup of the control mode is not correct.	If you set up Pr02 to 1(Velocity control mode) by mistake at position control mode, the motor runs slowly at servo-ON due to speed command offset. Change the setup of Pr02 to 0.
Adjustment	Gain adjustment is not proper.	Increase the setup of Pr11, 1st velocity loop gain. Enter torque filter of Pr14 and increase the setup of Pr11 again.
	Velocity and position command are not stable.	Check the motor movement with check pin of the front panel or the waveform graphic function of the PANATERM®. Review the wiring, connector contact failure and controller.
Wiring	Each input signal of CN X5 is chattering. 1) Servo-ON signal	1)Check the wiring and connection between Pin29 and 41 of the connector, CN X5 using the display function of I/O signal status. Correct the wiring and connection so that the Servo-ON signal can be turned on normally. Review the controller.
	2) CW/CCW torque limit input signal	2)Check the wiring and connection between Pin-18 and 17, 16 and 17 of the connector, CN X5 using tester or oscilloscope. Correct the wiring and connection so that CW/CCW torque limit input can be entered normally.
	3) Deviation counter input signal	3)Check the wiring and connection between Pin-30 and 41, 16 and 17 of the connector, CN X5 using display function of I/O signal status. Correct the wiring and connection so that the deviation counter input can be turned on normally. Review the controller.
	4) Speed zero clamp signal	4)Check the wiring and connection between Pin-26 and 41of the connector, CN X5 using Display function of I/O signal status. Correct the wiring and connection so that the speed zero clamp input can be entered normally. Review the controller.
	5) Command pulse inhibition input	5)Check the wiring and connection between Pin-33 and 41of the connector, CN X5 using display function of I/O signal status. Correct the wiring and connection so that the command pulse inhibition input can be entered normally. Review the controller.
	Noise is on the velocity command.	Use a shield cable for connecting cable to the connector, CN X5. Separate the power line and signal line (30cm or longer) in the separate duct.
	Slip of offset	Check the voltage between Pin-14 and 15 (speed command input) using a tester or an oscilloscope. Adjust the Pr52 value so that the motor stops.

Troubleshooting

Positioning Accuracy Is Poor

Classification	Causes	Measures
System	Position command is not correct.	Count the feedback pulses with a monitor function of the PANATERM® or feedback pulse monitor mode of the console while repeating the movement of the same distance. If the value does not return to the same value, review the controller. Make a noise measure to command pulse.
	Captures the positioning complete signal at the edge.	Monitor the deviation at positioning complete signal reception with a check pin (IM) or the waveform graphic function of the PANATERM®. Make the controller capture the signal not at the edge but with some time allowance.
	Shape or width of the command pulse is not per the specifications.	If the shape of the command pulse is broken or narrowed, review the pulse generating circuit. Make a noise measure.
	Noise is superposed on deviation counter clear input CL (CN X5, Pin-5).	Make a noise measure to external DC power supply and make no wiring of the unused signal lines.
Adjustment	Position loop gain is small.	Check the position deviation with the monitor function of the PANATERM® or at the monitor mode of the console. Increase the setup of Pr10 within the range where no oscillation occurs.
Parameter	Setup of the positioning complete range is large.	Lower the setup of Pr60 within the range where no chattering of complete signal occurs.
	Command pulse frequency have exceeded 500kpps or 2Mpps.	Lower the command pulse frequency. Change the division/multiplication ratio of 1st and 2nd numerator of command division/multiplication, Pr48 and Pr4B. Use a pulse line interface exclusive to line driver when pulse line interface is used.
	Setup of the division/multiplication is not correct.	Check if the repetition accuracy is same or not. If it does not change, use a larger capacity motor and driver.
	Velocity loop gain is proportion action at motor in stall.	• Set up Pr12 and Pr1A of time constant of velocity loop integration to 999 or smaller. • Review the wiring and connection so that the connection between Pin-27 and 41 of the gain switching input connector, CN X5 becomes off while you set up Pr30 of 2nd gain setup, to 1.
Wiring	Each input signal of CN X5 is chattering. 1) Servo-ON signal	 1)Check the wiring and connection between Pin29 and 41 of the connector, CN X5 using the display function of I/O signal status. Correct the wiring and connection so that the servo-On signal can be turned on normally. Review the controller.
	2) Deviation counter clear input signal	2)Check the wiring and connection between Pin-30 and 41, 16 and 17 of the connector, CN X5 using display function of I/O signal status. Correct the wiring and connection so that the deviation counter clear input can be turned on normally. Review the controller.
	3) CW/CCW torque limit input signal	3 Check the wiring and connection between Pin-18 and 17, 16 and 17 of the connector, CN X5 using tester or oscilloscope. Correct the wiring and connection so that CW/CCW torque limit input can be entered normally.
	4) Command pulse inhibition input	4)Check the wiring and connection between Pin-33 and 41of the connector, CN X5 using display function of I/O signal status. Correct the wiring and connection so that the command pulse inhibition input can be entered normally. Review the controller.
Installation	Load inertia is large.	Check the overshoot at stopping with graphic function of the PANATERM®. If no improvement is obtained, increase the driver and motor capacity.

Origin Point Slips

Classification	Causes	Measures
System	Z-phase is not detected.	Check that the Z-phase matches to the center of proximity dog. Execute the homing matching to the controller correctly.
	Homing creep speed is fast	Lower the homing speed at origin proximity. Or widen the origin sensor.
Wiring	Chattering of proximity sensor (proximity dog sensor) output	Check the dog sensor input signal of the controller with oscilloscope. Review the wiring near to proximity dog and make a noise measure or reduce noise.
	Noise is on the encoder line.	Reduce noise (installation of noise filter or ferrite core), shield treatment of I/F cables, use of a twisted pair or separation of power and signal lines.
	No Z-phase signal output	Check the Z-phase signal with oscilloscope. Check that the Pin-13 of the connector, CN X5 is connected to the earth of the controller. Connect the earth of the controller because the open collector interface is not insulated. Replace the motor and driver. Request for repair.
	Miswiring of Z-phase output	Check the wiring to see only one side of the line driver is connected or not. Use a CZ output (open collector if the controller is not differential input.

Abnormal Motor Noise or Vibration

Classification	Causes	Measures
Wiring	Noise is on the speed command.	Measure the speed command inputs of Pin-14 and 15 of the connector, CN X5 with an oscilloscope. Reduce noise (installation of noise filter or ferrite core), shield treatment of I/F cables, use of a twisted pair, separation of power and signal lines.
Adjustment	Gain setup is large.	Lower the gain by setting up lower values to Pr11 and 19, of velocity loop gain and Pr10 and 18 of position loop gain.
Installation	Velocity detection filter is changed.	Enlarge the setup of Pr13 and 1B, velocity detection filter within the range where noise level is acceptable, or return to default value.
	Resonance of the machine and the motor.	Re-adjust Pr14 and 1C (Torque filter). Check if the machine resonance exists or not with frequency characteristics analyzing function of the PANATERM®. Set up the notch frequency to Pr1D or Pr28 if resonance exists.
	Motor bearing	Check the noise and vibration near the bearing of the motor while running the motor with no load. Replace the motor to check. Request for repair.
	Electro-magnetic sound, gear noise, rubbing noise at brake engagement, hub noise or rubbing noise of encoder	Check the noise of the motor while running the motor with no load. Replace the motor to check. Request for repair.

Troubleshooting

Overshoot/Undershoot Overheating of the Motor (Motor Burn-Out)

Classification	Causes	Measures
Adjustment	Gain adjustment is not proper.	Check with graphic function of PANATERM® or velocity monitor (SP) or torque monitor (IM). Make a correct gain adjustment. Refer to P.226 of Adjustment.
Installation	Load inertia is large.	Check with graphic function of PANATERM® or velocity monitor (SP) or torque monitor (IM). Make an appropriate adjustment. Increase the motor and driver capacity and lower the inertia ratio. Use a gear reducer.
	Looseness or slip of the machine	Review the mounting to the machine.
	Ambient temperature, environment	Lower the temperature with cooling fan if the ambient temperature exceeds the predications.
	Stall of cooling fan, dirt of fan ventilation duct	Check the cooling fans of the driver and the machine. Replace the driver fan or request for repair.
	Mismatching of the driver and the motor	Check the name plates of the driver and the motor. Select a correct combination of them referring to the instruction manual or catalogue.
	Failure of motor bearing	Check that the motor does not generate rumbling noise while turning it by hand after shutting off the power. Replace the motor and request for repair if the noise is heard.
	Electromagnetic brake is kept engaged (left un-released).	Check the voltage at brake terminals. Apply the power (DC24V) to release the brake.
	Motor failure (oil, water or others)	Avoid the installation place where the motor is subject to high temperature, humidity, oil, dust or iron particles.
	Motor has been turned by external force while dynamic brake has been engaged.	Check the running pattern, working condition and operating status, and inhibit the operation under the condition of the left.

Motor Speed Does Not Reach to the Setup

Motor Revolutions (Travel) Is Too Large or Small

Classification	Causes	Measures
Parameter	Velocity command input gain is not correct.	Check that the setup of Pr50, speed command input gain, is made so as to make the setup of 500 makes 3000 r/min.
Adjustment	Position loop gain is low.	Set up Pr10, position loop gain to approx. 100.
	Division/Multiplication is not proper.	Set up correct values to Pr48, 1st numerator of electronic gear, 4A, numerator multiplier of electronic gear and 4B, denominator of electronic gear. Refer to parameter setup at each mode.

Parameter Returns to Previous Setup

Classification	Causes	Measures
Parameter	No writing to EEPROM has been carried out before turning off the power.	Refer to P.70, "How to Operate-EEPROM Writing" of Preparation.

Display of "Communication port or driver cannot be detected" Appears on the Screen While Using the PANATERM®.

Classification	Causes	Measures
Wiring	Communication cable (for RS232C) is connected to the connector, CN X3.	Connect the communication cable (for RS232C) to connector, CN X4.

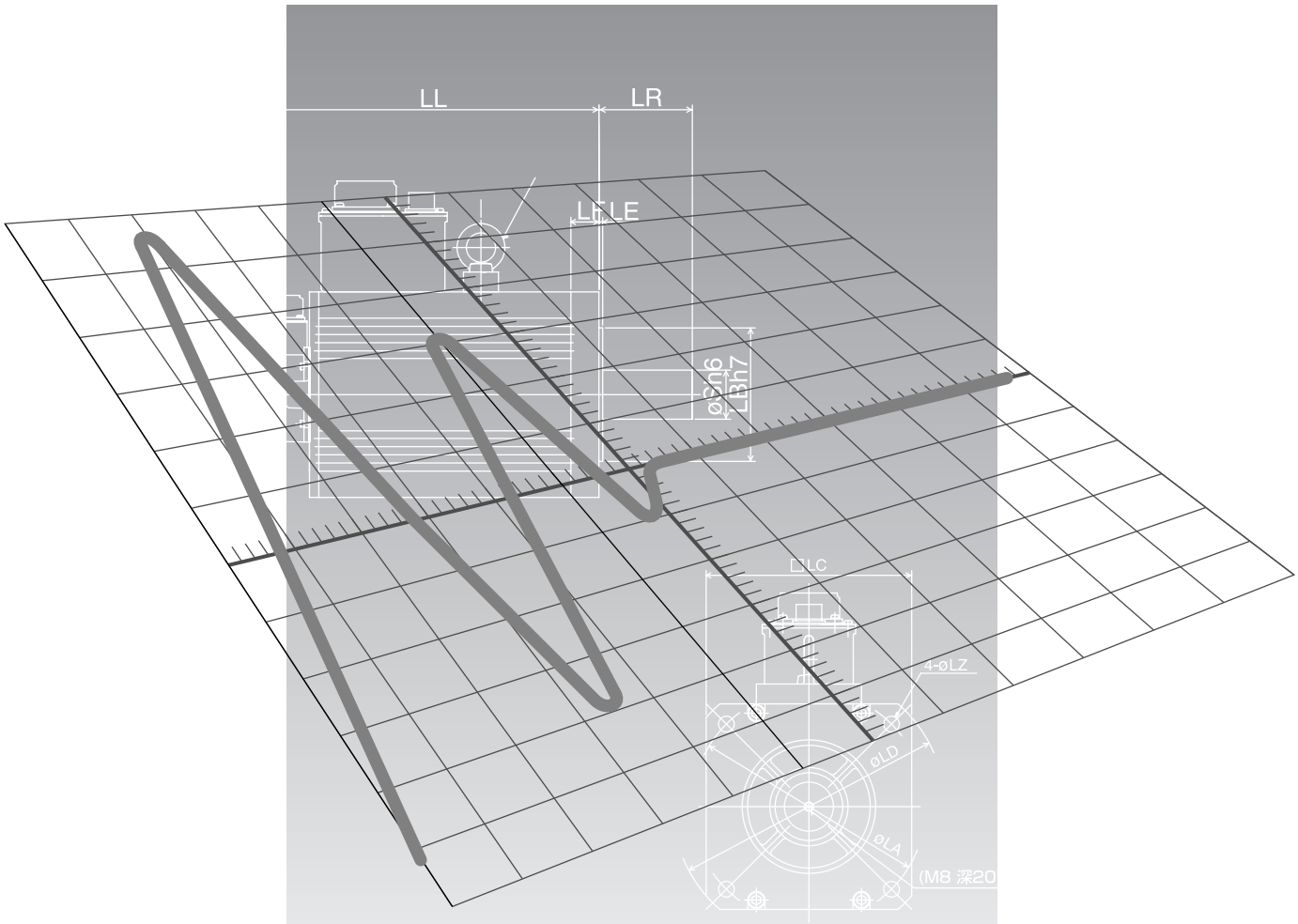

[Supplement]

page

Absolute System 266
Outline of the Setup Support Software, PANATERM® 276
Communication 278
Division Ratio for Parameters 306
Conformity to EC Directives and UL Standards 308
Options 312
Recommended components 323
Dimensions (Driver) 324
Dimensions (Motor) 327
Permissible Load at Output Shaft 342
Motor Characteristics (S-T Characteristics) 343
Motor with Gear Reducer 349
Dimensions (Motor with Gear Reducer) 350
Permissible Load at Output Shaft (Motor with Gear Reducer) 352
Motor Characteristics (S-T Characteristics)/Motor with Gear Reducer 353
Block Diagram of Driver 354
Block Diagram of Driver by Control Mode 356
Specifications (Driver) 358
Homing with "Hit & Stop" and "Press & Hold" Control ... 360

Absolute System

Outline of Absolute System

When you compose an absolute system using an absolute encoder, you are not required to carry out homing operation at the power-on, and this function suits very well to such an application as a robot.

Connect the host controller with the Minas A4 with absolute specifications. (motor with absolute encoder and driver with absolute spec) and set up the parameter, Pr0B to 0, then connect the battery for absolute encoder to compose an absolute system with which you can capture the exact present position information after the power-ON.

Shift the system to origin once after installing the battery and clear the multi-turn data by clearing the absolute encoder, then you can detect the absolute position without carrying out homing operation.
Via RS232 or RS485 communication, the host controller can connect up to 16 MINAS-A4 and capture the present position information as serial data to obtain the absolute position of each axis by processing. each data.

Applicable Mode

You can use all of MINAS A4 series driver in absolute specifications by setting up parameter. Use the motor which 8th place (designated for rotary encoder specifications) is “ S” (7-wire type).

M ∗ M ∗ ∗ ∗ ∗ S ∗ ∗ ∗ ∗

8th place — Rotary encoder specifications

Absolute Specifications

There are 3 connecting methods of the host controller and MINAS-A4 driver as described below, and select a method depending on the interface of the host controller specs or number of axis to be connected. Designate a module ID to RSW of each MINAS-A4 driver when you connect multiple MINAS-A4 in communication to one host controller as shown below.

Module ID (RSW)

- When you connect each MINAS-A4 to the host separately with RS232 and switch the communication individually, designate 0 to F to each MINAS-A4. (Max. 16 axis are connectable.)
- When you connect one MINAS-A4 to the host with RS232 and connect each MINAS-A4 with RS485, designate 0 to the MINAS-A4 connected with the host, and designate 1 to F to other MINAS-A4.
- When you connect MINAS-A4 to the host with RS485, the host is given module ID of 0, and designate 1 to F to MINAS-A4. (Max 15 axis are connectable.)

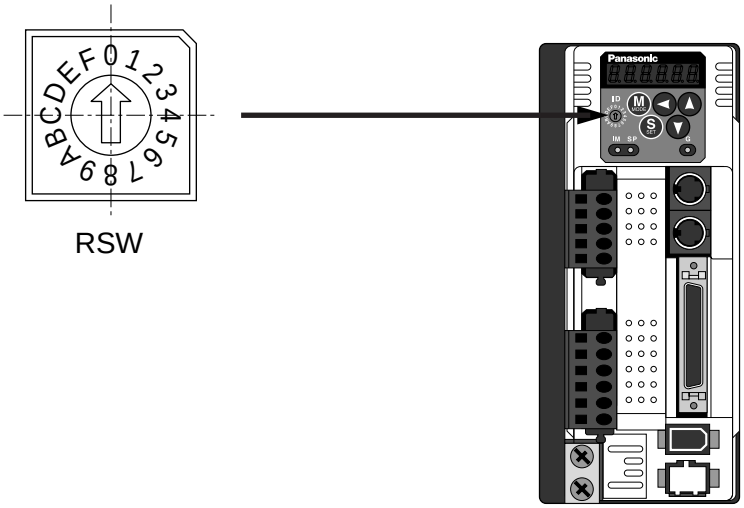

RSW

M * DD driver

Absolute System Configuration with RS232 Communication

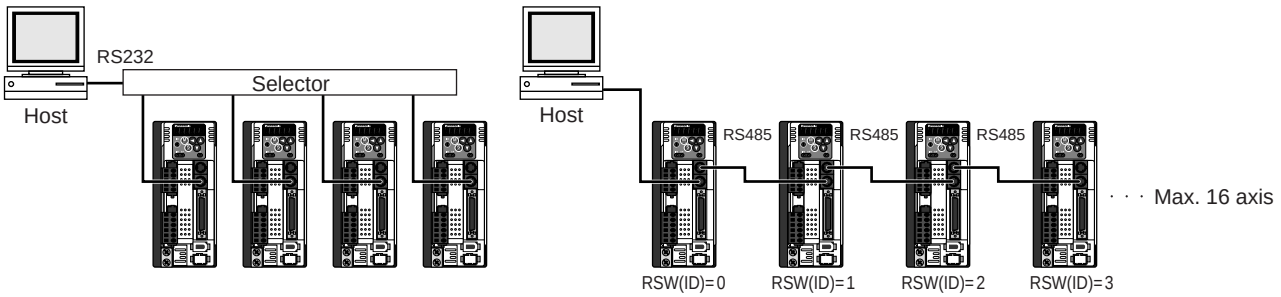

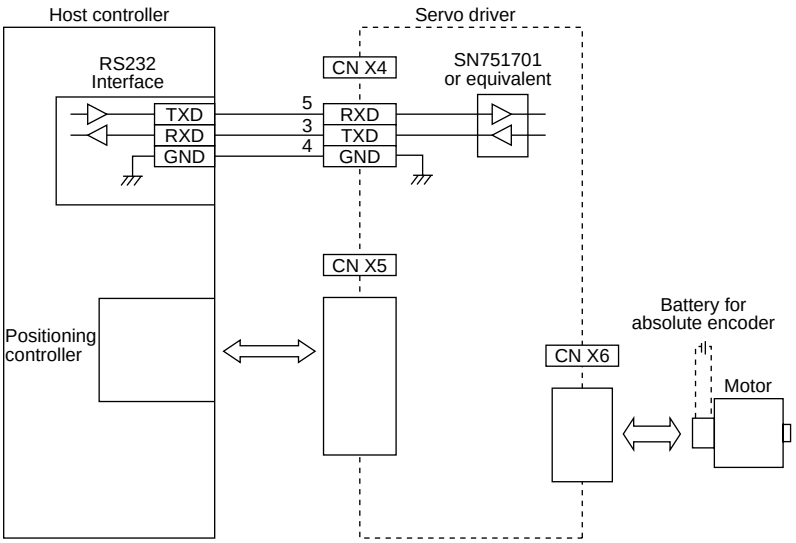

* Battery for absolute encoder is required to store the multi-turn data into the encoder. Connect the battery between BAT+ and BAT– of the motor.

Absolute System Configuration with RS485 Communication

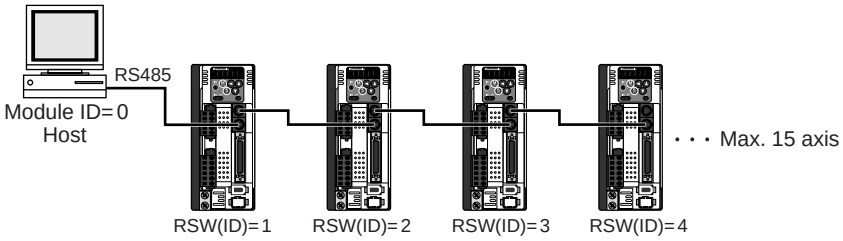

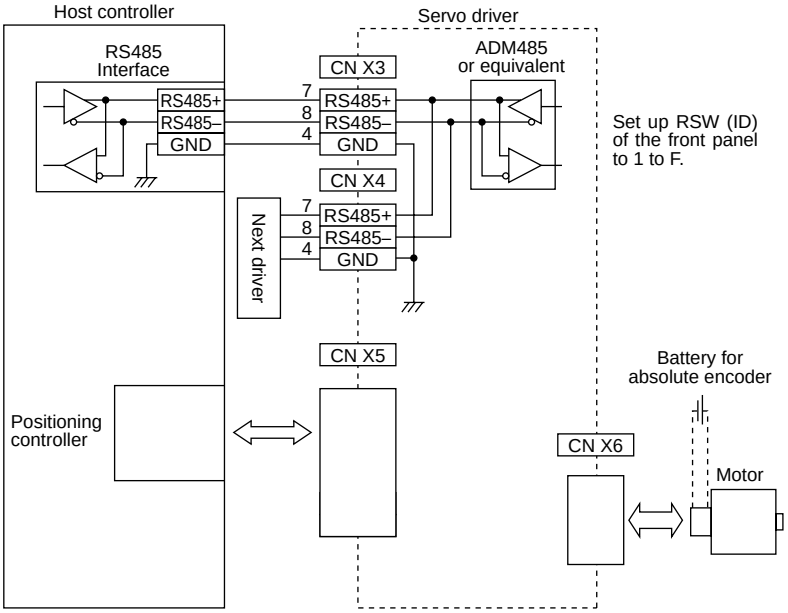

* Battery for absolute encoder is required to store the multi-turn data into the encoder. Connect the battery between BAT+ and BAT– of the motor.

Absolute System

Battery (for Backup) Installation

First Installation of the Battery

After installing and connecting the back-up battery to the motor, execute an absolute encoder setup. Refer to P.271, "Setup (initialization) of Absolute Encoder ".
It is recommended to perform ON/OFF action once a day after installing the battery for refreshing the battery.
A battery error might occur due to voltage delay of the battery if you fail to carry out the battery refreshment.

Replacement of the Battery

It is necessary to replace the battery for absolute encoder when battery alarm occurs.
Replace while turning on the control power. Data stored in the encoder might be lost when you replace the battery while the control power of the driver is off.
After replacing the battery, clear the battery alarm. Refer to P.275, "How to Clear the Battery Alarm".

<Caution>
When you execute the absolute encoder with the front panel (refer to P.77 of Preparation), or via communication (refer to P.302), all of error and multi-turn data will be cleared together with alarm, and you are required to execute " Setup (Initialization) of absolute encoder" (refer to P.271).

How to Replace the Battery

1) Refresh the new battery.

Connector with lead wire of the battery to CN601 and leave of 5 min. Pull out the connector from CN601 5 min after.

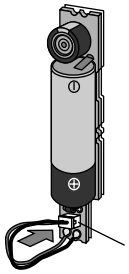

CN601
Pull out after 5 min.
connection

2) Take off the cover of the battery box.

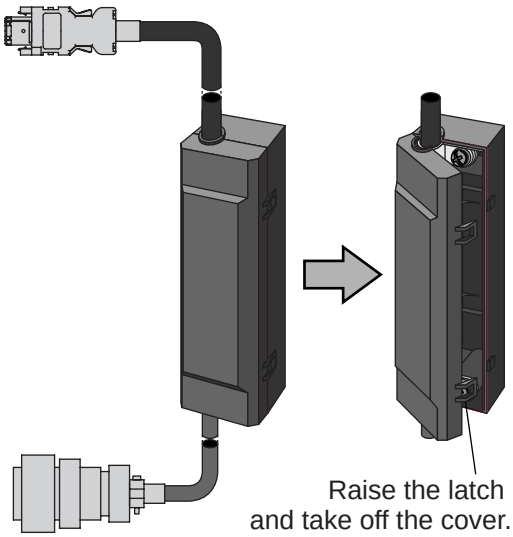

Raise the latch
and take off the cover.

3) Install the battery to the battery box.

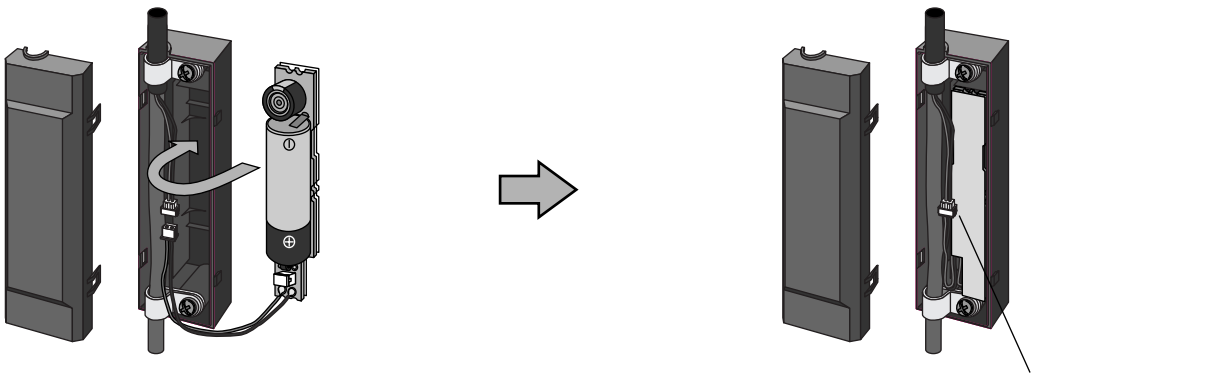

Place the battery with + facing downward.

Connect the connector.

4) Close the cover of the battery box.

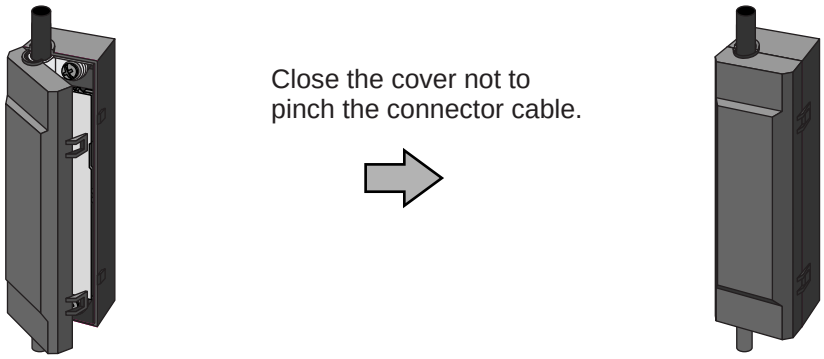

<Caution>
Use the following battery for absolute encoder.
Part No. : DV0P2990 (Lithium battery by Toshiba Battery Co., Ltd. ER6V, 3.6V 2000mAh)

<Cautions>

- Be absolutely sure to follow the precautions below since improper use of the battery can cause electrolyte to leak from the battery, giving rise to trouble where the product may become corroded, and/or the battery itself may rupture.
  1) Insert the battery with its " + " and " – " electrodes oriented correctly.
  2) Leaving a battery which has been used for a long period of time or a battery which is no longer usable sitting inside the product can cause electrolyte leakage and other trouble. For this reason, ensure that such a battery is replaced at an early date. (As a general guideline, it is recommended that the battery be replaced every two years.)
     - The electrolyte inside the battery is highly corrosive, and if it should leak out, it will not only corrode the surrounding parts but also give rise to the danger of short-circuiting since it is electrically conductive. For this reason, ensure that the battery is replaced periodically.
  3) Do not disassemble the battery or throw it into a fire.
     - Do not disassemble the battery since fragments of the interior parts may fly into your eyes, which is extremely dangerous. It is also dangerous to throw a battery into a fire or apply heat to it as doing to may cause it to rupture.
  4) Do not cause the battery to be short-circuited. Under no circumstances must the battery tube be peeled off.
     - It is dangerous for metal items to make contact with the " + " and " – " electrodes of the battery since such objects may cause a high current to flow all at once, which will not only reduce the battery performance but also generate considerable heat, possibly leading to the rupture of the battery.
  5) This battery is not rechargeable. Under no circumstances must any attempt be made to recharge it.
- The disposal of used batteries after they have been replaced may be subject to restrictions imposed by local governing authorities. In such cases, ensure that their disposal is in accordance with these restrictions.

Absolute System

< Reference>
Following example shows the life calculation of the back-up battery used in assumed robot operation. 2000[mAh] of battery capacity is used for calculation. Note that the following value is not a guaranteed value, but only represents a calculated value. The values below were calculated with only the current consumption factored in. The calculations do not factor in electrolyte leakage and other forms of battery deterioration.
Life time may be shortened depending on ambient condition.

1) 2 cycles/day

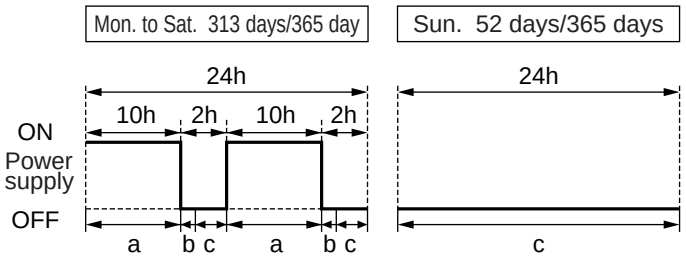

a : Current consumption in normal mode 3.6[μA]
b : Current consumption at power failure timer mode 280[μA]
* Power failure timer mode...Action mode in time period when the motor can respond to max. speed even the power is off (5sec).
c : Current consumption at power failure mode 110[μA]

Annual consumption capacity = (10h x a + 0.0014h x b + 2h x c) x 2 x 313 days + 24h x c x 52 days = 297.8[mAh])
Battery life = 2000[mAh] /297.8[mAh] = 6.7 (6.7159) [year]

2) 1 cycle/day

(2nd cycle of the above 1) is for rest.

Annual consumption capacity = (10h x a + 0.0014h x b + 14h x c) x 313 days + 24h x c x 52 days = 640.6[mAh])
Battery life = 2000[mAh] /630.6[mAh] = 3.1 (3.1715) [year]

When you make your own cable for 17-bit absolute encoder

When you make your own cable for 17-bit absolute encoder, connect the optional battery for absolute encoder, DV0P2060 or DV0P2990 as per the wiring diagram below. Connector of the battery for absolute encoder shall be provided by customer as well.

<Cautions>

Install and fix the battery securely. If the installation and fixing of the battery is not appropriate, it may cause the wire breakdown or damage of the battery.
Refer to the instruction manual of the battery for handling the battery.

- **Installation Place**

1) Indoors, where the products are not subjected to rain or direct sun beam.
2) Where the products are not subjected to corrosive atmospheres such as hydrogen sulfide, sulfurous acid, chlorine, ammonia, chloric gas, sulfuric gas, acid, alkaline and salt and so on, and are free from splash of inflammable gas, grinding oil, oil mist, iron powder or chips and etc.
3) Well-ventilated and humid and dust-free place.
4) Vibration-free place

Wiring Diagram

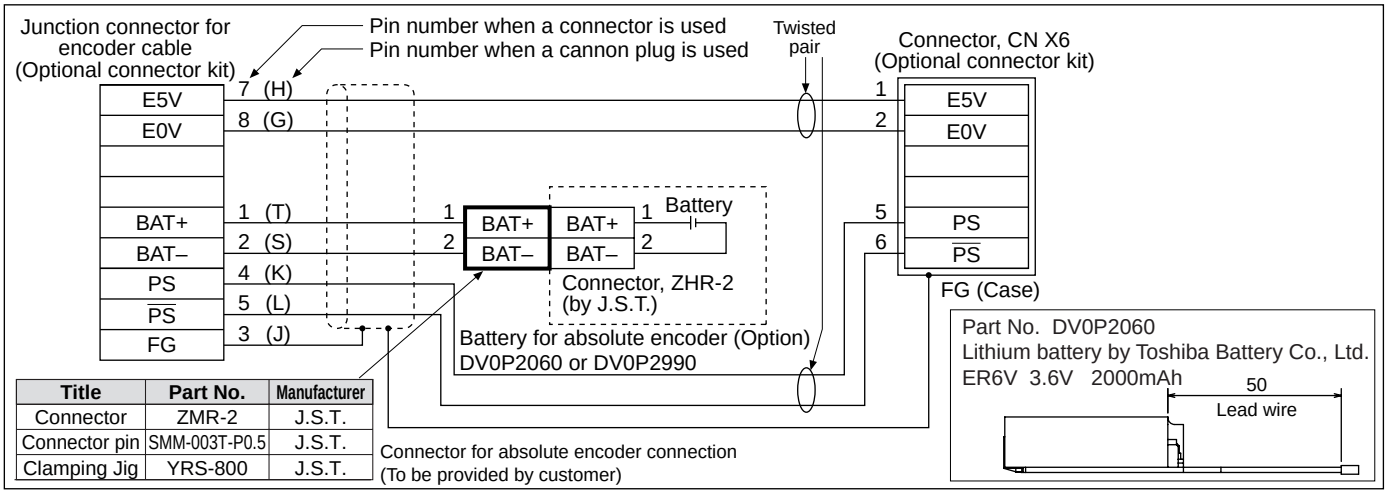

Title	Part No.	Manufacturer
Connector	ZMR-2	J.S.T.
Connector pin	SMM-003T-P0.5	J.S.T.
Clamping Jig	YRS-800	J.S.T.

Setup (Initialization) of Absolute Encoder

Execute the setup of absolute encoder in the following cases.

- Initial setup of the machine
- When absolute system down error protection (alarm No. 40) occurs
- When the encoder cable is pulled out

In the above setup, it is required to make multi-turn data to 0 after clearing the encoder error by clearing absolute encoder while the machine stops at the origin position with homing operation. Clear the absolute encoder with the front panel operation or with the PANATERM operation. After the clearing, turn off the power and turn on the power again.

Setup Operation of Absolute Encoder

(1) Turn on the power to bring he machine to origin position by homing operation.

(2) Make the front panel to auxiliary function mode and bring EXECUTION display of "Absolute encoder clear mode". Refer to P.51, "Setup of Parameter and Mode" of Preparation.

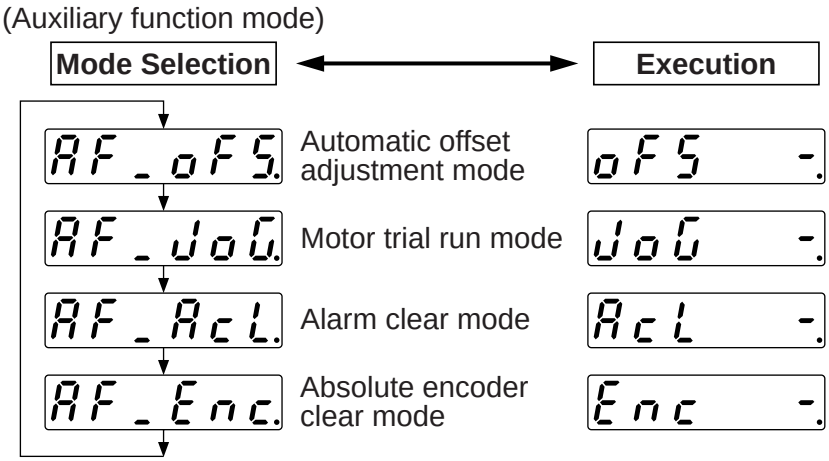

(3) Execute the following key operation at EXECUTION DISPLAY

Bars increase while keep pressing ▲ (approx. 3sec).

Absolute encoder clearing starts.

Absolute encoder clearing finishes in a second.

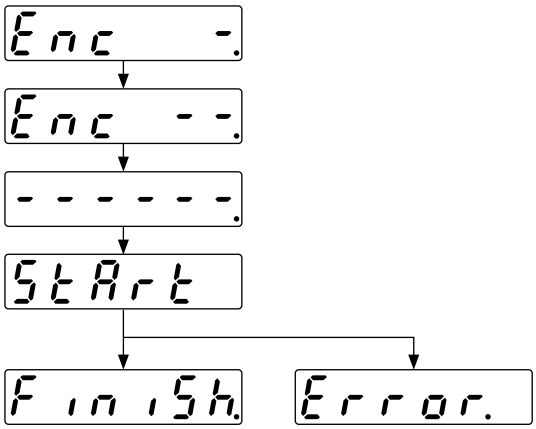

Note) In case of incremental encoder, Error. display appears when absolute encoder clear starts.

(4)Turn off the control power once, then re-enter the power.

Absolute System

Transmission and Reception Sequence of Absolute Data

Servo-Ready output will be turned on 2sec. after the control power is turned on. Capture the absolute data in the following communication protocol while the Servo-Ready output is on and the fix the motor with brake by Servo-Off (when the motor is at complete stall.).

RS232 Communication Protocol

Refer to the instruction manual of the host for the transmission/reception method of command.

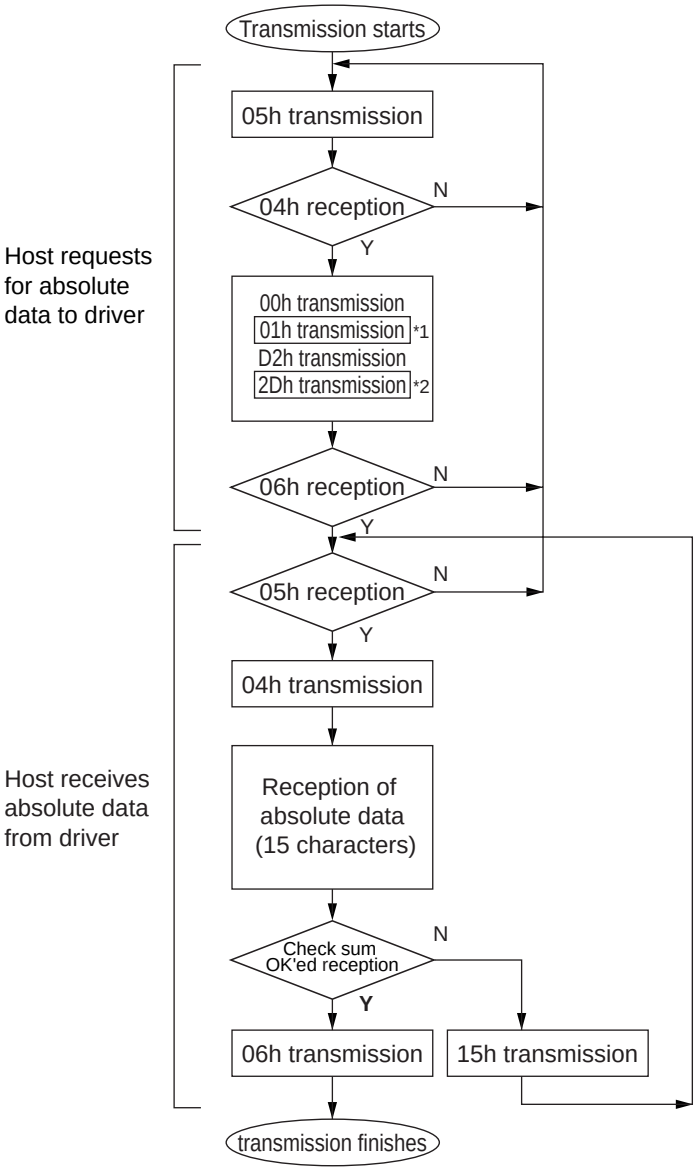

Data of *1 and *2 are determined by the setup of RSW (ID) of the front panel.

RSW(ID)	Data of * 1	Data of * 2
0	00h	2Eh
1	01h	2Dh
2	02h	2Ch
3	03h	2Bh
4	04h	2Ah
5	05h	29h
6	06h	28h
7	07h	27h
8	08h	26h
9	09h	25h
A	0Ah	24h
B	0Bh	23h
C	0Ch	22h
D	0Dh	21h
E	0Eh	20h
F	0Fh	1Fh

Check sum becomes OK'ed when the lower 8-bit of the sum of the received absolute data (15 characters) is 0.

Enter the RSW value of the driver to which you want to communicate from the host to axis (*1 data) of the command block, and transmit the command according to the RS232 communication protocol. For details of communication, refer to P.278, "Communication".

- **Allow 500ms or longer interval for axis switching when you want to capture multiple axes data.**
- **It is recommended for you to repeat the above communication more than 2 times to confirm the absolute data coincide, in order to avoid mis-operation due to unexpected noise.**

RS485 Communication Protocol

Refer to the instruction manual of the host for the transmission/reception method of command.
Following shows the communication example of the driver to RSW (ID).

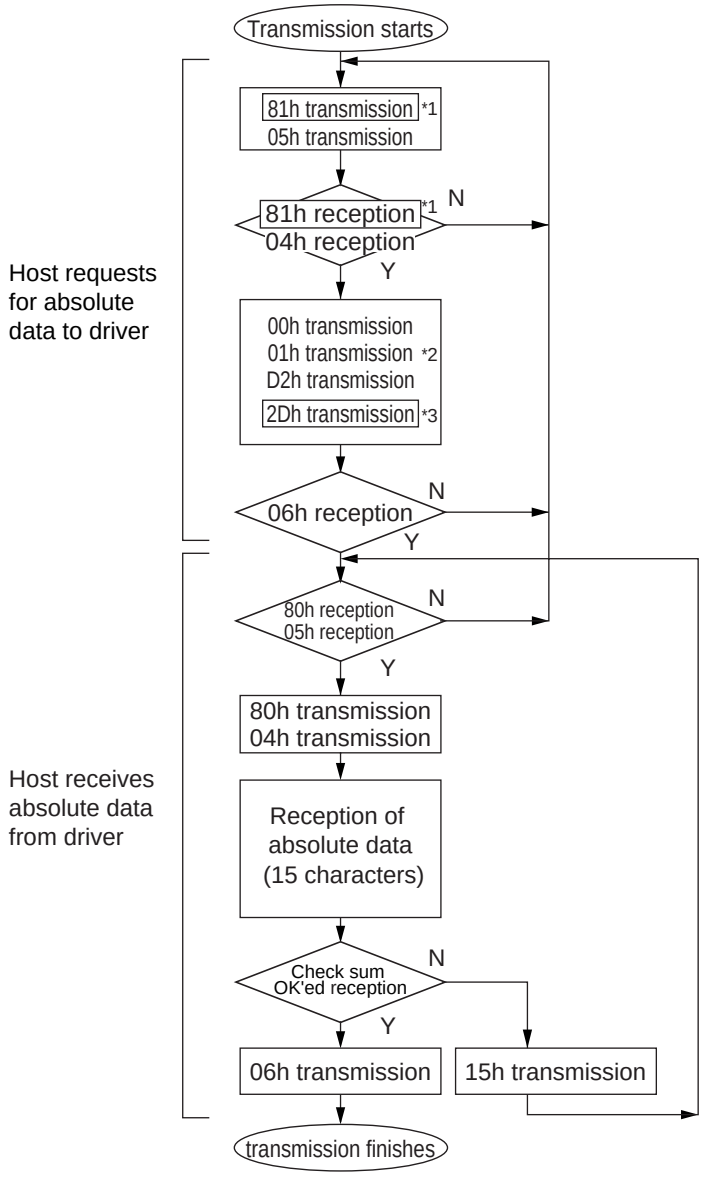

Data of *1 and *2 are determined by the setup of RSW (ID) of the front panel.

RSW(ID)	Data of * 1	Data of * 2	Data of * 3
0	not usable with RS485 communication		
1	81h	01h	2Dh
2	82h	02h	2Ch
3	83h	03h	2Bh
4	84h	04h	2Ah
5	85h	05h	29h
6	86h	06h	28h
7	87h	07h	27h
8	88h	08h	26h
9	89h	09h	25h
A	8Ah	0Ah	24h
B	8Bh	0Bh	23h
C	8Ch	0Ch	22h
D	8Dh	0Dh	21h
E	8Eh	0Eh	20h
F	8Fh	0Fh	1Fh

Check sum becomes OK'ed when the lower 8-bit of the sum of the received absolute data (15 characters) is 0.

Command from the host will be transmitted to the desired driver based on RS485 transmission protocol.
For details of communication, refer to P.278, "Communication".

- **Allow 500ms or longer interval for axis switching when you want to capture multiple axes data.**
- **It is recommended for you to repeat the above communication more than 2 times to confirm the absolute data coincide, in order to avoid mis-operation due to unexpected noise.**

Absolute System

Composition of Absolute Data

Absolute data consists of singe-turn data which shows the absolute position per one revolution and multi-turn data which counts the number of revolution of the motor after clearing the encoder.

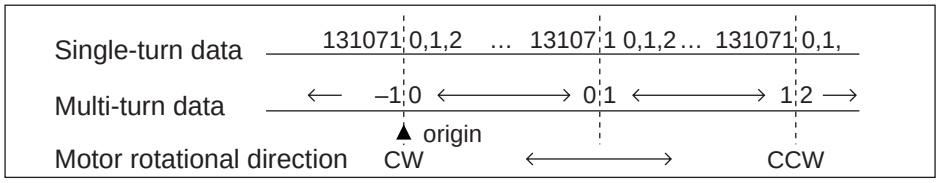

Single-turn data and multi-turn data are composed by using 15-character data (hexadecimal binary code) which are received via RS232 or RS485.

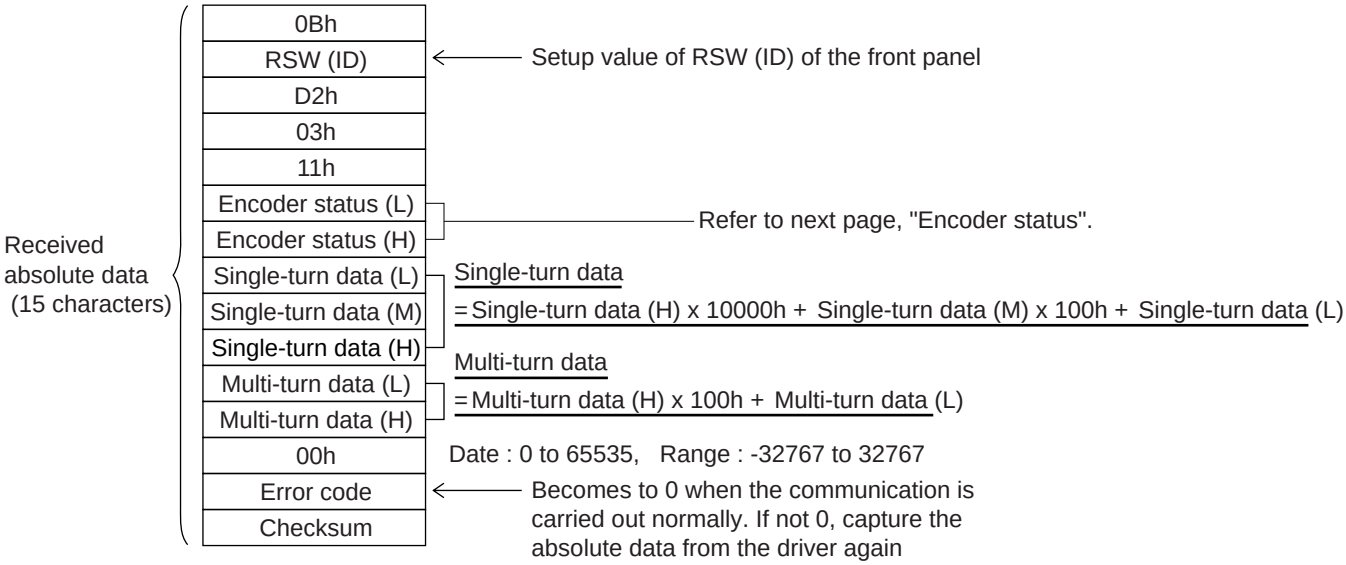

• Details of multi-turn data

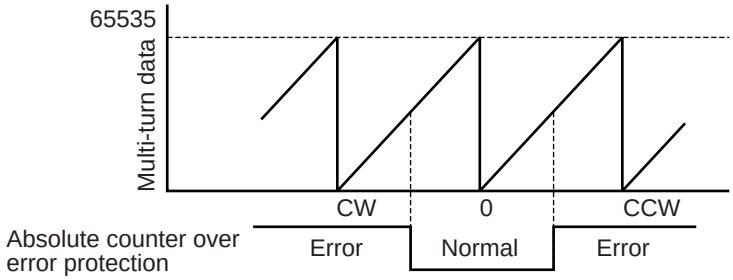

<Remark>

If the multi-turn data of the above fig. is between 32768 and 65535, convert it to signed date after deducting 65536.

• Encoder status (L)-----1 represents error occurrence.

Encoder status (L)							
bit7	bit6	bit5	bit4	bit3	bit2	bit1	bit0
			0				

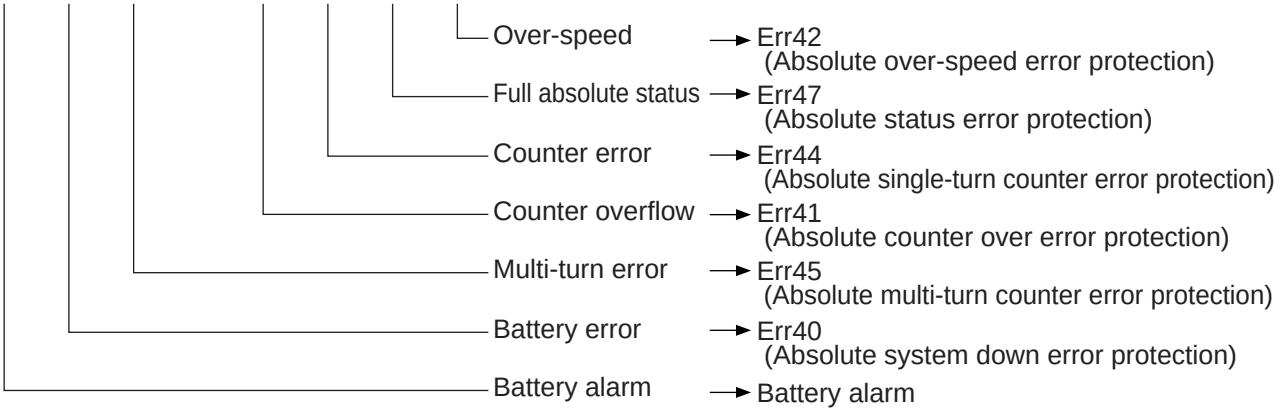

• Encoder status (L)-----1 represents error occurrence.

Encoder status (L)							
bit7	bit6	bit5	bit4	bit3	bit2	bit1	bit0
0	0			0	0	0	0

Battery error

One of the following has occurred.
Battery alarm, multi-turn error, counter overflow,
counter error, full absolute status, Counter overflow
multi-turn error, battery error or battery alarm

• Transmit the absolute data while fixing the motor with brake by turning to Servo-Off.

<Note>
For details of the above error protection, refer to P.252, "Protective Function" of When in Trouble, and for contents of alarms, refer to the following "Display of Battery Alarm".

Display of Battery Alarm

Following alarm will be displayed when making the front panel to alarm execution mode of monitor mode.

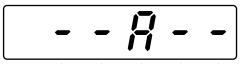

- ... No alarm, A .... Alarm occurrence

Over regeneration alarm : Regeneration has exceeded 85% of the alarm trigger level of over regeneration load protection.

Overload alarm : Load has exceeded 85% of the alarm trigger level of overload protection.

Battery alarm : Voltage of battery for absolute encoder has fallen below the alarm level (approx. 3.2V).

Fan lock alarm : Fan has stalled for more than 1[s] .

External scale alarm : Temperature of external scale has exceeded 65˚C or signal intensity have not been enough.
(Mounting adjustment is required.)

How to Clear the Battery Alarm

Replace the battery for absolute encoder when battery alarm occurs according to P.268, "How to Replace the Battery". After replacement, clear the battery alarm in the following 3 methods.

(a) "CN X5" Connecting Alarm clear input (A-CLR) to COM– for more than 120ms.
(b) Executing the alarm clear function in auxiliary function mode by using the console (option).
(c) Click the "Battery warning" Clear button, after select the "Absolute encoder" tab in the monitor display window by using the PANATERM (option).

Outline of Setup Support Software, "PANATERM®"

Outline of PANATERM®

With the PANATERM®, you can execute the followings.
(1) Setup and storage of parameters, and writing to the memory (EEPROM).
(2) Monitoring of I/O and pulse input and load factor.
(3) Display of the present alarm and reference of the error history.
(4) Data measurement of the wave-form graphic and bringing of the stored data.
(5) Normal auto-gain tuning
(6) Frequency characteristic measurement of the machine system.

How to Connect

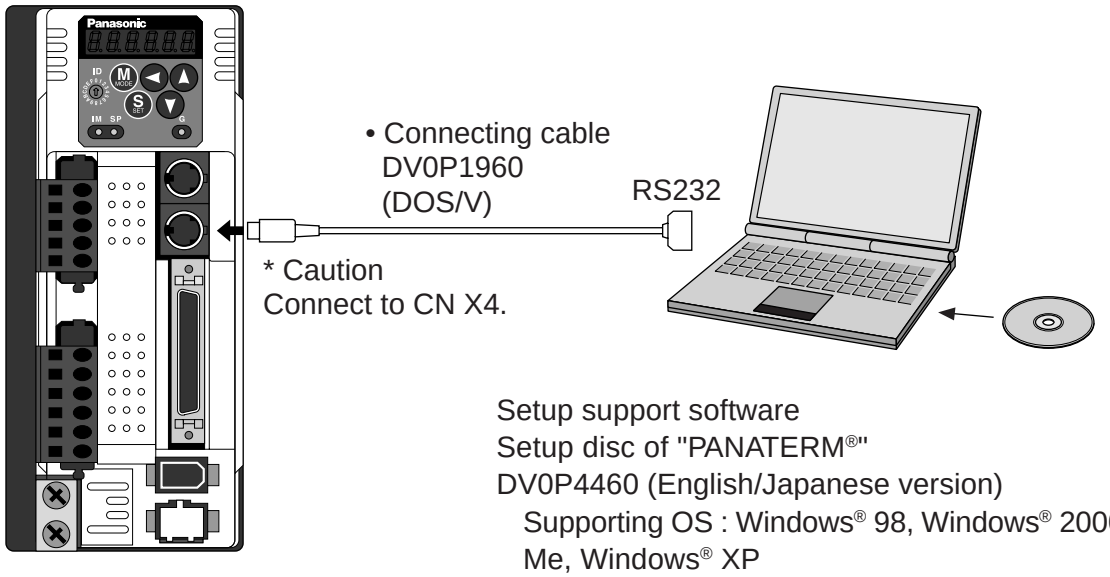

Setup support software
Setup disc of "PANATERM®"
DV0P4460 (English/Japanese version)
Supporting OS : Windows® 98, Windows® 2000, Windows® Me, Windows® XP

<Caution>
* Don't connect to CN X3.
Display of "Communication port or driver cannot be detected." appears even though you log on "PANATERM®".

Install the "PANATERM®" to Hard Disc

<Cautions/Notes>
1. 15MB capacity of hard disc is required. OS to be Window® 98, Windows® 2000, Windows® Me or Windows® XP.
2. Install the "PANATERM®" to a hard disc, using the setup disc according to the procedures below to log on.
3. Part No. of the "PANATERM®" may be changed based on the version up. Refer to the catalog for the latest part No.

Procedure of install

1) Turn on the power of the computer to log on the supporting OS. (Exit the existing logged on software.)
2) Insert the setup disc of the "PANATERM®" to CD-ROM drive.
3) The window opens automatically so click the name of the file required.
   * If the window fails to appear automatically, start up Explorer, and run the targeted setup file.
4) Operate according to the guidance of the setup program.
5) Click [OK] on the installation verification window to start the setup.
6) Exit all applications and log on Windows® again.
   "PANATERM®" will be added on program menu when you log on again.

Log on of the "PANATERM®" .

<Cautions/Notes>

1. Once the "PANATERM®" is installed in the hard disc, you do not need to install every time you log on.
2. Connect the driver to a power supply, the motor and encoder before you log on.
   Refer to the instruction manual of supporting OS for start.

Procedure of log on

1) Turn on the power of the computer and log on the supporting OS.
2) Turn on the power of the driver.
3) Click the start bottom of the supporting OS.
   (Refer to the instruction manual of supporting OS for start.)
4) Select the "PANATERM®" with program ► and click.
5) The screen turns to "PANATERM®" after showing opening splash for approx. 2sec.

For more detailed information for operation and functions of the "PANATERM®", refer to the instruction manual of the Setup Support Software, "PANATERM®".

* Windows®, Windows® 98, Windows® 2000, Windows® Me and Windows® XP are trade marks of Microsoft Corp.

Communication

Outline of Communication

You can connect up to 16 MINAS-A4 series with your computer or NC via serial communication based on RS232 and RS484, and can execute the following functions.

(1) Change over of the parameters
(2) Referring and clearing of alarm data status and history
(3) Monitoring of control conditions such as status and I/O.
(4) Referring of the absolute data
(5) Saving and loading of the parameter data

Merits

- You can write parameters from the host to the driver in batch when you start up the machine.
- You can display the running condition of machine to improve serviceability.
- You can compose multi-axis absolute system with simple wiring.

Following application software and cables are prepared as options. For the operation of the "PANATERM®, refer to the instruction manual of the PANATERM®.

"PANATERM®" English/Japanese version (Windows 98/Me/2000/XP)	DV0P4460
Connecting cable for PC (DOS/V)	DV0P1960
Connecting cable between drivers	DV0P1970 (200[mm])
	DV0P1971 (500[mm])
	DV0P1972 (1000[mm])

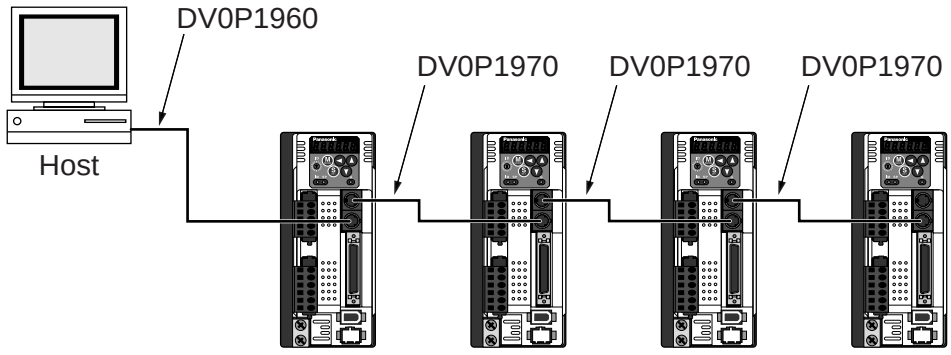

Communication Specifications

Connection of Communication Line

MINAS-A4 series provide 2 types of communications ports of RS232 and RS485, and support the following 3 types of connection with the host.

- **RS232 communication**

  Connect the host and the driver in one to one with RS232, and communicate according to RS232 transmission protocol.

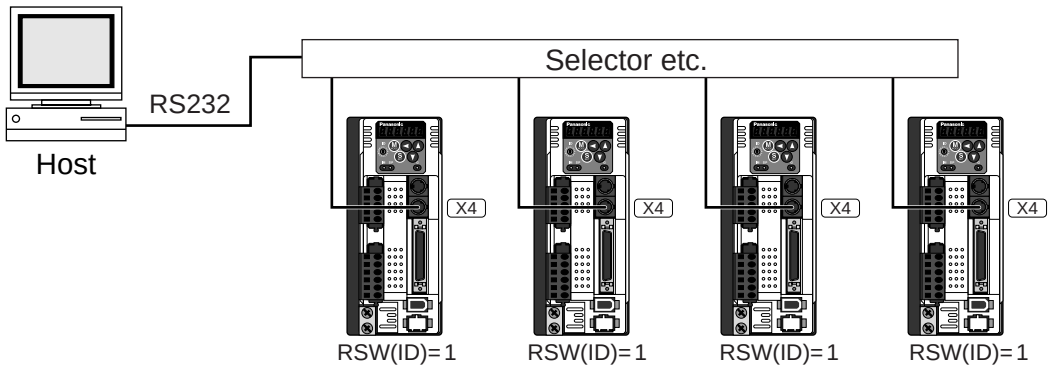

  • Set up the module ID of MINAS-A4 to RSW of the front panel. In the above case, you can set any value of 0 to F. You can set the same module ID as long as the host has no difficulty in control.

- **RS232 and RS485 communication**

  When you connect one host to multiple MINAS-A4s, connect the host to connector X4 of one driver with RS232 communication, and connect each MINAS-A4 with RS485 communication. Set up the RSW of the driver to 0 which is connected to the host, and set up 1 to F to other drivers each.

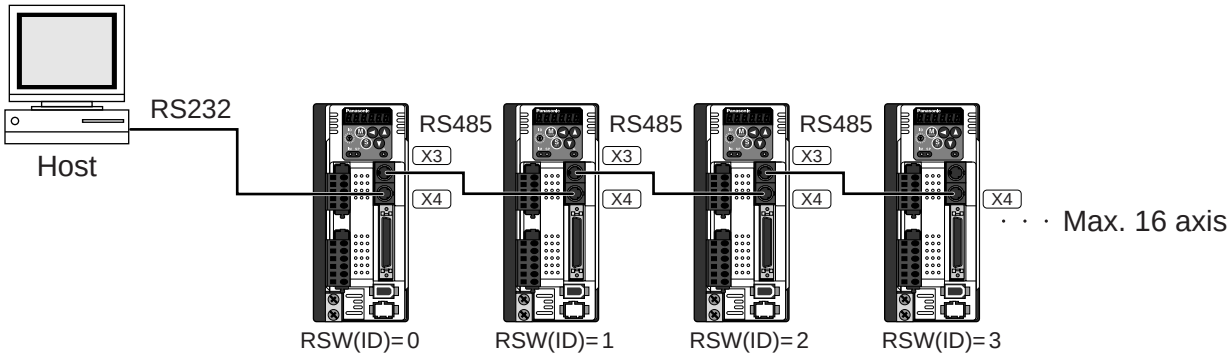

- **RS485 communication**

  Connect the host to multiple MINAS-A4s with RS485 communication, set up the RSW of each front panel of MINAS-A4 to 1 to F.

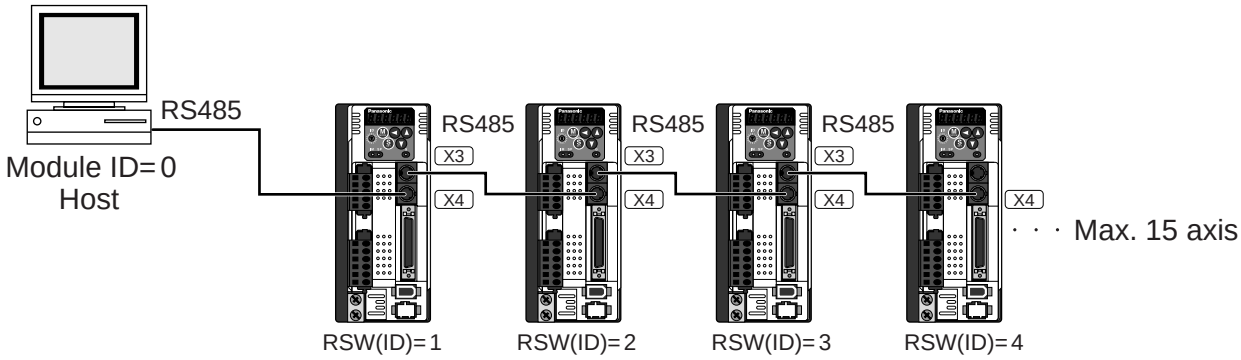

Allow 500ms or longer interval for switching the axes while capturing data of multiple axes.

Communication

Interface of Communication Connector

• Connection to the host with RS232

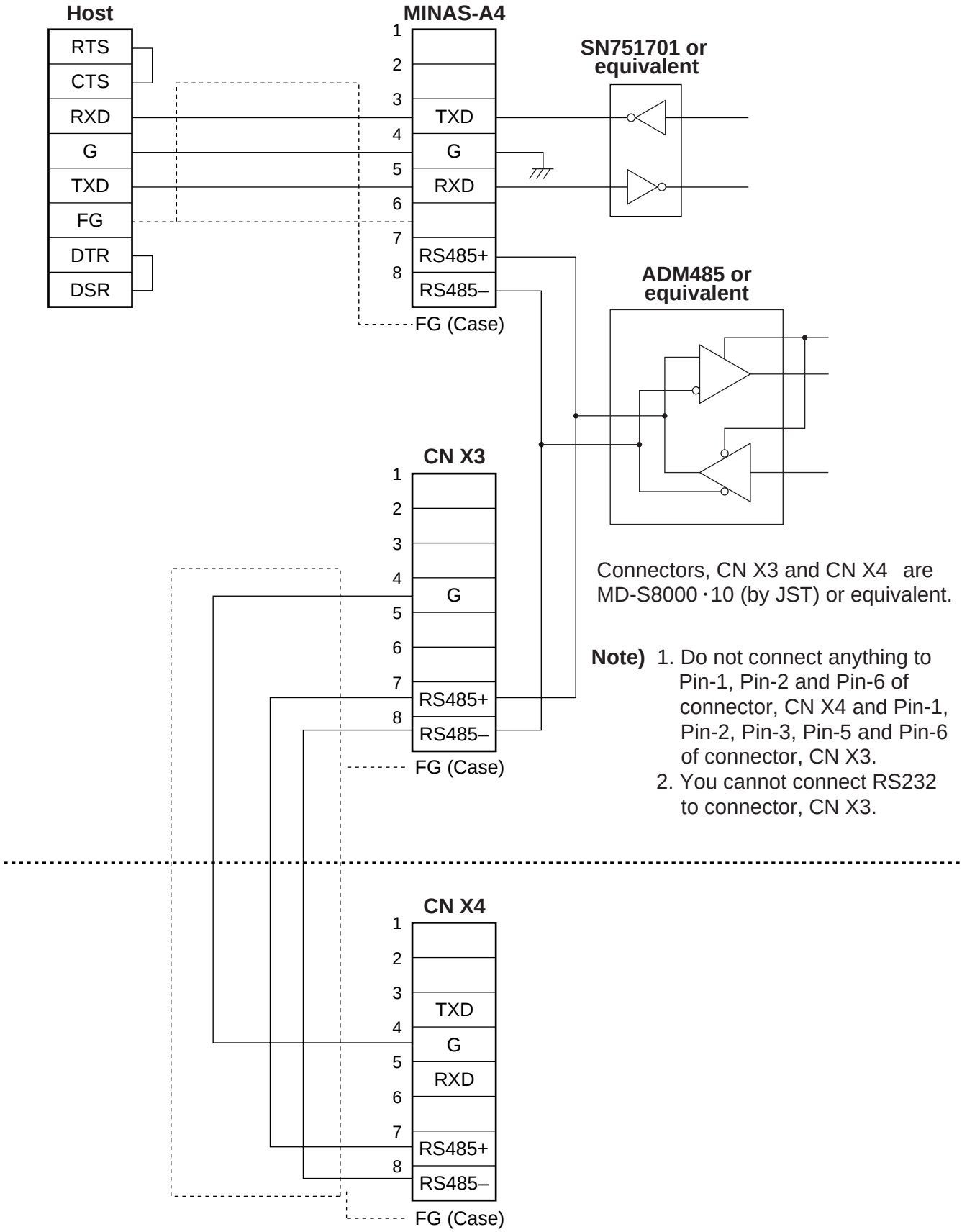

Connectors, CN X3 and CN X4 are MD-S8000・10 (by JST) or equivalent.

Note) 1. Do not connect anything to Pin-1, Pin-2 and Pin-6 of connector, CN X4 and Pin-1, Pin-2, Pin-3, Pin-5 and Pin-6 of connector, CN X3.
2. You cannot connect RS232 to connector, CN X3.

• Connection to the host with RS485

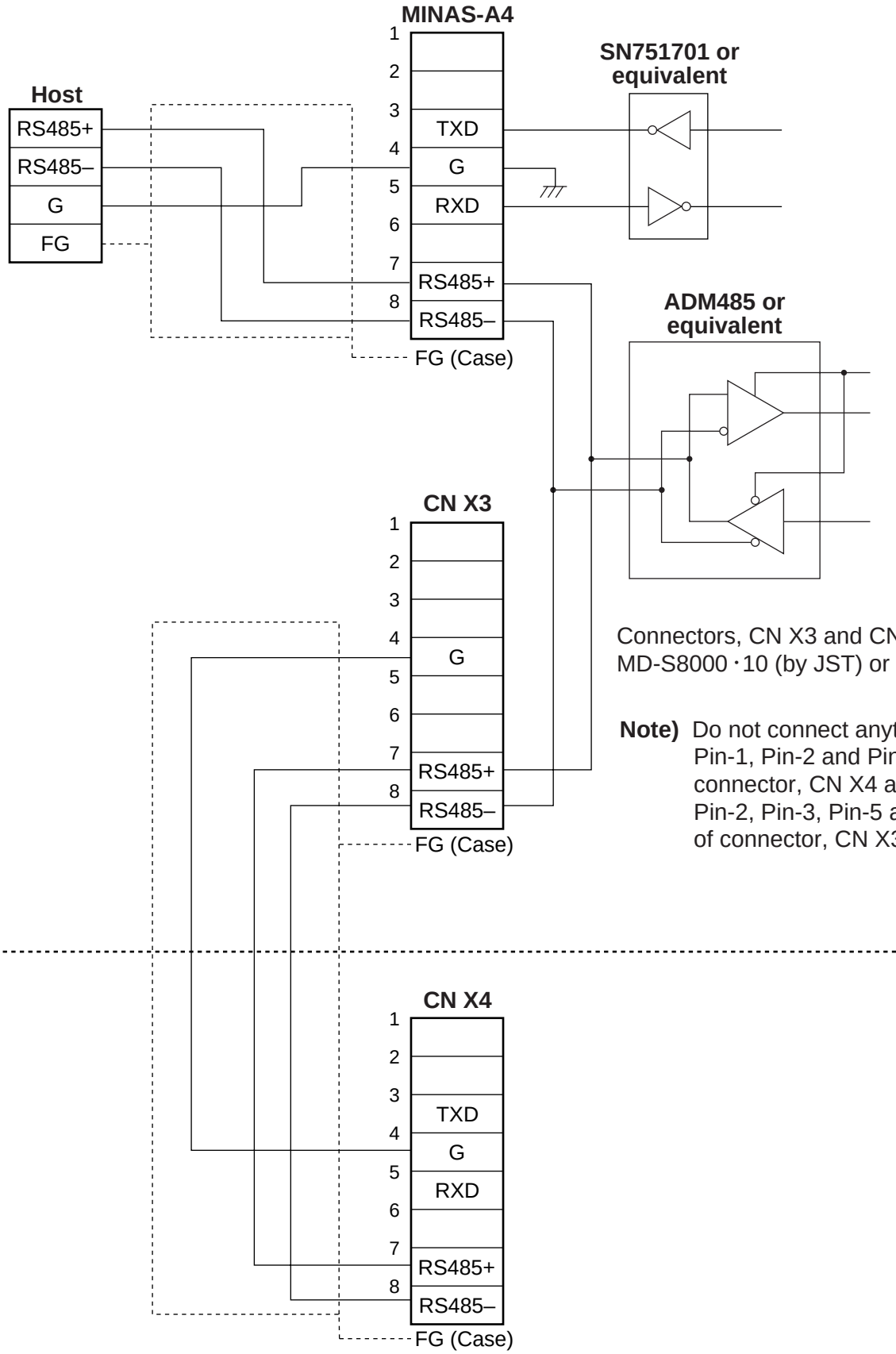

Connectors, CN X3 and CN X4 are MD-S8000・10 (by JST) or equivalent.

Note) Do not connect anything to Pin-1, Pin-2 and Pin-6 of connector, CN X4 and Pin-1, Pin-2, Pin-3, Pin-5 and Pin-6 of connector, CN X3.

Communication

Communication Method

	RS232	RS485
	Full duplex, asynchronous	Half duplex, asynchronous
Communication baud rate	2400,4800,9600,19200,38400,57600bps	2400,4800,9600,19200,38400,57600bps
Data	8 bit	8 bit
Parity	none	none
Start bit	1 bit	1 bit
Stop bit	1 bit	1 bit

• Set up the RS232 communication baud rate with Pr0C, and RS485 communication baud rate with Pr0D. The change of these parameters will be validated after the control power entry. For details, refer to the following list of parameters related to communication.

List of User Parameters for Communication

PrNo.	Title of parameter	Setup range	Functions/contents
00	Axis address	0 – 15	Check the RSW (ID) value of the front panel at control power-on. This value becomes the axis number at serial communication. Setup value of this parameter has no effect to servo action.
0C	Baud rate setup of RS232 communication	0 – 5	Set up the communication speed of RS232C communication. 0 : 2400[bpps] , 1 : 4800[bps] , 2 : 9600[bps] , 3 : 19200[bps] , 4 : 38400[bps] , 5 : 57600[bps] Change will be validated after the control power-on
0D	Baud rate setup of RS485 communication	0 – 5	Set up the communication speed of RS485 communication. 0 : 2400[bpps] , 1 : 4800[bps] , 2 : 9600[bps] , 3 : 19200[bps] , 4 : 38400[bps] , 5 : 57600[bps] Change will be validated after the control power-on

• Required time for data transmission per 1 byte is calculated in the following formula in case of 9600[bps] .

1000 / 9600 x (1 + 8 + 1) = 1.04 [ms/byte]

Start bit — Data — Stop bit

Note that the time for processing the received command and time for switching the line and transmission/ reception control will added to the actual communication time.

• Handshake code

Following codes are used for line control.

Title	Code	Function
ENQ	05h (Module recognition byte of the transmitted)	Enquire for transmission
EOT	04h (Module recognition byte of the transmitted)	Ready for receiving
ACK	06h	Acknowledgement
NAK	15h	Negative acknowledgement

ENQ ... The module (host or driver) sends out ENQ when it has a block to send.
EOT .... The module (host or driver) sends out EOT when it is ready to receive a block. The line enters to a transmission mode when ENQ is transmitted and EOT is received.
ACK .... When the received block is judged normal, the module (host or driver) will send out ACK.
NAK .... When the received block is judged abnormal, NAK will be sent. A judgment is based on checksum and timeout.

<Caution>

1 byte of module recognition is added to ENQ and EOT at RS485 communication.
Module recognition byte... Make the RSW value of the front panel as a module ID, and data which makes its bit7 as 1, becomes a module recognition byte.

bit7	bit6	bit5	bit4	bit3	bit2	bit1	bit0
1	0	0	0	Module ID			

Module ID : The module ID of the host side will be 0 in case of RS485 communication, therefore set up RSW of MINAS-A4 to 1- F.

Transmission Sequence

• Transmission protocol

• In case of RS232

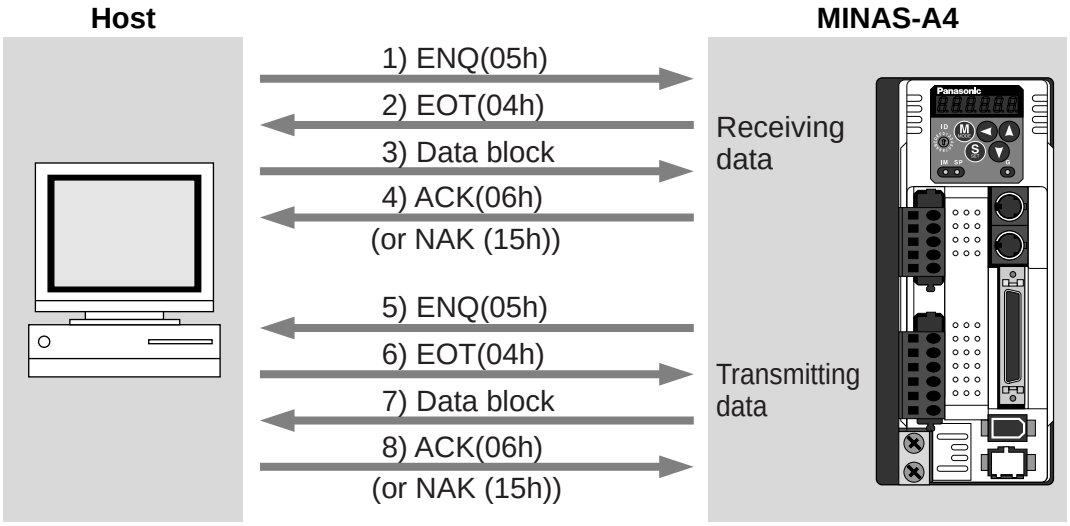

• In case of RS485

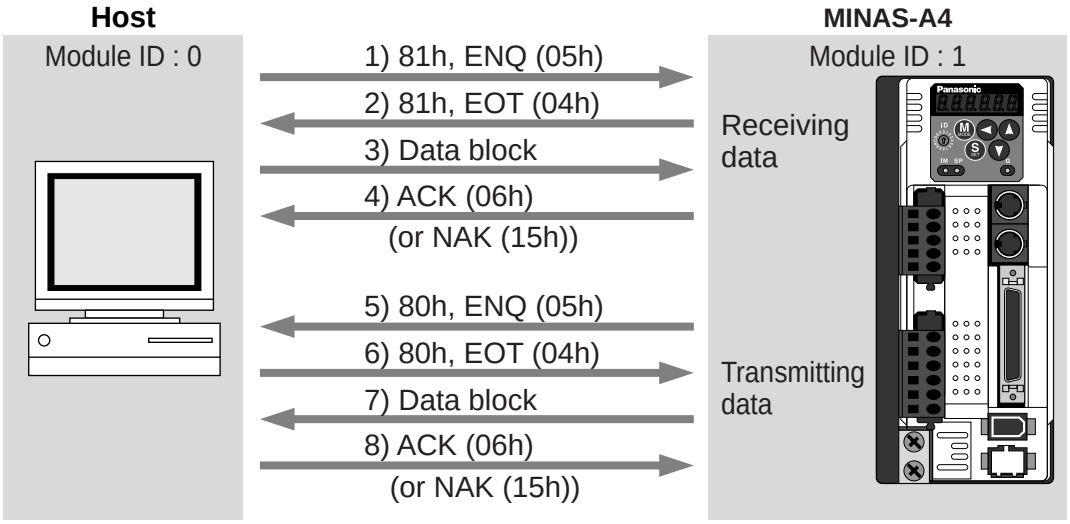

• Line control

Decides the direction of transmission and solves the contention.
Reception mode... From when the module (host or driver) returns EOT after receiving ENQ.
Transmission mode... From when the module (host or driver) receives EOT after transmitting ENQ.
At contention of transmission and reception... Slave side will enter to reception mode when it receives ENQ while waiting for EOT after transmitting ENQ, by giving priority to ENQ (of master side).

• Transmission control

On entering to transmission mode, the module transmits the command block continuously and then waits for ACK reception. Transmission completes at reception of ACK.. ACK may not be returned at transmission failure of command byte counts. If no ACK is received within T2 period, or other code than NAK or ACK is received, sequence will be retried. Retry will start from ENQ.

• Reception control

On entering to reception mode, the module receives the transmitted block continuously. It will receive the command byte counts from the first byte, and continuously receive extra 3 bytes. It will return ACK when the received data sum becomes 0, by taking this status as normal. In case of a check sum error or a timeout between characters, it will return NAK.

• Data Block Composition

Below shows the composition of data block which is transmitted in physical phase.

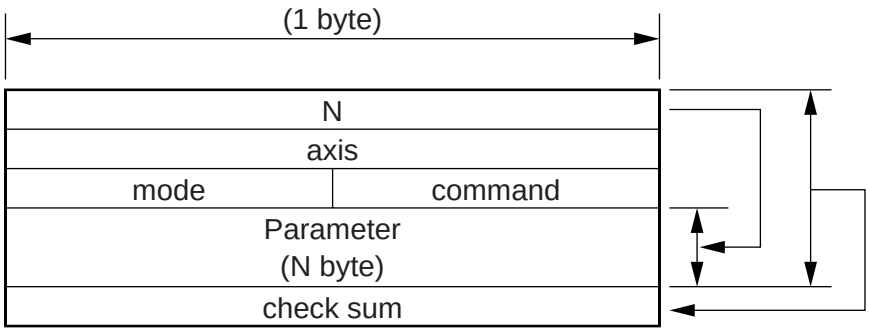

N : Command byte counts (0 to 240)
Shows the number of parameters which are required by command.
axis : Sets up the value of RSW of the front panel (Module ID,
command : Control command (0 to 15)
mode : Command execution mode (0 to 15)
Contents vary depending on the mode.
check sum : 2's complement of the total number of bytes, ranging from the top to the end of the block

• Protocol Parameter

Following parameters are used to control the block transmission. You can set any value with the INIT command (described later).

Title	Function		Initial value	Setup range	Unit
T1	Time out between characters	RS232	5 (0.5 sec)	1–255	0.1 sec
		RS485	1 (0.1 sec)		
T2	Protocol time out	RS232	5 (0.5 sec)	1–255	1 sec
		RS485	1 (0.1 sec)		
RTY	Retry limit		1 (once)	1–8	
M/S	Master/Slave		0 (Slave)	0, 1 (Master)	Once

T1 ..... • Permissible time interval for this driver to receive the consecutive character cods which exists between the module recognition bytes and ENQ/EOT, or in the transmission/reception data block. Time out error occurs and the driver returns NAK to the transmitter when the actual reception time has exceeded this setup time

T2 ..... • Permissible time interval for the driver to transmit ENQ and to receive EOT. If the actual reception time exceeds this setup, this represents that the receiver is not ready to receive, or it has failed to receive ENQ code in some reason, and the driver will re-transmit ENQ code to the receiver. (retry times)
• Permissible time interval for the driver to transmit EOT and to receive the reception of the 1st character code. The driver will return NAK and finishes the reception mode if the actual reception has exceeded this setup time.
• Permissible time interval for the module to transmit the check sum bytes and to receive ACK. The module will re-transmit ENQ code to the receiver in the same way as the NAK reception, if the actual reception time exceeds this setup time.

RTY .... Maximum value of retry times. Transmission error occurs if the actual retry has exceeds this setup value.

M/S ..... Switching of master and slave. When contention of ENQ has occurred, the module decides which is to be given priority.
Priority is given to the transmitter which is set up as a master. (0: Slave mode, 1 : Master mode)

Example of Data Communication

• e.g. Reference of Absolute Data

When you connect the host to one driver with RS232 communication, and connect multiple MINAS-A4s with RS485 communication. Following flow chart describes the actual flow of the communication data when you want to capture the absolute data of the module ID= 1.

e.g. of system composition

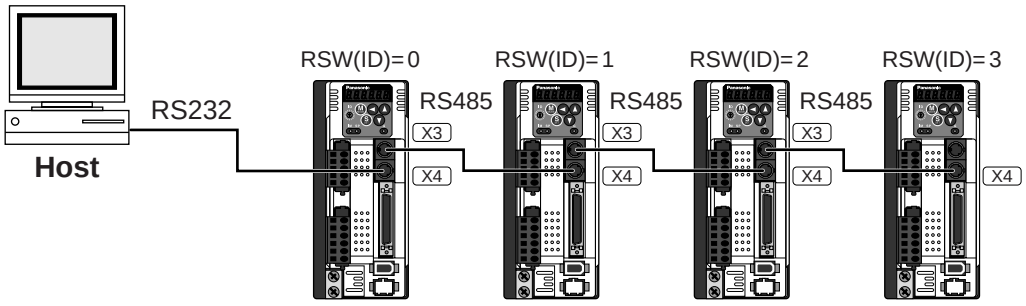

e.g. of capturing the absolute data

Following shows the communication data in time series when you want to capture the absolute data. Data is presented in hexadecimals.

RS232 communication

Host →	05 (ENQ)		00	01	D2	2D				04 (EOT)		
MINAS-A4 (0) ←		04 (EOT)					06 (ACK)	05 (ENQ)			0B	01	D2

Obtain data with RS485 (see the below)

Host →												06 (ACK)
MINAS-A4 (0) ←	03	11	00	00	D8	FF	01	00	00	00	00	36

* RS485 communication

MINAS-A4 (0) →	81 (ENQ)	05		00	01	D2	2D				80 (EOT)	04
MINAS-A4 (1) ←			81 (EOT)	04				06 (ACK)	80 (ENQ)	05		
MINAS-A4 (0) →												
MINAS-A4 (1) ←	0B	01	D2	03	11	00	00	D8	FF	01	00	00
MINAS-A4 (0) →					06 (ACK)							
MINAS-A4 (1) ←	00	00	36									

<Caution>

See the below for the captured data. Refer to P.299, "Read out of Absolute Encoder " of details of communication command, for the data composition.

Multi-turn data : 0000h = 0

Single turn data : 01FFD8h = 131032

Allow 500ms or longer interval for switching the axis while capturing data of multiple axes.

• Example of Parameter Change

Following shows the communication data in time series when you change parameters. Communication in general will be carried out in sequence of (1) Request for capturing of execution right, (2) Writing of individual parameter, and (3) Writing to EEPROM when saving of data is required, and (4) Release of execution right. Here the hardware connection shows the case that the driver (user ID=1) is directly connected to the host with RS232C. Date is presented in hexadecimals.

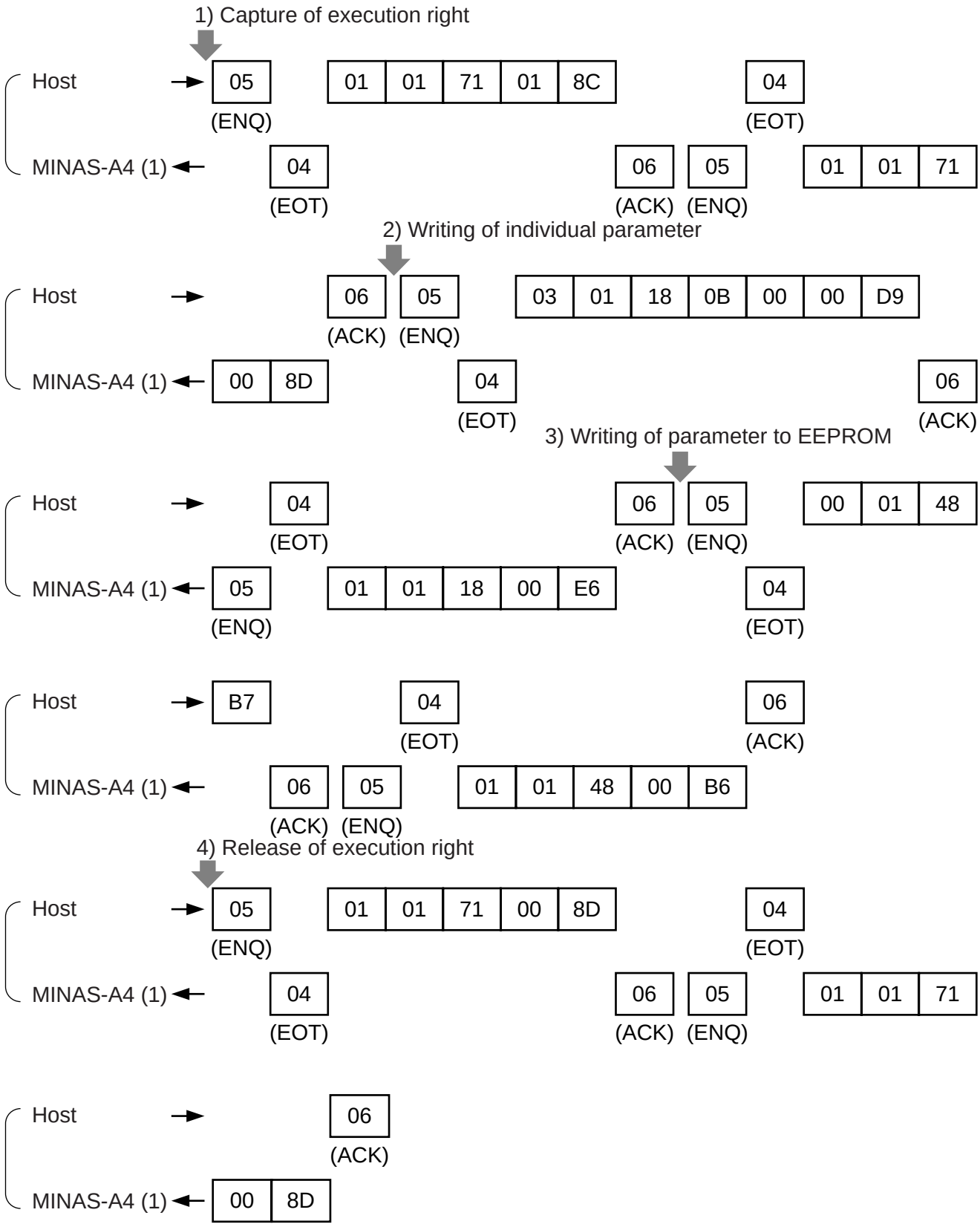

<Caution>

For details of command, refer to P.290, "Details of Communication Command".

Status Transition Chart

• RS232 Communication

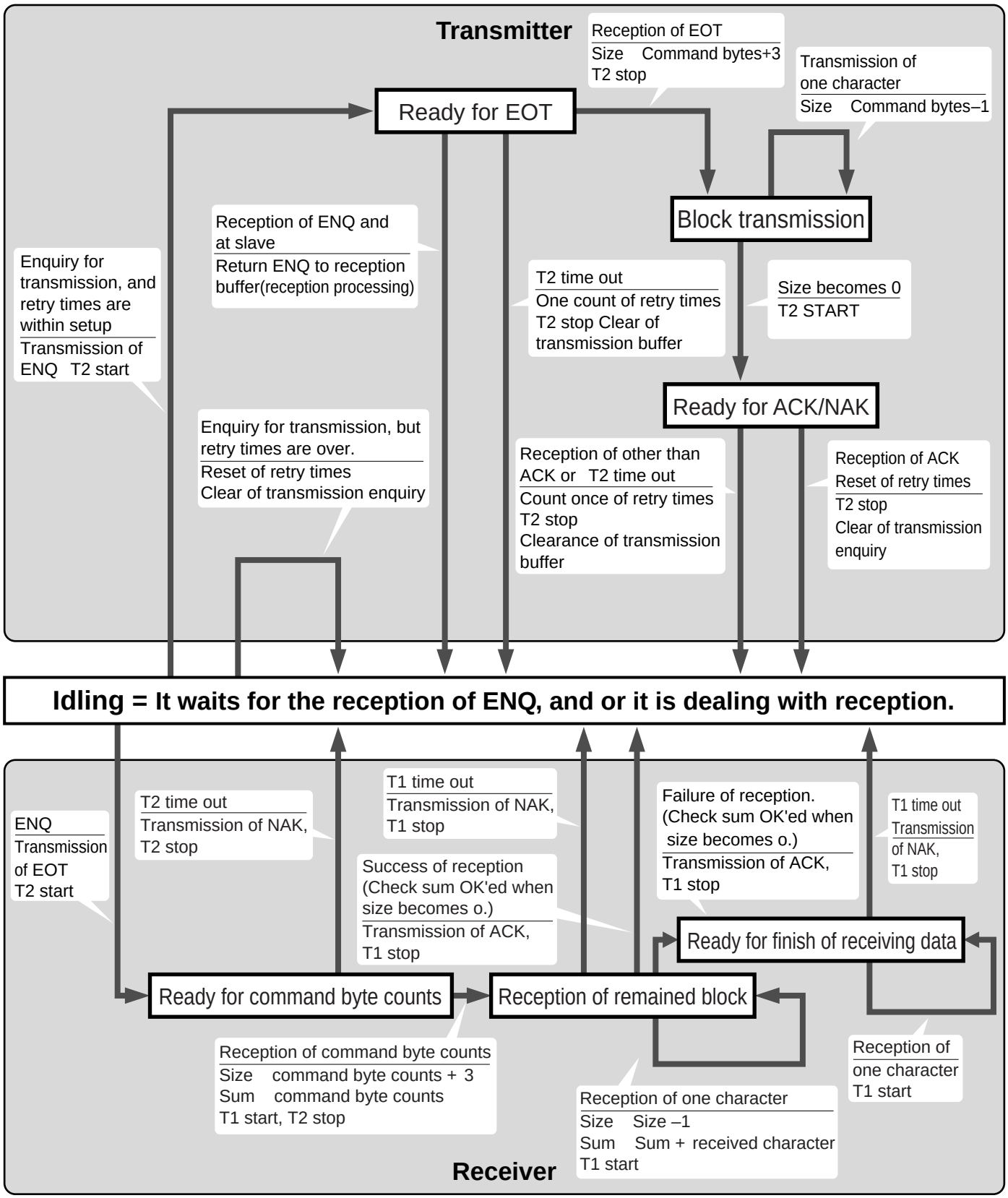

• RS485 Communication

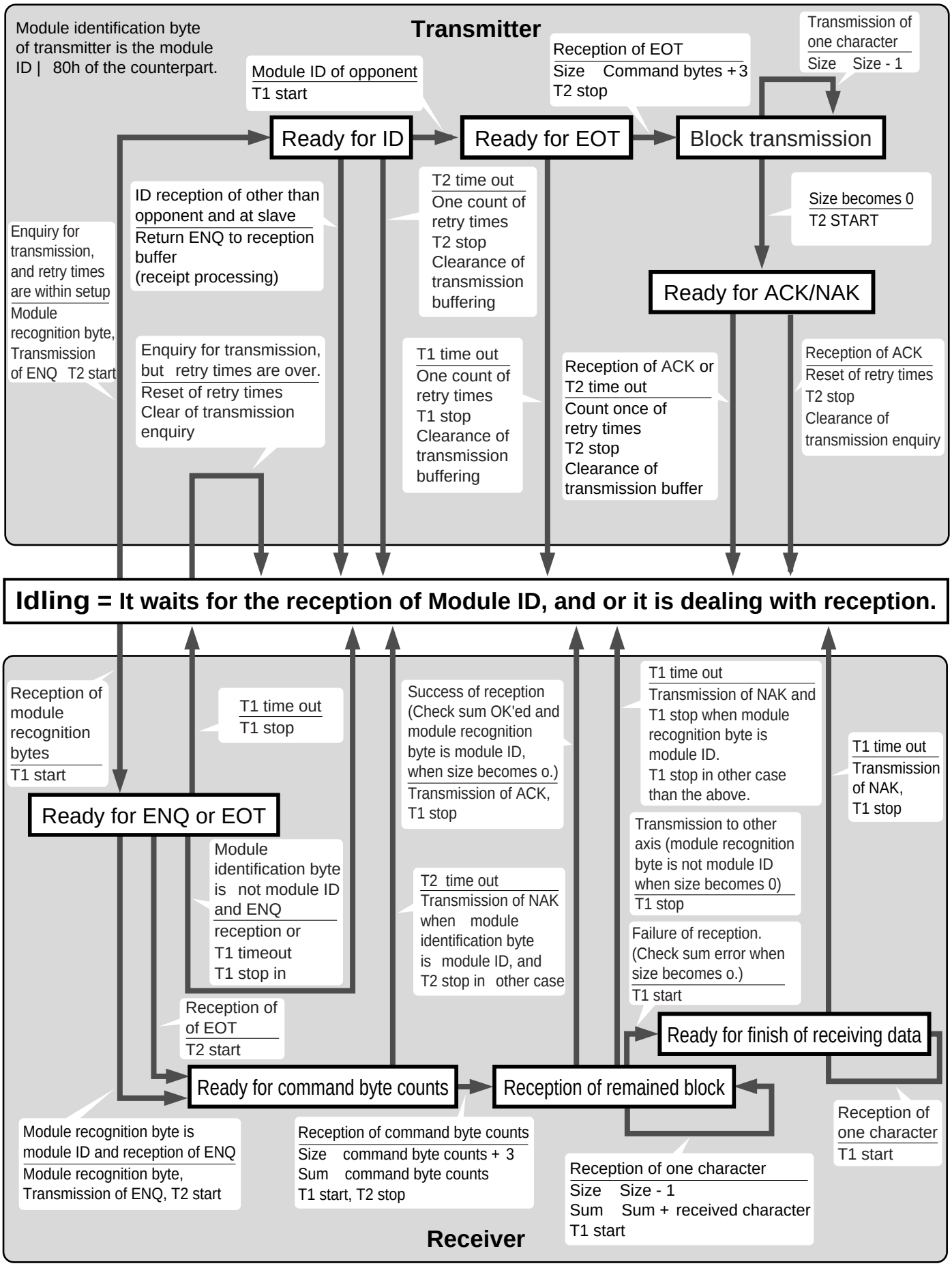

Timing of Data Communication

• In case of RS485 (RS232 to follow)

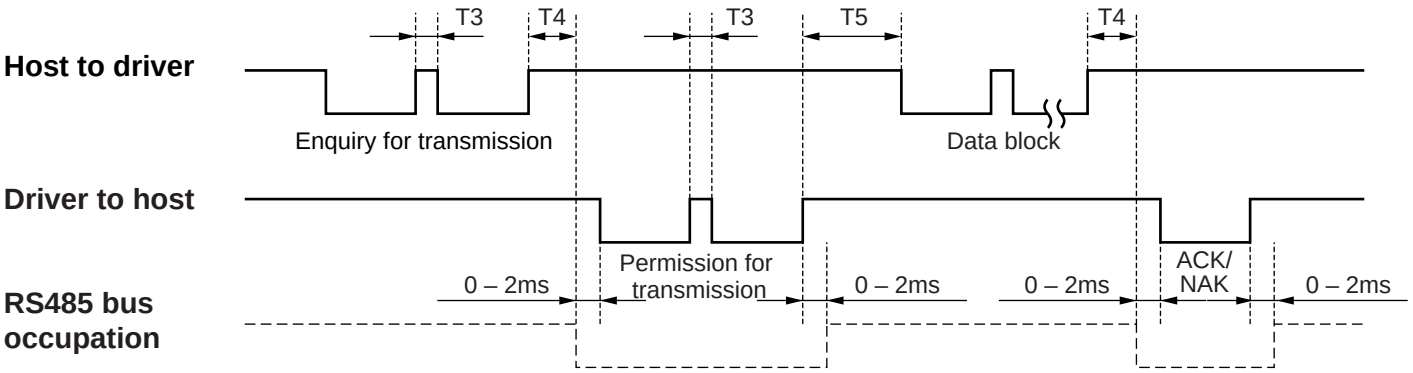

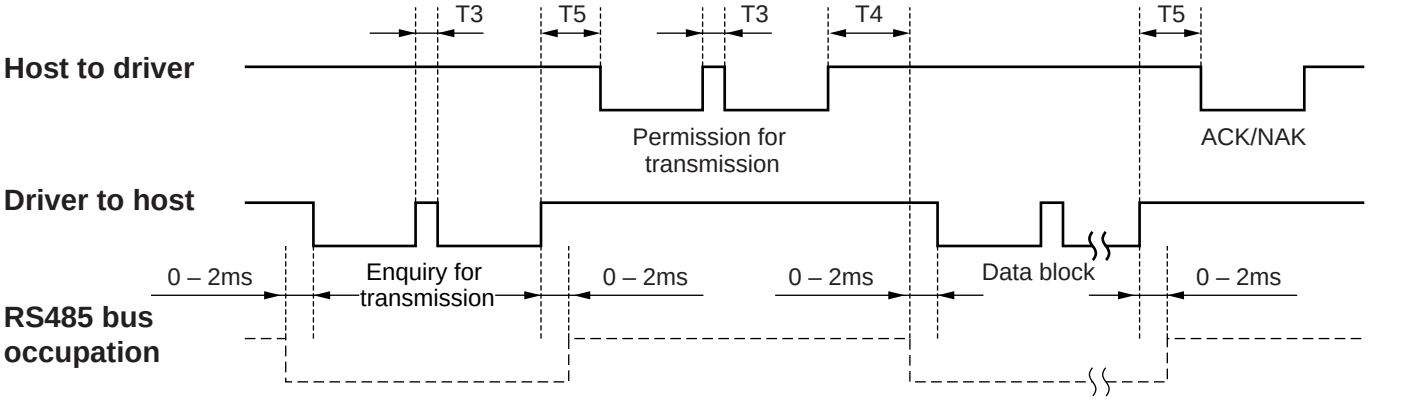

Symbol	Title	Minimum	Maximum
T3	Continuous inter-character time	Stop bit length	Protocol parameter T1
T4	Response time of driver	4ms	Protocol parameter T2
T5	Response time of host	2ms	Protocol parameter T2

<Caution>

Above time represents a period from the rising edge of the stop bit.

Communication

List of Communication Command

command	mode	Content
0		NOP
	1	Read out of CPU version
	5	Read out of driver model
	6	Read out of motor model
1		INIT
	1	Setup of RS232 protocol parameter
	2	Setup of RS485 protocol parameter
	7	Capture and release of execution right
2		POS, STATUS, I/O
	0	Read out of status
	1	Read out of command pulse counter
	2	Read out of feedback pulse counter
	4	Read out of present speed
	5	Read out of present torque output
	6	Read out of present deviation counter
	7	Read out of input signal
	8	Read out of output signal
	9	Read out of present speed, torque and deviation counter
	A	Read out of status, input signal and output signal
	C	Read out of external scale
	D	Read out of absolute encoder
	E	Read out of external scale deviation and sum of pulses
8		PARAMETER®
	0	Individual read out of parameter
	1	Individual writing of parameter
	4	Writing of parameter to EEPROM
9		ALARM
	0	Read out of present alarm data
	1	Individual read out of user alarm history
	2	Batch read out of alarm history
	3	Clear of user alarm history (in EEPROM as well)
	4	Alarm clear
	B	Absolute clear
B		PARAMETER®
	0	Individual read out of user parameter
	1	Page read out of user parameter
	2	Page writing of parameter

- Use the above commands only. If you use other commands, action of the driver cannot be guaranteed.
- When the reception data counts are not correct in the above command, transmission byte1 (Error code only) will be returned regardless of communication command.

Details of Communication Command

command	mode
0	1

• Read out of CPU Version Information

Reception data

0	
axis	
1	0
checksum	

Transmission data

3	
axis	
1	0
Version (upper)	
Version (lower)	
Error code	
checksum	

Error code

bit7	6	5	4	3	2	1	0
0 : Normal 1 : Error		Command error	RS485 error				

- Version information will be returned in upper data and lower data. (Decimal point will be returned by making the lower 4 bit of the upper data as 0.)
- Version will be displayed in figures from 0 to 9. (e.g. Version 3.1 will be upper data 30h, lower data 13h.)

command	mode
0	5

• Read out of Driver Model

Reception data

0	
axis	
5	0
checksum	

Transmission data

0Dh	
axis	
5	0
Model of ,driver (upper)	
≈	≈
Model of driver (lower)	
Error code	
checksum	

Error code

bit7	6	5	4	3	2	1	0
0 : Normal 1 : Error		Command error	RS485 error				

• Driver model consist of 12-characters, and will be transmitted in ASCII code.
(e.g.) "MADDT1503***"

command	mode
0	6

• Read out of Motor Model

Reception data

0	
axis	
6	0
checksum	

Transmission data

0Dh	
axis	
6	0
Model of ,motor (upper)	
≈	≈
Model of motor (lower)	
Error code	
checksum	

Error code

bit7	6	5	4	3	2	1	0
0 : Normal 1 : Error		Command error	RS485 error				

• Motor model consist of 12-characters, and will be transmitted in ASCII code.
(e.g.) "MSMD012S1***"

command	mode
1	1

• Setup of RS232 Protocol Parameter

Reception data

3	
axis	
1	1
T1	
T2	
M/S	RTY
checksum	

Transmission data

1	
axis	
1	1
Error code	
checksum	

Error code

bit7	6	5	4	3	2	1	0
0 : Normal 1 : Error		Command error	RS485 error	RTYerror	T2error	T1error	M/Serror

• Until this command completes, previous set up protocol parameter will be processed.
After this command has been executed, this parameter setup will be valid from the next command.
For M/S, 0 represents SLAVE and 1 represents MASTER.
• RTY is 4-bit, and M/S is 1-bit.
• Unit... T1 : 0.1s, T2 : 1s

command	mode
1	2

• Setup of RS485 Protocol Parameter

Reception data

3	
axis	
2	1
T1	
T2	
M/S	RTY
checksum	

Transmission data

1	
axis	
2	1
Error code	
checksum	

Error code

bit7	6	5	4	3	2	1	0
0 : Normal 1 : Error		Command error	RS485 error	RTYerror	T2error	T1error	M/Serror

- Until this command completes, previously set up protocol parameter will be processed.
  After this command has been executed, this parameter setup will be valid from the next command.
  For M/S, 0 represents SLAVE and 1 represents MASTER.
- RTY is 4-bit, and M/S is 1-bit.

command	mode
1	7

• Capture and Release of Execution Right

Reception data

1	
axis	
7	1
mode	
checksum	

Transmission data

1	
axis	
7	1
Error code	
checksum	

Error code

bit7	6	5	4	3	2	1	0
0 : Normal 1 : Error		Command error	RS485 error	mode error			in use

- Capture the execution right to prevent the conflict of the operation via communication and that with the front panel.
- Enquires for the capture of the execution right at parameter writing and EEPROM writing, and release the execution right after the action finishes.
- mode = 1 : Enquires for the capture of the execution right mode = 0 : Enquires for the release of the execution right
- You cannot operate with the front panel at other than monitor mode while the execution right is captured via communication.
- When the module fails to capture the execution right, it will transmit the error code of in use.

command	mode
2	0

• Readout of Status

Reception data

0	
axis	
0	2
checksum	

Transmission data

3	
axis	
0	2
control mode	
status	
error code	
checksum	

status

bit7	6	5	4	3	2	1	0
		CCW torque generating	CW torque generating	CCW running	CW running	Slower than DB permission	Torque in-limit

Error code

bit7	6	5	4	3	2	1	0
0 : Normal 1 : Error		Command error	RS485 error				

• Control modes are defined as follows.

0	Position control mode
1	Velocity control mode
2	Torque control mode
3	Full-closed control mode

• CCW/CW torque generating : This becomes 1 when torque command is positive (CCW) or negative (CW).
• CCW/CW running : This becomes 1 when motor speed (after converted to r/min) is positive (CCW or negative (CW).
• Slower than DB permission : This becomes 1 when motor speed (after converted to r/min) is below 30r/min.
• Torque in-limit : This becomes 1 when torque command is limited by analog input or parameter.

command	mode
2	1

• Read out of Command Pulse Counter

Reception data

0	
axis	
1	2
checksum	

Transmission data

5	
axis	
1	2
counter value L	
H	
error code	
checksum	

Error code

bit7	6	5	4	3	2	1	0
0 : Normal 1 : Error		Command error	RS485 error				

• Module returns the present position in absolute coordinates from the starting point. (Total sum of accumulated command pulses)
• Counter value in 32 bit.
• Counter value will be "-" for CW and "+" for CCW.

command	mode
2	2

• Read out of Feedback Pulse Counter

Reception data

0	
axis	
2	2
checksum	

Transmission data

5	
axis	
2	2
counter value L	
H	
error code	
checksum	

Error code

bit7	6	5	4	3	2	1	0
0 : Normal 1 : Error		Command error	RS485 error				

- Module returns the present position of feedback pulse counter in absolute coordinates from the staring point.
- Counter value will be "–" for CW and "+" for CCW.
- Feedback pulse counter is the total pulse counts of the encoder and represents the actual motor position traveled

command	mode
2	4

• Read out of Present Speed

Reception data

0	
axis	
4	2
checksum	

Transmission data

3	
axis	
4	2
Data (present speed) L	
H	
error code	
checksum	

Error code

bit7	6	5	4	3	2	1	0
0 : Normal 1 : Error		Command error	RS485 error				

- Reads out the present speed. (Unit : [r/min])
- Output value in 16 bit
- Speed will be "–" for CW and "+" for CCW.

command	mode
2	5

• Read out of Present Torque Output

Reception data

0	
axis	
5	2
checksum	

Transmission data

3	
axis	
5	2
Data (present torque) L	
H	
error code	
checksum	

Error code

bit7	6	5	4	3	2	1	0
0 : Normal 1 : Error		Command error	RS485 error				

- Reads out the present torque output. (Unit : Converted with "Rated motor torque = 2000)
- Output value in 16 bit
- Torque command will be "–" value for CW and "+" value for CCW.

command	mode
2	6

• Read out of Deviation Counter

Reception data

0	
axis	
6	2
checksum	

Transmission data

5	
axis	
6	2
data (deviation) L	
H	
Error code	
checksum	

Error code

bit7	6	5	4	3	2	1	0
0 : Normal 1 : Error		Command error	RS485 error				

- Reads out the present deviation counter value. (Unit : [pulse]
- Output value in 32 bit
- Becomes "+" when the encoder is located at CW direction against position command, and "–" when it is located at CCW direction.

command	mode
2	7

• Read out of Input Signal

Reception data

0	
axis	
7	2
checksum	

Transmission data

5	
axis	
7	2
data L	
data H	
Error code	
checksum	

Error code

bit7	6	5	4	3	2	1	0
0 : Normal 1 : Error		Command error	RS485 error				

Data

bit7	6	5	4	3	2	1	0
Reserved	Switching of electronic gear	Speed zero clamp	Control mode switching	CCW over-travel inhibit	CW over-travel inhibit	Alarm clear	Servo-ON

bit15	14	13	12	11	10	9	8
Reserved	Reserved	Internal speed command selection 2	Internal speed command selection 1	Reserved	Counter clear	Gain switching	Command pulse input inhibition

bit23	22	21	20	19	18	17	16
Reserved	Reserved	Torque limit switching	Internal speed command selection 3	Damping control switching	Reserved	Reserved	Reserved

bit31	31	29	28	27	26	25	24
Reserved	Reserved	Reserved	Reserved	Reserved	Reserved	Reserved	Reserved

- CW over-travel inhibit, CCW over-travel inhibit, speed zero clam and command pulse input inhibit become 1 when opened.
  Other input signals are 0 when opened.

command	mode
2	8

• Read out of Deviation Counter

Reception data

0	
axis	
8	2
checksum	

Transmission data

7	
axis	
8	2
data L	
data H	
alarm data L	
H	
error code	
checksum	

alarm data

bit8 External scale
bit7 Over-load
bit6 Fan lock
bit5 Over-regeneration
bit0 Battery

error code

bit7	6	5	4	3	2	1	0
0 : Normal 1 : Error		Command error	RS485 error				

Data

bit7	6	5	4	3	2	1	0
Reserved	In-speed	Torque in-limit	Zero speed selection	Release of mechanical brake	Positioning complete (In-position)	Servo-Alarm	Servo-Ready

bit15	14	13	12	11	10	9	8
Reserved	Reserved	Dynamic brake engagement	Reserved	Reserved	Full-closed positioning complete	At-speed	Reserved

bit23	22	21	20	19	18	17	16
Reserved	Reserved	Reserved	Reserved	Reserved	Reserved	Reserved	Reserved

bit31	31	29	28	27	26	25	24
Reserved	Reserved	Reserved	Reserved	Reserved	Reserved	Reserved	Reserved

• The table below shows the relation of the signals and actions.

Signal title	0	1
Servo-Ready	Servo-Not Ready	At Servo-Ready
Servo-Alarm	Normal	At Servo-Alarm
Positioning completed	Positioning not completed	Positioning in-complete
Release of mechanical brake	Mechanical brake engaged	Mechanical brake released
Zero speed detection	Zero speed not detected	Zero speed detected
Torque in-limit	Torque not in-limit	Torque in-limit
At-speed (Speed arrival)	Not at-speed(Speed not arrived)	Speed arriving
In-speed (Speed coincidence)	Not in-speed(Speed not coincided)	In-speed (Speed coincided)
Full-closed positioning complete	Full-closed positioning not completed	Full-closed positioning completed
Dynamic brake engagement	Dynamic brake released	Dynamic brake engaged

command	mode
2	9

• Read out of Present Speed, Torque and Deviation Counter

Reception data

0	
axis	
9	2
checksum	

Transmission data

9	
axis	
9	2
data L	
(speed) H	
data L	
(torque) H	
data L	
(deviation) H	
error code	
checksum	

Error cod

bit7	6	5	4	3	2	1	0
0 : Normal 1 : Error		Command error	RS485 error				

- Output value of speed and torque are in 16 bit and deviation in 32 bit.
- Unit and sign of the output data is as same as that of command No. 24 (command = 2, mode = 4), 25 (mode = 5) and 26 (mode = 6).

command	mode
2	A

• Read out of Status, Input Signal and Output Signal

Reception data

0	
axis	
A	2
checksum	

Transmission data

0Dh	
axis	
A	2
control mode	
status	
input signal L	
input signal H	
output signal L	
output signal H	
alarm data L	
alarm data H	
error code	
checksum	

Error cod

bit7	6	5	4	3	2	1	0
0 : Normal 1 : Error		Command error	RS485 error				

- Meaning of each bit of control mode, status, input signal, output signal and alarm data is as same as that of command No. 20 (command = 2, mode = 0), 27 (mode = 7) and 28 (mode = 8).

command	mode
2	C

• Read out of External Scale

Reception data

0	
axis	
C	2
checksum	

Transmission data

0Bh	
axis	
C	2
encoder ID (L)	
(H)	
status (L)	
(H)	
(L)	
absolute position data (48bit)	
(H)	
error code	
checksum	

Encoder ID

	Encoder ID (L)	Encoder ID (H)
ST771	Address "0" data of EEPROM	32h
AT500series	Address "0" data of EEPROM	31h

• Command error occurs at other control modes than full-closed control.

• ST771

Status (L)

bit7	6	5	4	3	2	1	0
Thermal alarm	Signal intensity alarm	Signal intensity error	Transducer error	ABS detection error	Hardware error	Initialization error	Over speed

Status (H)

bit7	6	5	4	3	2	1	0
0	0	Encoder error *1	Encoder error *2	0	0	0	0

*1 bit5 : Logical sum of bit0 to bit 5 of status (L) *2 bit4 : logical sum of bit6 and bit 7 of status (L)

• AT500 series

Status (L)

bit7	6	5	4	3	2	1	0
Thermal alarm	0	Communication error	CPU, memory error	Capacity and photoelectric error	Encoder non-matching error	Initialization error	Over speed

Status (H)

bit7	6	5	4	3	2	1	0
0	0	Encoder error *3	Encoder alarm *4	0	0	0	0

*3 bit5 : Logical sum of bit0 to bit 5 of status (L) *4 bit4 : logical sum of bit6 and bit 7 of status (L)

Error code

bit7	6	5	4	3	2	1	0
0 : Normal 1 : Error		Command error	RS485 error				

• Absolute position data = 48bit (0 x 800000000000 to 0 x 7FFFFFFFFFFFh)

command	mode
2	D

• Read out of Absolute Encoder

Reception data

0	
axis	
D	2
checksum	

Transmission data

0Bh	
axis	
D	2
encoder ID (L)	
(H)	
status (L)	
(H)	
(L)	
single-turn data	
(H)	
multi-turn data (L)	
(H)	
0	
Error code	
checksum	

	Encoder ID (L)	Encoder ID (H)
17bit absolute	3	11h

Status (L)

bit7	6	5	4	3	2	1	0
Battery alarm	System down	Multi-turn error	0	Counter overflow	Count error	Full absolute status	Over speed

Status (H)

- bit4 : System down
- bit5 : Battery alarm, multi-turn error, counter overflow, count error, full absolute status and logical sum of over speed

Error code

bit7	6	5	4	3	2	1	0
0 : Normal 1 : Error		Command error	RS485 error				

- Command error will occur when you use the above encoder or absolute encoder as an incremental encoder.
- Single turn data = 17bit (000000h to 01FFFFh)
- Multi-turn data = 16bit (0000h to FFFFh)

command	mode
2	E

• Read out of External Scale Accumulation and Deviation

Reception data

0	
axis	
E	2
checksum	

Transmission data

9	
axis	
E	2
(L)	
external scale	
FB pulse sum	
(H)	
(L)	
external scale deviation	
(H)	
error code	
checksum	

Error code

bit7	6	5	4	3	2	1	0
0 : Normal 1 : Error		Command error	RS485 error				

- External scale FB pulse sum will return the present position of the external scale counter in absolute coordinates from the starting point.
- External scale FB pulse sum will be "-" for CW and "+" for CCW.
- External scale deviation becomes "+" when the external scale is positioned at CW direction against position command, and "–" when it is positioned at CCW direction.

command	mode
8	0

• Individual Read out of Parameter

Reception data

1	
axis	
0	8
parameter No.	
checksum	

Transmission data

3	
axis	
0	8
parameter value L	
H	
error code	
checksum	

Error code

bit7	6	5	4	3	2	1	0
0 : Normal 1 : Error		Command error	RS485 error	No.Error			

• If the parameter No. is not within the range of 0 x 00 to 0 x 7F, No. error will be returned.

command	mode
8	1

• Individual Writing of Parameter

Reception data

3	
axis	
1	8
parameter No.	
parameter value L	
H	
checksum	

Transmission data

1	
axis	
1	8
error code	
checksum	

Error code

bit7	6	5	4	3	2	1	0
0 : Normal 1 : Error	Data Error	Command error	RS485 error	No.Error			

• If the parameter No. is not within the range of 0 x 00 to 0 x 7F, No. error will be returned.
• This command change parameters only temporarily. If you want to write into EEPROM, execute the parameter writing to EEPROM (mode = 4).
• Set up parameters not in use to 0 without fail, or it leads to data error. Data error also occurs when the parameter value exceeds the setup range.

command	mode
8	4

• Writing of Parameters to EEPROM

Reception data

0	
axis	
4	8
checksum	

Transmission data

1	
axis	
4	8
error code	
checksum	

Error code

bit7	6	5	4	3	2	1	0
0 : Normal 1 : Error	Data Error	Command error	RS485 error			Control LV	

• Writes the preset parameters to EEPROM.
• Transmission data will be returned after EEPROM writing completes. It may take max. 5sec for EEPROM writing (when all parameters have been changed.)
• Data error will occur when writing fails.
• When under-voltage occurs, error code of control LV will be returned instead of executing writing.

command	mode
9	0

• Read out of Present Alarm Data

Reception data

0	
axis	
0	9
checksum	

Transmission data

2	
axis	
0	9
alarm No.	
error code	
checksum	

Error code

bit7	6	5	4	3	2	1	0
0 : Normal 1 : Error		Command error	RS485 error				

• If no alarm occurs, alarm No. becomes 0.
(For alarm No., refer to P.252, "Protective function (What is alarm code ?)" of When in Trouble.

command	mode
9	1

• Individual Read out of Alarm History

Reception data

1	
axis	
1	9
history No.	
checksum	

Transmission data

3	
axis	
1	9
history No.	
alarm No.	
error code	
checksum	

Error code

bit7	6	5	4	3	2	1	0
0 : Normal 1 : Error		Command error	Command error	No.Error			

• History No. 1 to 14 represents latest to 14th latest error event.
• No. error will occur when you enter other value than 1 to 14.

command	mode
9	2

• Batch Read out of Alarm History

Reception data

0	
axis	
2	9
checksum	

Transmission data

0Fh	
axis	
2	9
1st. latest	alarm No.
2nd. latest	alarm No.
	–
14th. latest	alarm No.
	Error code
	checksum

Error code

bit7	6	5	4	3	2	1	0
0 : Normal 1 : Error		Command error	Command error				

• You can read out last 14 error events.

command	mode
9	3

• Alarm History Clear

Reception data

0	
axis	
3	9
checksum	

Transmission data

1	
axis	
3	9
Error code	
checksum	

Error code

bit7	6	5	4	3	2	1	0
0 : Normal 1 : Error	Data Error	Command error	RS485 error			Control LV	

- Clears the alarm data history.
- Data error will occur when you fail to clear.
- When under-voltage of control power supply occurs, error code of control LV will be returned instead of executing writing.

command	mode
9	3

• Alarm Clear

Reception data

0	
axis	
4	9
checksum	

Transmission data

1	
axis	
4	9
Error code	
checksum	

Error code

bit7	6	5	4	3	2	1	0
0 : Normal 1 : Error		Command error	RS485 error				

- Clears the present alarm. (only those you can clear)

command	mode
9	B

• Absolute Clear

Reception data

0	
axis	
B	9
checksum	

Transmission data

1	
axis	
B	9
Error code	
checksum	

Error code

bit7	6	5	4	3	2	1	0
0 : Normal 1 : Error		Command error	RS485 error				

- Clears absolute encoder error and multi-turn data
- Command error will be returned when you use other encoder than 17bit absolute encoder.

command	mode
B	0

• Individual Read out of User Parameter

Reception data

1	
axis	
0	B
parameter No.	
checksum	

Transmission data

9	
axis	
0	B
parameter value L	
H	
MIN. value L	
H	
MAX. value L	
H	
Property L	
H	
Error code	
checksum	

Property

bit7	6	5	4	3	2	1	0
Parameter not in use	Display inhibited	(for special customer)	Change at initialization	System related			

bit15	14	13	12	11	10	9	8
							Read only

Error code

bit7	6	5	4	3	2	1	0
0 : Normal 1 : Error		Command error	RS485 error	No.Error			

• If the parameter No. is not within the range of 0 x 00 to 0 x 7F, No. error will be returned.

command	mode
B	1

• Page Read out of User Parameter

Reception data

1	
axis	
1	B
page No.	
checksum	

Transmission data

82h	
axis	
1	B
page No.	
parameter value L	
(No. 0) H	
MIN. value L	
(No. 0) H	
MAX. value L	
(No. 0) H	
Property L	
(No. 0) H	
≈	
parameter value L	
(No.0fh) H	
MIN. value L	
(No.0fh) H	
MAX. value L	
(No.0fh) H	
Property L	
(No.0fh) H	
error code	
checksum	

Property

bit7	6	5	4	3	2	1	0
Parameter not in use	Display inhibited	(for special customer)	Change at initialization	System related			

bit15	14	13	12	11	10	9	8
							Read only

Error code

bit7	6	5	4	3	2	1	0
0 : Normal 1 : Error		Command error	RS485 error	No.Error			

• Designate 0 to 7 to page No. and read out 16 parameters from each specified page.
• No. error will be returned when other No. than 0 to 7 is entered to page No.

command	mode
B	2

• Page Writing of User Parameter

Reception data

21h	
axis	
2	B
page No.	
parameter L	
(value of No. 0)	H
parameter value L	
(value of No. 1)	H
–	
parameter value L	
(value of No. 0th)	H
checksum	

Transmission data

2	
axis	
2	B
page No.	
Error code	
checksum	

Error code

bit7	6	5	4	3	2	1	0
0 : Normal 1 : Error	Data Error	Command error	RS485 error	No.Error			

- Designate 0 to 7 to page No. and write 16 parameters from each specified page.
- Set up o to parameters not in use without fail, or data error will occur. Data error will also occurs when data exceeding the setup range is transmitted.
- No. error will be returned when other No. than 0 to 7 is entered to page No.

MEMO

Division Ratio for Parameters

Relation between Electronic Gear and Position Resolution or Traveling Speed

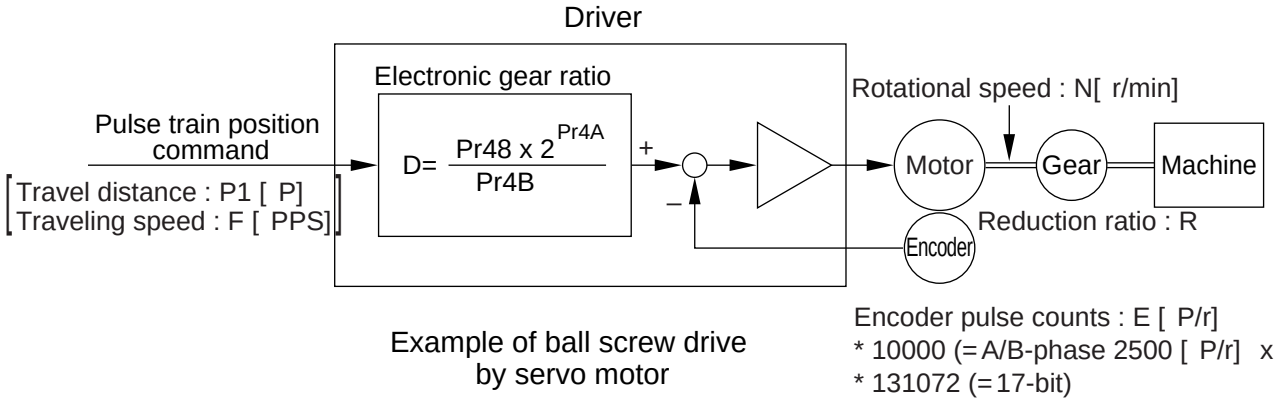

Example of ball screw drive by servo motor

Encoder pulse counts : E [P/r]
* 10000 (= A/B-phase 2500 [P/r] x 4)
* 131072 (= 17-bit)

Here we take a ball screw drive as an example of machine.
A travel distance of a ball screw M [mm] corresponding to travel command P1 [P] , can be described by the following formula (1) by making the lead of ball screw as L [mm]

$M = P1 \times (D/E) \times (1/R) \times L$ ..... (1)

therefore, position resolution (travel distance ΔM per one command pulse) will be described by the formula (2)

$\Delta M = (D/E) \times (1/R) \times L$ ..... (2)

modifying the above formula (2), electronic gear ratio can be found in the formula (3).

$D = (\Delta M \times E \times R) \times L$ ..... (3)

Actual traveling velocity of ball screw, V[mm/s] can be described by the formula (4) and the motor rotational speed, N at that time can be described by the formula (5).

$V = F \times (D/E) \times (1/R) \times L$ ..... (4)

$N = F \times (D/E) \times 60$ ..... (5)

modifying the above formula (5), electronic gear ratio can be found in the formula (6).

$D = (N \times E)/ (F \times 60)$ ..... (6)

<Notes>

1) Make a position resolution, ΔM as approx. 1/5 to 1/10 of the machine positioning accuracy, $\Delta\varepsilon$, considering a mechanical error.
2) Set up Pr48 and Pr4B to any values between 1 to 10000.
3) You can set up any values to a numerator and denominator, however, action by an extreme division ratio or multiplication ratio cannot be guaranteed. Recommended range is 1/50 to 20 times.
4)

2^n	Decimal
2^0	1
2^1	2
2^2	4
2^3	8
2^4	16
2^5	32
2^6	64
2^7	128
2^8	256
2^9	512
2^{10}	1024
2^{11}	2048
2^{12}	4096
2^{13}	8192
2^{14}	16384
2^{15}	32768
2^{16}	65536
2^{17}	131072

	Electronic gear ratio $D = \frac{\Delta M \times E \times R}{L}$	$D = \frac{Pr48 \times 2^{Pr4A}}{Pr4B}$
Lead of ball screw, L = 10mm Gear reduction ratio, R = 1 Position resolution, ΔM = 0.005mm Encoder, 2500P/r (E= 10000P/r)	$\frac{0.005 \times 10000 \times 1}{10} = 5$ $\quad \frac{10000 \times 2^{\circ}}{2000}$	Pr48 = 10000 Pr4A = 0 Pr4B = 2000
Lead of ball screw, L = 20mm Gear reduction ratio, R = 1 Position resolution, ΔM = 0.0005mm Encoder, 2500P/r (E= 10000P/r)	$\frac{0.0005 \times 10000 \times 1}{20} = 0.25$ D < 1, hence use 17-bit.	"D = 1" is the condition for minimum resolution.
Encoder : 17-bit (E = 2^{17} P/r)	$\frac{0.0005 \times 2^{17} \times 1}{20}$ $= \frac{1 \times 2^{17}}{40000} = \frac{1 \times \cancel{2^{2}} \times 2^{15}}{\cancel{2^{2}} \times 10000}$	Pr48 = 1 Pr4A = 15 Pr4B = 10000

	Motor rotational speed (r/min), $N = F \times \frac{D}{E} \times 60$	
Lead of ball screw, L = 10mm Gear reduction ratio, R = 1 Position resolution, ΔM = 0.0005mm Line driver pulse input, 500kpps Encoder, 17-bit	$\cancel{500000} \times \frac{1 \times 2^{15}}{\cancel{10000}} \times \frac{1}{\cancel{2}^{17}} \times 60$ $= 50 \times 60 \times \frac{1}{2^{2}} = 750$	
Ditto To make it to 2000r/min.	Electronic gear ratio $D = \frac{N \times E}{F \times 60}$	$D = \frac{Pr48 \times 2P^{Pr4A}}{Pr4B}$
	$D = \frac{2000 \times 2^{17}}{500000 \times 60} = \frac{2^{1} \times 1000 \times 2^{17}}{3000\cancel{0000}}$ $= \frac{1 \times \cancel{2}^{3} \times 2^{15}}{\cancel{2}^{3} \times 3750} = \frac{1 \times 2^{15}}{3750}$	Pr48= 1 Pr4A= 15 Pr4B= 3750
	Travel distance per command pulse (mm) (Position resolution) $\Delta M = \frac{D}{E} \times \frac{1}{R} \times L$	
	$\frac{2^{15}}{3750} \times \frac{1}{2^{17}} \times \frac{1}{1} \times 20 = \frac{1}{3750} \times \frac{20}{2^{2}} = \frac{20}{3750 \times 4} = 0.00133mm$	

Conformity to EC Directives and UL Standards

EC Directives

The EC Directives apply to all such electronic products as those having specific functions and have been exported to EU and directly sold to general consumers. Those products are required to conform to the EU unified standards and to furnish the CE marking on the products.
However, our AC servos meet the relevant EC Directives for Low Voltage Equipment so that the machine or equipment comprising our AC servos can meet EC Directives.

EMC Directives

MINAS Servo System conforms to relevant standard under EMC Directives setting up certain model (condition) with certain locating distance and wiring of the servo motor and the driver. And actual working condition often differs from this model condition especially in wiring and grounding. Therefore, in order for the machine to conform to the EMC Directives, especially for noise emission and noise terminal voltage, it is necessary to examine the machine incorporating our servos.

Conformed Standards

Subject	Conformed Standard		
Motor	IEC60034-1 IEC60034-5 UL1004 CSA22.2 No.100		Conforms to Low-Voltage Directives
Motor/ Motor and driver	EN50178 UL508C		
	EN55011	Radio Disturbance Characteristics of Industrial, Scientific and Medical (ISM) Radio-Frequency Equipment	Standards referenced by EMC Directives
	EN61000-6-2	Immunity for Industrial Environments	
	IEC61000-4-2	Electrostatic Discharge Immunity Test	
	IEC61000-4-3	Radio Frequency Electromagnetic Field Immunity Test	
	IEC61000-4-4	Electric High-Speed Transition Phenomenon/Burst Immunity Test	
	IEC61000-4-5	Lightening Surge Immunity Test	
	IEC61000-4-6	High Frequency Conduction Immunity Test	
	IEC61000-4-11	Instantaneous Outage Immunity Test	

IEC : International Electrotechnical Commission
EN : Europaischen Normen
EMC : Electromagnetic Compatibility
UL : Underwriters Laboratories
CSA : Canadian Standards Association

<Precautions in using options>
Use options correctly after reading operation manuals of the options to better understand the precautions. Take care not to apply excessive stress to each optional part.

Peripheral Equipments

Installation Environment

Use the servo driver in the environment of Pollution Degree 1 or 2 prescribed in IEC-60664-1 (e.g. Install the driver in control panel with IP54 protection structure.)

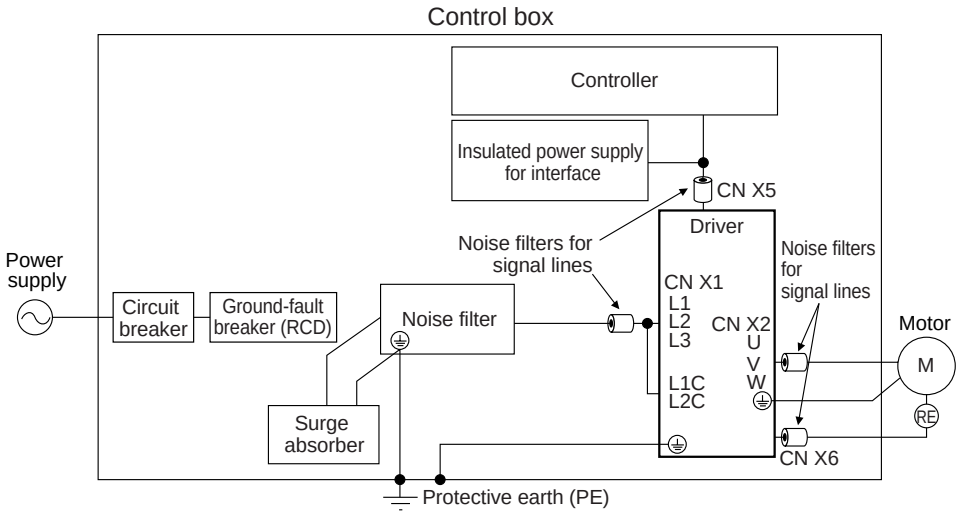

Power Supply

100V type : Single phase, (A, B and C-frame)	100V	+10% –15%	to	115V	+10% –15%	50/60Hz
200V type : Single phase, (B, C-frame)	200V	+10% –15%	to	240V	+10% –15%	50/60Hz
200V type : Single/3-phase, (C, D-frame)	200V	+10% –15%	to	240V	+10% –15%	50/60Hz
200V type : 3-phase, (E, F-frame)	200V	+10% –15%	to	230V	+10% –15%	50/60Hz

(1) This product is designed to be used at over-voltage category (Installation category) II of EN 50178:1997. If you want to use this product un over-voltage category (Installation category) III, install a surge absorber which complies with EN61634-11:2002 or other relevant standards at the power input portion.
(2) Use an insulated power supply of DC12 to 24V which has CE marking or complies with EN60950

Circuit Breaker

Install a circuit breaker which complies with IEC Standards and UL recognizes (Listed and Ⓤ marked) between power supply and noise filter.

Noise Filter

When you install one noise filter at the power supply for multi-axes application, contact to a manufacture of the noise filter.

Option part No.	Voltage specifications for driver	Manufacturer' s part No.	Applicable driver (frame)	Manufacturer
DV0P4170	Single phase 100V/200V	SUP-EK5-ER-6	A and B-frame	Okaya Electric Ind.

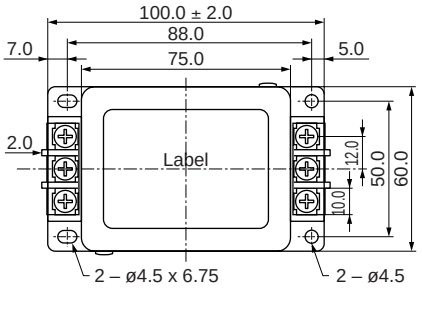

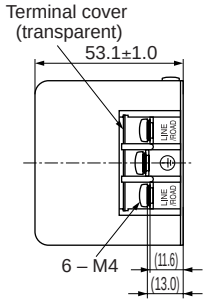

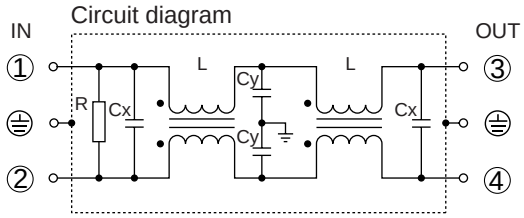

Option part No.	Voltage specifications for driver	Manufacturer' s part No.	Applicable driver (frame)	Manufacturer
DV0P4180	3-phase 200V	3SUP-HQ10-ER-6	C-frame	Okaya Electric Ind.
DV0P4220		3SUP-HU30-ER-6	D and E-frame	

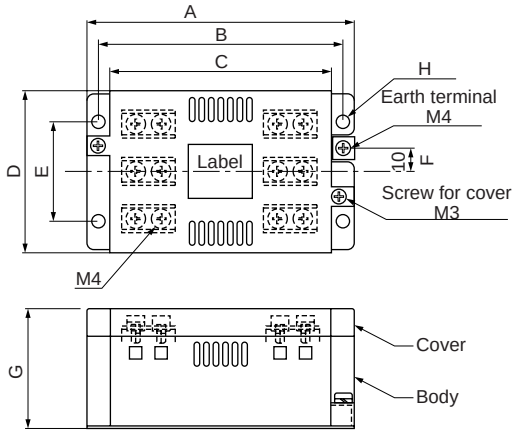

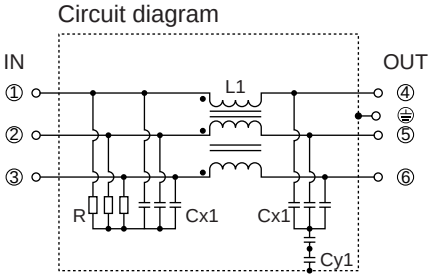

	A	B	C	D	E	F	G	H	K	L
DV0P4180	115	105	95	70	43	10	52	5.5	M4	M4
DV0P4220	145	135	125	70	50	10	52	5.5	M4	M4

Conformity to EC Directives and UL Standards

Option part No.	Voltage specifications for driver	Manufacturer' s part No.	Applicable driver (frame)	Manufacturer
DV0P3410	3-phase 200V	3SUP-HL50-ER-6B	F-frame	Okaya Electric Ind.

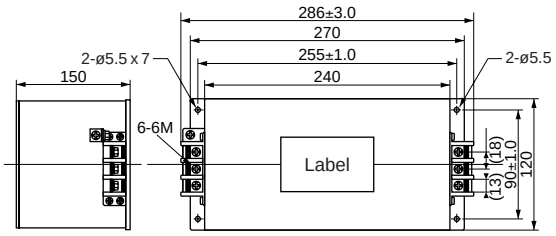

Circuit diagram

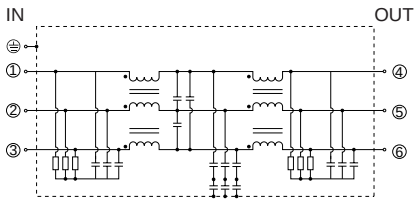

Surge Absorber

Provide a surge absorber for the primary side of noise filter.

Option part No.	Voltage specifications for driver	Manufacturer' s part No.	Manufacturer
DV0P1450	3-phase 200V	R . A .V-781BXZ-4	Okaya Electric Ind.

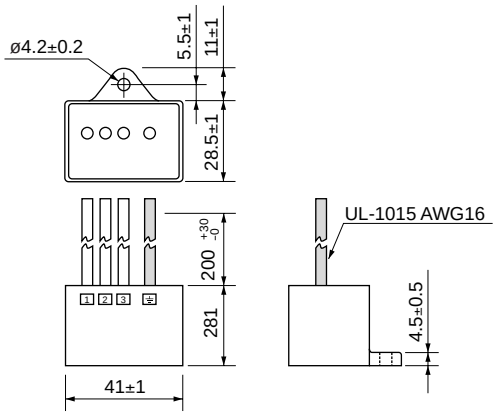

Circuit diagram

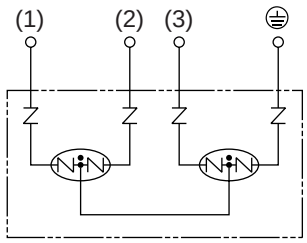

Option part No.	Voltage specifications for driver	Manufacturer' s part No.	Manufacturer
DV0P4190	Single phase 100/200V	R . A .V-781BWZ-4	Okaya Electric Ind.

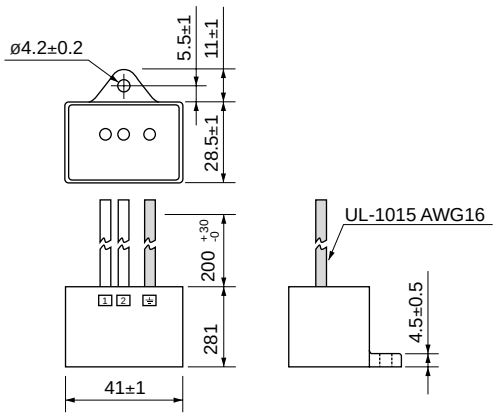

Circuit diagram

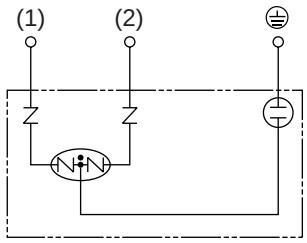

<Remarks>

Take off the surge absorber when you execute a dielectric test to the machine or equipment, or it may damage the surge absorber.

Noise Filter for Signal Lines *

Install noise filters for signal lines to all cables (power cable, motor cable, encoder cable and interface cable)
* In case of D-frame, install 3 noise filters at power line.

Option part No.	Manufacturer' s part No.	Manufacturer
DV0P1460	ZCAT3035-1330	TDK Corp.

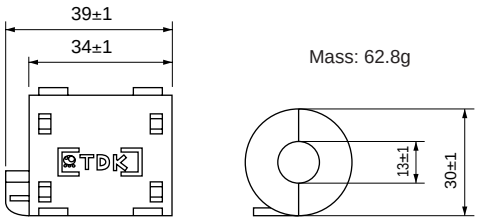

<Caution>
Fix the signal line noise filter in place to eliminate excessive stress to the cables.

Grounding

(1) Connect the protective earth terminal (⏚) of the driver and the protective earth terminal (PE) of the control box without fail to prevent electrical shocks.
(2) Do not make a joint connection to the protective earth terminals (⏚). 2 terminals are provided for protective earth.

Ground-Fault Breaker

Install a type B ground fault breaker (RCD) at primary side of the power supply.

<Note>
For driver and applicable peripheral equipments, refer to P.32 "Driver and List of Applicable Peripheral Equipments" of Preparation.

Driver and List of Applicable Peripheral Equipments (EC Directives)

Refer to P.28 to 41, "System Configuration and Wiring"

Conformity to UL Standards

Observe the following conditions of (1) and (2) to make the system conform to UL508C (File No. E164620).
(1) Use the driver in an environment of Pollution Degree 2 or 1 prescribed in IEC60664-1. (e.g. Install in the control box with IP54 enclosure.)
(2) Install a circuit breaker or fuse which are UL recognized (LISTED Ⓤ marked) between the power supply and the noise filter without fail.
For the rated current of the circuit breaker or fuse, refer to P.32, "Driver and List of Applicable Peripheral Equipments" of Preparation.
Use a copper cable with temperature rating of 60˚C or higher.
Tightening torque of more than the max. values (M4:1.2N·m, M5: 2.0N·m) may break the terminal block.
(3) Over-load protection level
Over-load protective function will be activated when the effective current exceeds 115% or more than the rated current based on the time characteristics. Confirm that the effective current of the driver does not exceed the rated current. Set up the peak permissible current with Pr5E (Setup of 1st torque limit) and Pr5F (Setup 2nd torque limit).

Options

Specifications of for Motor Connector

• Pin disposition for encoder connector

MSMA
MDMA
MFMA
MHMA
MGMA

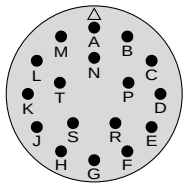

N/MS3102A20-29P

• Specifications of 2500P/r incremental encoder

Pin No.	Content	Pin No.	Content
A	NC	K	PS
B	NC	L	$\overline{PS}$
C	NC	M	NC
D	NC	N	NC
E	NC	P	NC
F	NC	R	NC
G	EOV	S	NC
H	E5V	T	NC
J	Frame GND		

MSMA
MDMA
MFMA
MHMA
MGMA

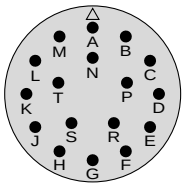

N/MS3102A20-29P

• Specifications of 17bit absolute/incremental encoder

Pin No.	Content	Pin No.	Content
A	NC	K	PS
B	NC	L	$\overline{PS}$
C	NC	M	NC
D	NC	N	NC
E	NC	P	NC
F	NC	R	NC
G	EOV	S	BAT–*
H	E5V	T	BAT+*
J	Frame GND		

*Connection to Pin-S and T are not required when used in incremental.

• Pin disposition for motor/brake connector (with brake)

MSMA 1kW, 1.5kW, 2kW
MDMA 1kW, 1.5kW, 2kW
MFMA 400W, 1.5kW
MHMA 500W, 1kW, 1.5kW
MGMA 900W

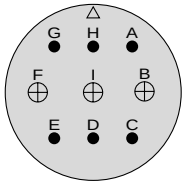

JL04V-2E20-18PE-B-R
(by Japan Aviation Electronics or equivalent)

Pin No.	Content
G	Brake
H	Brake
A	NC
F	U-phase
I	V-phase
B	W-phase
E	Earth
D	Earth
C	NC

MSMA 3kW, 4kW, 5kW
MDMA 3kW, 4kW, 5kW
MFMA 2.5kW, 4.5kW
MHMA 2kW,3kW,4kW,5kW
MGMA 2kW, 3kW, 4.5kW

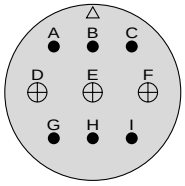

JL04V-2E24-11PE-B-R
(by Japan Aviation Electronics or equivalent)

Pin No.	Content
A	Brake
B	Brake
C	NC
D	U-phase
E	V-phase
F	W-phase
G	Earth
H	Earth
I	NC

• Pin disposition for motor/brake connector (without brake)

MSMA 1kW, 1.5kW, 2kW
MDMA 1kW, 1.5kW, 2kW
MHMA 500W, 1kW, 1.5kW
MGMA 900W

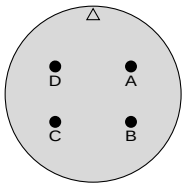

JL04V-2E20-4PE-B-R
(by Japan Aviation Electronics or equivalent)

PIN No.	Content
A	U-phase
B	V-phase
C	W-phase
D	Earth

MSMA 3kW, 4kW, 5kW
MDMA 3kW, 4kW, 5kW
MHMA 2kW,3kW,4kW,5kW
MGMA 2kW, 3kW, 4.5kW

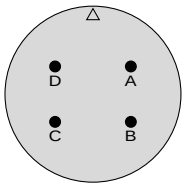

JL04V-2E22-22PE-B-R
(by Japan Aviation Electronics or equivalent)

PIN No.	Content
A	U-phase
B	V-phase
C	W-phase
D	Earth

MFMA 400W, 1.5kW

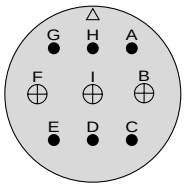

JL04V-2E20-18PE-B-R
(by Japan Aviation Electronics or equivalent)

PIN No.	Content
G	NC
H	NC
A	NC
F	U-phase
I	V-phase
B	W-phase
E	Earth
D	Earth
C	NC

MFMA 2.5kW, 4.5kW

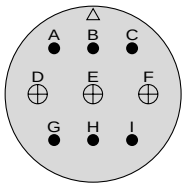

JL04V-2E24-11PE-B-R
(by Japan Aviation Electronics or equivalent)

PIN No.	Content
A	NC
B	NC
C	NC
D	U-phase
E	V-phase
F	W-phase
G	Earth
H	Earth
I	NC

Do not connect anything to NC pins.

Table for junction cable by model of MINAS A4 series

Motor type	Type of junction cable			Part No of junction cable	Fig.No.
MAMA 100W to 750W	Encoder	17bit, 7-wire	With battery holder for absolute encoder	MFECA0**0EAE	Fig.2-1
MSMD 50W to 750W			Without battery holder for absolute encoder	MFECA0**0EAD	Fig.2-2
MQMA 100W to 400W		2500P/r, 5-wire		MFECA0**0EAM	Fig.2-3
	Motor			MFMCA0**0EED	Fig.3-1
	Brake			MFMCB0**0GET	Fig.5-1
MSMA 1.0kW, 1.5kW	Encoder	17bit, 7-wire	With battery holder for absolute encoder	MFECA0**0ESE	Fig.2-4
MDMA 1.0kW, 1.5kW			Without battery holder for absolute encoder	MFECA0**0ESD	Fig.2-5
MHMA 0.5kW to 1.5kW		2500P/r, 5-wire		MFECA0**0ESD	Fig.2-5
MGMA 900W	Motor	without Brake		MFMCD0**2ECD	Fig.3-2
		Brake		MFMCA0**2FCD	Fig.4-1
MSMA 2.0kW	Encoder	17bit, 7-wire	With battery holder for absolute encoder	MFECA0**0ESE	Fig.2-4
MDMA 2.0kW			Without battery holder for absolute encoder	MFECA0**0ESD	Fig.2-5
		2500P/r, 5-wire		MFECA0**0ESD	Fig.2-5
	Motor	without Brake		MFMCD0**2ECT	Fig.3-3
		Brake		MFMCA0**2FCT	Fig.4-2
MSMA 3.0kW to 5.0kW	Encoder	17bit, 7-wire	With battery holder for absolute encoder	MFECA0**0ESE	Fig.2-4
MDMA 3.0kW to 5.0kW			Without battery holder for absolute encoder	MFECA0**0ESD	Fig.2-5
MHMA 2.0kW to 5.0kW		2500P/r, 5-wire		MFECA0**0ESD	Fig.2-5
MGMA 2.0kW to 4.5kW	Motor	without Brake		MFMCA0**3ECT	Fig.3-4
		Brake		MFMCA0**3FCT	Fig.4-3
MFMA 0.4kW, 1.5kW	Encoder	17bit, 7-wire	With battery holder for absolute encoder	MFECA0**0ESE	Fig.2-4
			Without battery holder for absolute encoder	MFECA0**0ESD	Fig.2-5
		2500P/r, 5-wire		MFECA0**0ESD	Fig.2-5
	Motor	without Brake		MFMCA0**2ECD	Fig.3-5
		Brake		MFMCA0**2FCD	Fig.4-1
MFMA 2.5kW, 4.5kW	Encoder	17bit, 7-wire	With battery holder for absolute encoder	MFECA0**0ESE	Fig.2-4
			Without battery holder for absolute encoder	MFECA0**0ESD	Fig.2-5
		2500P/r, 5-wire		MFECA0**0ESD	Fig.2-5
	Motor	without Brake		MFMCD0**3ECT	Fig.3-6
		Brake		MFMCA0**3FCT	Fig.4-3

Options

Junction Cable for Encoder

MFECA00EAE**

MSMD 50W to 750W, MQMA 100W to 400W, MAMA 100W to 750W
17-bit absolute encoder with battery holder

Fig. 2-1

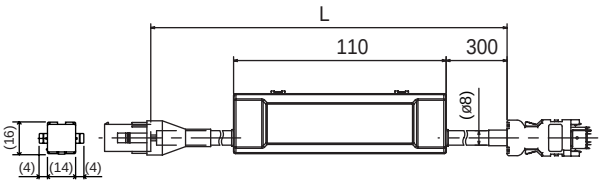

Title	Part No.	Manufacturer
Connector	551055100-0600 or 55100-0670 (lead-free)	Molex Inc.
Connector	172161-1	Tyco Electronics AMP
Connector pin	170365-1	
Cable	0.20mm^2 x 4P	Oki Electric Cable Co.

L(m)	Part No.
3	MFECA0030EAE
5	MFECA0050EAE
10	MFECA0100EAE
20	MFECA0200EAE

Note) Battery for absolute encoder is an option.

MFECA00EAD**

MSMD 50W to 750W, MQMA100W to 400W, MAMA 100W to 750W
17-bit incremental encoder without battery holder

Fig. 2-2

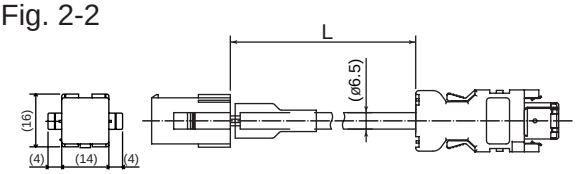

Title	Part No.	Manufacturer
Connector	55100-0600 or 55100-0670 (lead-free)	Molex Inc.
Connector	172161-1	Tyco Electronics AMP
Connector pin	170365-1	
Cable	0.20mm^2 x 3P	Oki Electric Cable Co.

L(m)	Part No.
3	MFECA0030EAD
5	MFECA0050EAD
10	MFECA0100EAD
20	MFECA0200EAD

MFECA00EAM**

MSMD 50W to 750W, MQMA 100W to 400W, MAMA 100W to 750W
2500P/r encoder

Fig. 2-3

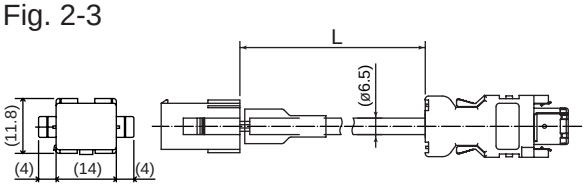

Title	Part No.	Manufacturer
Connector	55100-0600 or 55100-0670 (lead-free)	Molex Inc.
Connector	172160-1	Tyco Electronics AMP
Connector pin	170365-1	
Cable	0.20mm^2 x 3P	Oki Electric Cable Co.

L(m)	Part No.
3	MFECA0030EAM
5	MFECA0050EAM
10	MFECA0100EAM
20	MFECA0200EAM

MFECA00ESE**

MSMA, MDMA, MHMA, MGMA, MFMA
17-bit absolute encoder with battery holder

Fig. 2-4

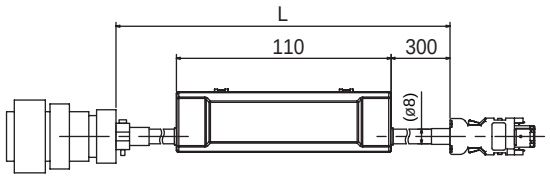

Title	Part No.	Manufacturer
Connector	55100-0600 or 55100-0670 (lead-free)	Molex Inc.
Straight plug	N/MS3106B20-29S	Japan Aviation Electronics Ind.
Cable clamp	N/MS3057-12A	
Cable	0.20mm^2 x 4P	Oki Electric Cable Co.

L(m)	Part No.
3	MFECA0030ESE
5	MFECA0050ESE
10	MFECA0100ESE
20	MFECA0200ESE

Note) Battery for absolute encoder is an option.

MFECA00ESD**

MSMA, MDMA, MHMA, MGMA, MFMA
17-bit incremental encoder without battery holder, 2500P/r encoder

Fig. 2-5

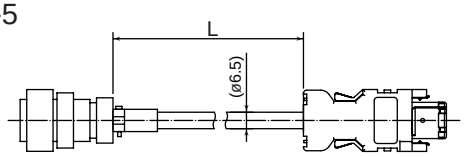

Title	Part No.	Manufacturer
Connector	55100-0600 or 55100-0670 (lead-free)	Molex Inc.
Straight plug	N/MS3106B20-29S	Japan Aviation Electronics Ind.
Cable clamp	N/MS3057-12A	
Cable	0.20mm^2 x 3P	Oki Electric Cable Co.

L(m)	Part No.
3	MFECA0030ESD
5	MFECA0050ESD
10	MFECA0100ESD
20	MFECA0200ESD

Junction Cable for Motor (ROBO-TOP® 105˚C 600V·DP)

ROBO-TOP® is a trade mark of Daiden Co.,Ltd.

MFMCA0**0EED

MSMD 50W to 750W, MQMA 100W to 400W, MAMA 100W to 750W

Fig. 3-1

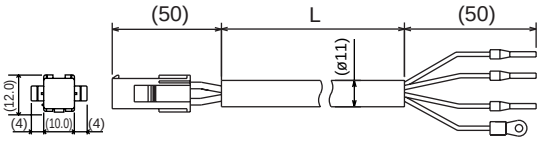

Title	Part No.	Manufacturer
Connector	172159-1	Tyco Electronics AMP
Connector pin	170366-1	
Rod terminal	AI0.75-8GY	Phoenix
Nylon insulated round terminal	N1.25-M4	J.S.T Mfg. Co., Ltd.
Cable	ROBO-TOP 600V 0.75mm²	Daiden Co.,Ltd.

L(m)	Part No.
3	MFMCA0030EED
5	MFMCA0050EED
10	MFMCA0100EED
20	MFMCA0200EED

MFMCD0**2ECD

MSMA 1.0kW to 1.5kW, MDMA 1.0kW to 1.5kW
MHMA 500W to 1.5kW, MGMA 900W

Fig. 3-2

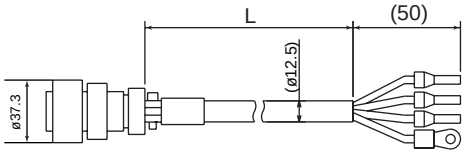

Title	Part No.	Manufacturer
Straight plug	JL04V-6A20-4SE-EB-R	Japan Aviation Electronics Ind.
Cable clamp	JL04-2022CK(14)-R	
Rod terminal	AI2.5-8BU	Phoenix
Nylon insulated round terminal	N2-M4	J.S.T Mfg. Co., Ltd.
Cable	ROBO-TOP 600V 2.0mm²	Daiden Co.,Ltd.

L(m)	Part No.
3	MFMCD0032ECD
5	MFMCD0052ECD
10	MFMCD0102ECD
20	MFMCD0202ECD

MFMCD0**2ECT

MSMA 2.0kW, MDMA 2.0kW

Fig. 3-3

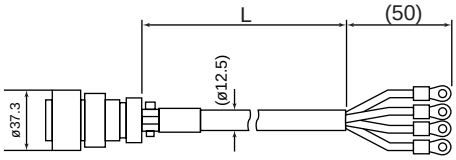

Title	Part No.	Manufacturer
Straight plug	JL04V-6A20-4SE-EB-R	Japan Aviation Electronics Ind.
Cable clamp	JL04-2022CK(14)-R	
Nylon insulated round terminal	N2-5	J.S.T Mfg. Co., Ltd.
Cable	ROBO-TOP 600V 2.0mm²	Daiden Co.,Ltd.

L(m)	Part No.
3	MFMCD0032ECT
5	MFMCD0052ECT
10	MFMCD0102ECT
20	MFMCD0202ECT

MFECA0**3ECT

MSMA 3.0kW to 5.0kW, MDMA 3.0kW to 5.0kW
MHMA 2.0kW to 5.0kW, MGMA 2.0kW to 4.5kW

Fig. 3-4

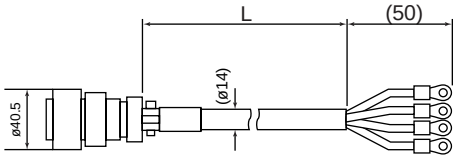

Title	Part No.	Manufacturer
Straight plug	JL04V-6A22-22SE-EB-R	Japan Aviation Electronics Ind.
Cable clamp	JL04-2022CK(14)-R	
Nylon insulated round terminal	N5.5-5	J.S.T Mfg. Co., Ltd.
Cable	ROBO-TOP 600V 3.5mm²	Daiden Co.,Ltd.

L(m)	Part No.
3	MFMCA0033ECT
5	MFMCA0053ECT
10	MFMCA0103ECT
20	MFMCA0203ECT

MFMCA0**2ECD

MFMA 400W to 1.5kW

Fig. 3-5

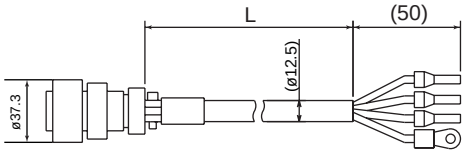

Title	Part No.	Manufacturer
Straight plug	JL04V-6A20-18SE-EB-R	Japan Aviation Electronics Ind.
Cable clamp	JL04-2022CK(14)-R	
Rod terminal	AI2.5-8BU	Phoenix
Nylon insulated round terminal	N2-M4	J.S.T Mfg. Co., Ltd.
Cable	ROBO-TOP 600V 2.0mm²	Daiden Co.,Ltd.

L(m)	Part No.
3	MFMCA0032ECD
5	MFMCA0052ECD
10	MFMCA0102ECD
20	MFMCA0202ECD

MFMCD0**3ECT

MFMA 2.5kW to 4.5kW

Fig. 3-6

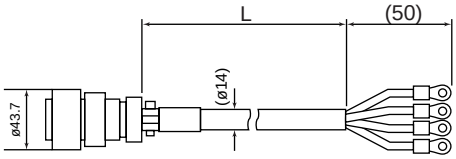

Title	Part No.	Manufacturer
Straight plug	JL04V-6A24-11SE-EB-R	Japan Aviation Electronics Ind.
Cable clamp	JL04-2428CK(17)-R	
Nylon insulated round terminal	N5.5-5	J.S.T Mfg. Co., Ltd.
Cable	ROBO-TOP 600V 3.5mm²	Daiden Co.,Ltd.

L(m)	Part No.
3	MFMCD0033ECT
5	MFMCD0053ECT
10	MFMCD0103ECT
20	MFMCD0203ECT

Options

Junction Cable for Motor with Brake (ROBO-TOP® 105˚C 600V·DP)

ROBO-TOP® is a trade mark of Daiden Co.,Ltd.

MFMCA02FCD**

MSMA 1.0kW to 1.5kW, MDMA 1.0kW to 1.5kW
MHMA 500W to 1.5kW, MFMA 400W to 1.5kW
MGMA 900W

Fig. 4-1

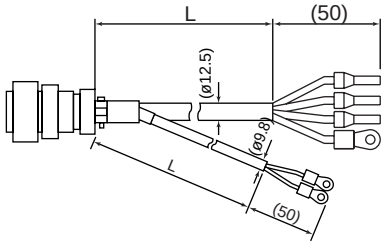

Title		Part No.	Manufacturer
Straight plug		JL04V-6A20-18SE-EB-R	Japan Aviation Electronics Ind.
Cable clamp		JL04-2022CK(14)-R	
Rod terminal		AI2.5-8BU	Phoenix
Nylon insulated round terminal	Earth	N2-M4	J.S.T Mfg. Co., Ltd.
	Brake	N1.25-M4	
Cable		ROBO-TOP 600V 0.75mm² and ROBO-TOP 600V 2.0mm²	Daiden Co.,Ltd.

L(m)	Part No.
3	MFMCA0032FCD
5	MFMCA0052FCD
10	MFMCA0102FCD
20	MFMCA0202FCD

MFMCA02FCT**

MSMA 2.0kW, MDMA 2.0kW

Fig. 4-2

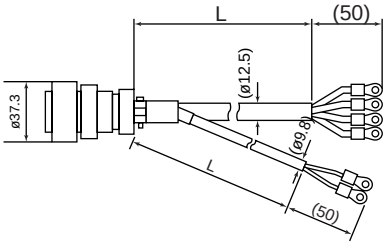

Title		Part No.	Manufacturer
Straight plug		JL04V-6A20-18SE-EB-R	Japan Aviation Electronics Ind.
Cable clamp		JL04-2022CK(14)-R	
Nylon insulated round terminal	Earth	N2-5	J.S.T Mfg. Co., Ltd.
	Brake	N1.25-M4	
Cable		ROBO-TOP 600V 0.75mm² and ROBO-TOP 600V 2.0mm²	Daiden Co.,Ltd.

L(m)	Part No.
3	MFMCA0032FCT
5	MFMCA0052FCT
10	MFMCA0102FCT
20	MFMCA0202FCT

MFMCA03FCT**

MSMA 3.0kW to 5.0kW, MDMA 3.0kW to 5.0kW
MHMA 2.0kW to 5.0kW, MFMA 2.5kW to 4.5kW
MGMA 2.0kW to 4.5kW

Fig. 4-3

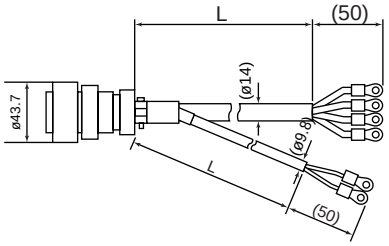

Title		Part No.	Manufacturer
Straight plug		JL04V-6A24-11SE-EB-R	Japan Aviation Electronics Ind.
Cable clamp		JL04-2428CK(17)-R	
Nylon insulated round terminal	Earth	N5.5-5	J.S.T Mfg. Co., Ltd.
	Brake	N1.25-M4	
Cable		ROBO-TOP 600V 0.75mm² and ROBO-TOP 600V 3.5mm²	Daiden Co.,Ltd.

L(m)	Part No.
3	MFMCA0033FCT
5	MFMCA0053FCT
10	MFMCA0103FCT
20	MFMCA0203FCT

Junction Cable for Brake (ROBO-TOP® 105˚C 600V·DP)

ROBO-TOP® is a trade mark of Daiden Co.,Ltd.

MFMCB00GET**

MSMD 50W to 750W
MQMA 100W to 400W
MAMA 100W to 750W

Fig. 5-1

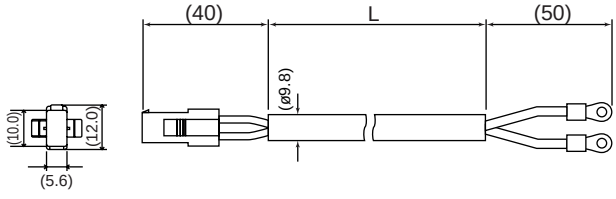

Title	Part No.	Manufacturer
Connector	172157-1	Tyco Electronics AMP
Connector pin	170366-1,170362-1	
Nylon insulated round terminal	N1.25-M4	J.S.T Mfg. Co., Ltd.
Cable	ROBO-TOP 600V 0.75mm²	Daiden Co.,Ltd.

L(m)	Part No.
3	MFMCB0030GET
5	MFMCB0050GET
10	MFMCB0100GET
20	MFMCB0200GET

Connector Kit for External Peripheral Equipments

1) Par No. **DV0P4350**

2) Components

Title	Part No.	Quantity	Manufacturer	Note
Connector	54306-5011 or 54306-5019 (lead-free)	1	Molex Inc.	For CN X5 (50-pins)
Connector cover	54331-0501	1		

3) Pin disposition (50 pins) (viewed from the soldering side)

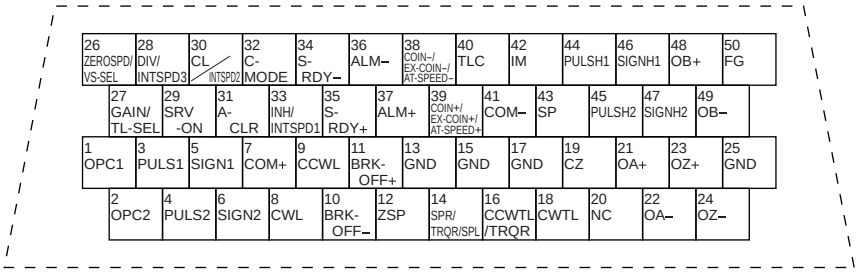

<Cautions>

1) Check the stamped pin-No. on the connector body while making a wiring.
2) For the function of each signal title or its symbol, refer to the wiring example of the connector CN I/F.
3) Check the stamped pin-No. on the connector body while making a wiring.

Interface Cable

1) Par No. **DV0P4360**

2) Dimensions

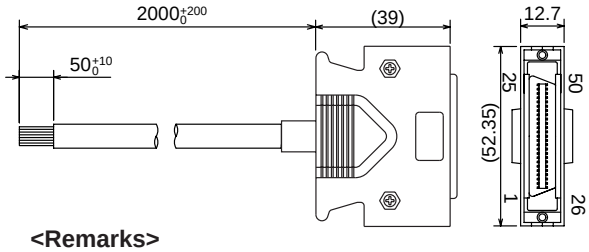

<Remarks>
Color designation of the cable
e.g.) Pin-1 Cable color : Orange
(Red1) : One red dot on the cable

3) Table for wiring

Cable of 2m is connected.

Pin No.	color	Pin No.	color	Pin No.	color	Pin No.	color	Pin No.	color
1	Orange (Red1)	11	Orange (Black2)	21	Orange (Red3)	31	Orange (Red4)	41	Orange (Red5)
2	Orange (Black1)	12	Yellow (Black1)	22	Orange (Black3)	32	Orange (Black4)	42	Orange (Black5)
3	Gray (Red1)	13	Gray (Red2)	23	Gray (Red3)	33	Gray (Red4)	43	Gray (Red5)
4	Gray (Black1)	14	Gray (Black2)	24	Gray (Black3)	34	White (Red4)	44	White (Red5)
5	White (Red1)	15	White (Red2)	25	White (Red3)	35	White (Black4)	45	White (Black5)
6	White (Black1)	16	Yellow (Red2)	26	White (Black3)	36	Yellow (Red4)	46	Yellow (Red5)
7	Yellow (Red1)	17	Yel (Blk2)/ Pink (Blk2)	27	Yellow (Red3)	37	Yellow (Black4)	47	Yellow (Black5)
8	Pink (Red1)	18	Pink (Red2)	28	Yellow (Black3)	38	Pink (Red4)	48	Pink (Red5)
9	Pink (Black1)	19	White (Black2)	29	Pink (Red3)	39	Pink (Black4)	49	Pink (Black5)
10	Orange (Red2)	20	—	30	Pink (Black3)	40	Gray (Black4)	50	Gray (Black5)

Communication Cable (for connection to PC)

Par No. **DV0P1960** **(DOS/V machine)**

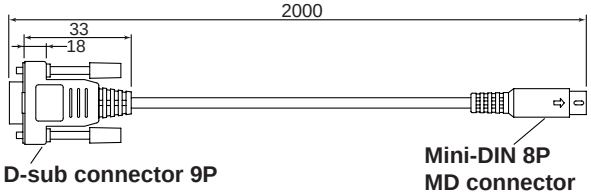

Communication Cable (for RS485)

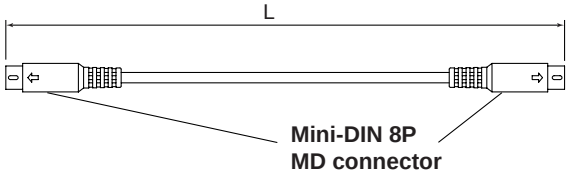

Part No.	L[mm]
DVOP1970	200
DVOP1971	500
DVOP1972	1000

Setup Support Software "PANATERM®"

1) Part No. **DV0P4460** **(English/Japanese version)**
2) Supply media : CD-ROM

<Caution>
For setup circumstance, refer to the Instruction Manual of [PANATERM®].

Options

Connector Kit for Motor/Encoder Connection

These are required when you make your own encoder and motor cables.

•Applicable motor models : MSMD 50W to 750W
MQMA 100W to 400W
MAMA 100W to 750W
17-bit absolute
For brake, purchase our optional brake cable.

1) Part No. **DV0P4290**

2) Components

Title	Part No.	Number	Manufacturer	Note
Connector	55100-0600 or 55100-0670 (lead-free)	**1**	Molex Inc.	For CN X6 (6-pins)
Connector	172161-1	**1**	Tyco Electronics AMP	For junction cable to encoder (9-pins)
Connector pin	170365-1	**9**		
Connector	172159-1	**1**	Tyco Electronics AMP	For junction cable to motor (4-pins)
Connector pin	170366-1	**4**		

3) Pin disposition of connector, CN X6

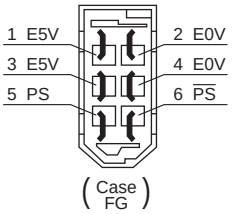

4) Pin disposition of junction cable for encoder

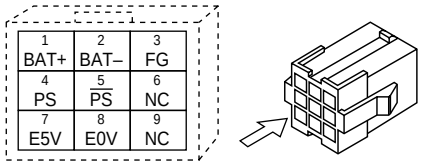

5) Pin disposition of junction cable for motor power

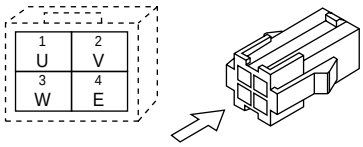

*When you connect the battery for absolute encoder, refer to P.270, "When you make your own cable for 17-bit absolute encoder"

•Applicable motor models : MSMD 50W to 750W
MQMA 100W to 400W
MAMA 100W to 750W
2500P/r incremental encoder
For brake, purchase our optional brake cable.

1) Part No. **DV0P4380**

2) Components

Title	Part No.	Number	Manufacturer	Note
Connector	55100-0600 or 55100-0670 (lead-free)	1	Molex Inc.	For CN X6 (6-pins)
Connector	172160-1	1	Tyco Electronics AMP	For junction cable to encoder (6-pins)
Connector pin	170365-1	6		
Connector	172159-1	1	Tyco Electronics AMP	For junction cable to encoder (4-pins)
Connector pin	170366-1	4		

3) Pin disposition of connector, CN X6

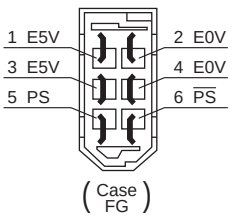

4) Pin disposition of junction cable for encoder

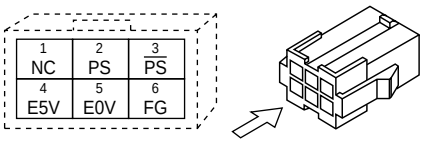

5) Pin disposition of junction cable for motor power

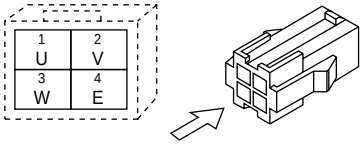

For DVOP2490, DV0P3480,
• recommended manual crimp tool
(to be prepared by customer)

Title	Part No.	Manufacturer
For junction cable to encoder	755330 - 1	Tyco Electronics AMP
For junction cable to motor	755331 - 1	

•Applicable motor models : MSMA 1.0kW to 2.0kW
MDMA 1.0kW to 2.0kW
MHMA 500W to 1.5kW
MGMA 900W
[17-bit absolute incremental encoder, 2500P/r incremental encoder] Without brake

1) Part No. **DV0P4310**

2) Components

Title	Part No.	Number	Manufacturer	Note
Connector	55100-0600 or 55100-0670 (lead-free)	1	Molex Inc.	For CN X6 (6-pins)
Straight plug	N/MS3106B20-29S	1	Japan Aviation Electronics Industry Ltd.	For junction cable to encoder
Cable clamp	N/MS3057-12A	1		
Straight plug	N/MS3106B20-4S	1	Japan Aviation Electronics Industry Ltd.	For junction cable to motor power
Cable clamp	N/MS3057-12A	1		

•Applicable motor models : MSMA 3.0kW to 5.0kW
MDMA 3.0kW to 5.0kW
MHMA 2.0kW to 5.0kW
MGMA 2.0kW to 4.5kW
[17-bit absolute incremental encoder, 2500P/r incremental encoder] Without brake

1) Part No. **DV0P4320**

2) Components

Title	Part No.	Number	Manufacturer	Note
Connector	55100-0600 or 55100-0670 (lead-free)	1	Molex Inc.	For CN X6 (6-pins)
Straight plug	N/MS3106B-20-29S	1	Japan Aviation Electronics Industry Ltd.	For junction cable to encoder
Cable clamp	N/MS3057-12A	1		
Straight plug	N/MS3106B22-22S	1	Japan Aviation Electronics Industry Ltd.	For junction cable to motor power
Cable clamp	N/MS3057-12A	1		

•Applicable motor models : MSMA 1.0kW to 2.0kW
MDMA 1.0kW to 2.0kW
MHMA 0.5kW to 1.5kW
MGMA 900W
[17-bit absolute incremental encoder, 2500P/r incremental encoder] With brake

MFMA 0.4kW to 1.5kW
[17-bit absolute incremental encoder, 2500P/r incremental encoder] Without brake / With brake

1) Part No. **DV0P4330**

2) Components

Title	Part No.	Number	Manufacturer	Note
Connector	55100-0600 or 55100-0670 (lead-free)	1	Molex Inc.	For CN X6 (6-pins)
Straight plug	N/MS3106B20-29S	1	Japan Aviation Electronics Industry Ltd.	For junction cable to encoder
Cable clamp	N/MS3057-12A	1		
Straight plug	N/MS3106B20-18S	1	Japan Aviation Electronics Industry Ltd.	For junction cable to motor power
Cable clamp	N/MS3057-12A	1		

•Applicable motor models : MSMA 3.0kW to 5.0kW
MDMA 3.0kW to 5.0kW
MHMA 2.0kW to 5.0kW
MGMA 2.0kW to 4.5kW
[17-bit absolute incremental encoder, 2500P/r incremental encoder] With brake

MFMA 2.5kW to 4.5kW
[17-bit absolute incremental encoder, 2500P/r incremental encoder] Without brake / With brake

1) Part No. **DV0P4340**

2) Components

Title	Part No.	Number	Manufacturer	Note
Connector	55100-0600 or 55100-0670 (lead-free)	1	Molex Inc.	For CN X6 (6-pins)
Straight plug	N/MS3106B20-29S	1	Japan Aviation Electronics Industry Ltd.	For junction cable to encoder
Cable clamp	N/MS3057-12A	1		
Straight plug	N/MS3106B24-11S	1	Japan Aviation Electronics Industry Ltd.	For junction cable to motor power
Cable clamp	N/MS3057-16A	1		

Options

Mounting Bracket

Frame symbol of applicable driver	part No.	Mounting screw	Dimensions	
			Upper side	Bottom side
A-frame	**DV0P 4271**	M4 x L6 Pan head 4pcs	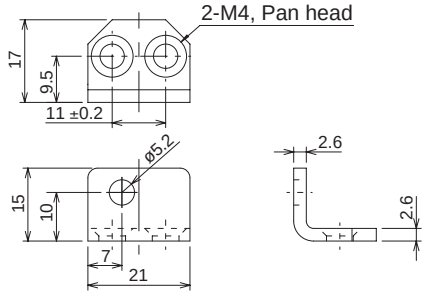	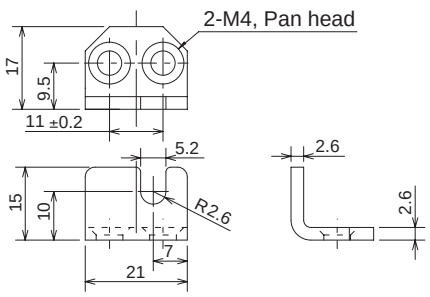
B-frame	**DV0P 4272**	M4 x L6 Pan head 4pcs	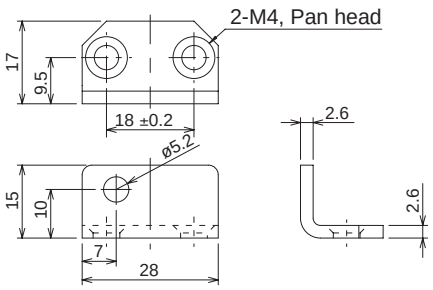	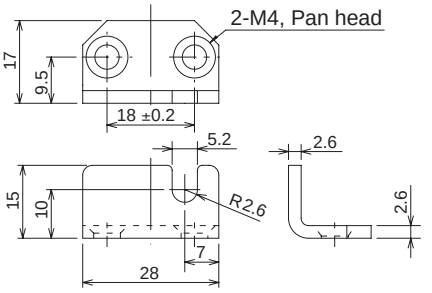
C-frame	**DV0P 4273**	M4 x L6 Pan head 4pcs	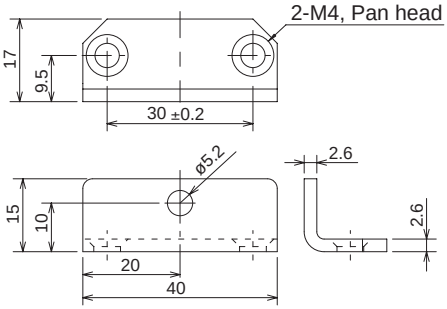	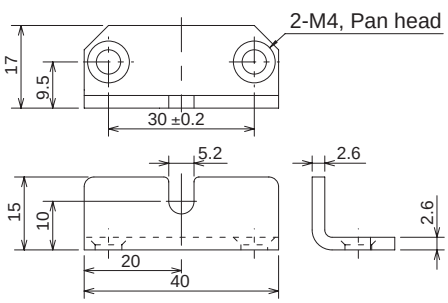
D-frame	**DV0P 4274**	M4 x L6 Pan head 4pcs	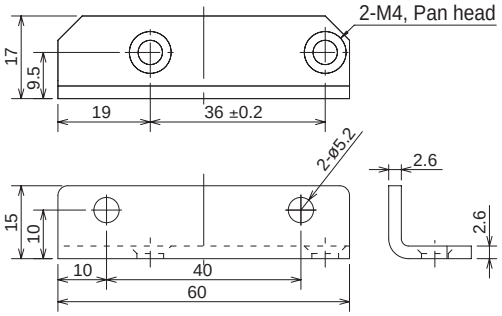	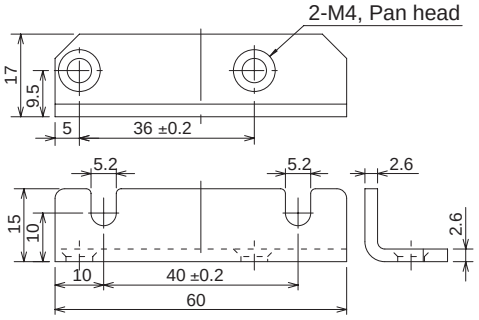

<Caution>

For E and F-frame, you con make a front end and back end mounting by changing the mounting direction of L-shape bracket (attachment).

Console

Part No. **DV0P4420**

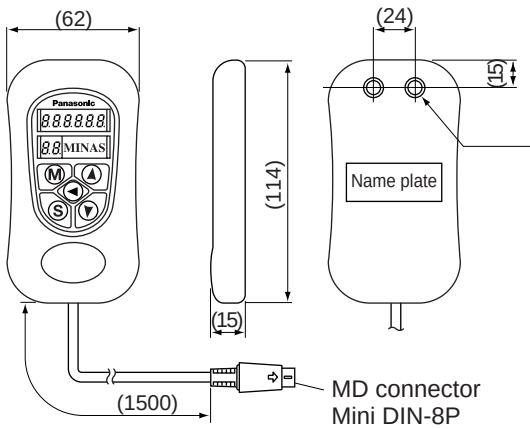

Reactor

Fig.1

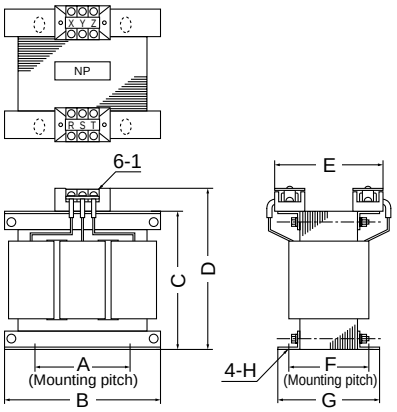

Fig.2

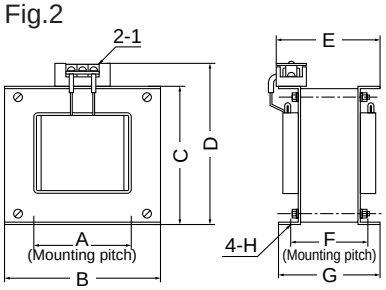

	Part No.	A	B	C	D	E	F	G	H	I	Inductance (mH)	Rated current (A)
Fig.1	**DV0P220**	65	125	83	118	145	70	85	7(w) x 12(L)	M4	6.81	3
	DV0P221	60	150	113	137	120	60	75	7(w) x 12(L)	M4	4.02	5
	DV0P222	60	150	113	137	130	70	95	7(w) x 12(L)	M4	2	8
	DV0P223	60	150	113	137	140	79	95	7(w) x 12(L)	M4	1.39	11
	DV0P224	60	150	113	137	145	84	100	7(w) x 12(L)	M4	0.848	16
	DV0P225	60	150	113	137	160	100	115	7(w) x 12(L)	M5	0.557	25
Fig.2	**DV0P226**	55	80	68	90	90	41	55	ø7.0	M4	6.81	3
	DV0P227	55	80	68	90	90	41	55	ø7.0	M4	4.02	5
	DV0P228	55	80	68	90	95	46	60	ø7.0	M4	2	8
	DV0P229	55	80	68	90	105	56	70	ø7.0	M4	1.39	11

Motor series	Power supply	Rated output	Part No.
MSMD	Single phase, 100V	50W to 100W	DV0P227
MQMA		100W	
MSMD		200W to 400W	DV0P228
MQMA			
MSMD	Single phase, 200V	50W to 200W	DV0P220
MQMA		100W to 200W	
MAMA			
MFMA		400W	
MHMA		500W	
MSMD		400W to 750W	DV0P221
MQMA		400W	
MAMA		400W to 750W	
MAMA	3-phase, 200V	400W	DV0P220
MFMA			
MHMA		500W	
MSMD		750W	DV0P221
MAMA			

Motor series	Power supply	Rated output	Part No.
MGMA	3-phase, 200V	900W	DV0P222
MSMA		1.0kW 1.5kW	
MDMA			
MHMA			
MFMA		1.5kW	
MSMA		2.0kW	DV0P223
MDMA			
MHMA			
MGMA			
MFMA		2.5kW	DV0P224
MSMA		3.0kW	
MDMA			
MHMA			
MGMA			
MSMA		4.0kW	DV0P225
MDMA			
MHMA			

Harmonic restraint

On September, 1994, " Guidelines for harmonic restraint on heavy consumers who receive power through high voltage system or extra high voltage system" and " Guidelines for harmonic restraint on household electrical appliances and general-purpose articles" established by the Agency for Natural Resources and Energy of the Ministry of Economy, Trade and Industry (the ex-Ministry of International Trade and Industry). According to those guidelines, the Japan Electrical Manufacturers' Association (JEMA) have prepared technical documents (procedure to execute harmonic restraint: JEM-TR 198, JEM-TR 199 and JEM-TR 201) and have been requesting the users to understand the restraint and to cooperate with us. On January, 2004, it has been decided to exclude the general-purpose inverter and servo driver from the " Guidelines for harmonic restraint on household electrical appliances and general-purpose articles" . After that, the " Guidelines for harmonic restraint on household electrical appliances and general-purpose articles" was abolished on September 6, 2004.

We are pleased to inform you that the procedure to execute the harmonic restraint on general-purpose inverter and servo driver was modified as follows.

1. All types of the general-purpose inverters and servo drivers used by specific users are under the control of the " Guidelines for harmonic restraint on heavy consumers who receive power through high voltage system or extra high voltage system" . The users who are required to apply the guidelines must calculate the equivalent capacity and harmonic current according to the guidelines and must take appropriate countermeasures if the harmonic current exceeds a limit value specified in a contract demand. (Refer to JEM-TR 210 and JEM-TR 225.)
2. The " Guidelines for harmonic restraint on household electrical appliances and general-purpose articles" was abolished on September 6, 2004. However, based on conventional guidelines, JEMA applies the technical documents JEM-TR 226 and JEM-TR 227 to any users who do not fit into the " Guidelines for harmonic restraint on heavy consumers who receive power through high voltage system or extra high voltage system" from a perspective on enlightenment on general harmonic restraint. The purpose of these guidelines is the execution of harmonic restraint at every device by a user as usual to the utmost extent.

Options

External Regenerative Resistor

Part No.	Manufacturer's part No.	Specifications					Activation temperature of built-in thermostat
		Resistance	Rated power (reference) *				
			Free air	with fan [W]			
		Ω	[W]	1m/s	2m/s	3m/s	
DV0P4280	RF70M	50	10	25	35	45	140±5˚C B-contact Open/Close capacity (resistance load) 4A 125VAC 10000 times 2.5A 250VAC 10000 times
DV0P4281	RF70M	100	10	25	35	45	
DV0P4282	RF18B	25	17	50	60	75	
DV0P4283	RF18B	50	17	50	60	75	
DV0P4284	RF240	30	40	100	120	150	
DV0P4285	RH450F	20	52	130	160	200	

Manufacturer : Iwaki Musen Kenkyusho

* Power with which the driver can be used without activating the built-in thermostat.

DV0P4280, DV0P4281

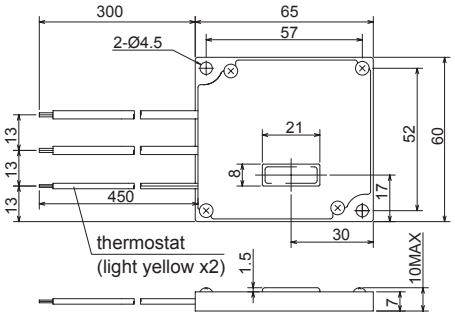

DV0P4282,DV0P4283

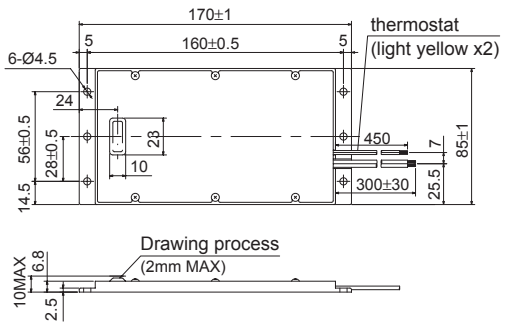

Frame	Power supply	
	Single phase, 100V	Single phase, 200V 3-phase, 200V
A	DV0P4280	DV0P4281
B	DV0P4283	DV0P4283
C	DV0P4282	
D	–	DV0P4284
E		DV0P4285
F		Arrange 2 DV0P4285 in a parallel

DV0P4284

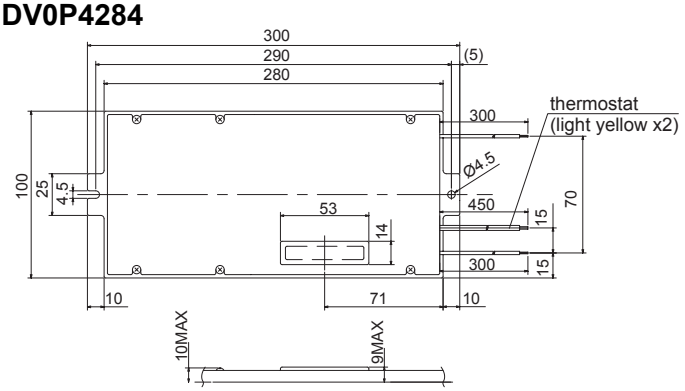

DV0P4285

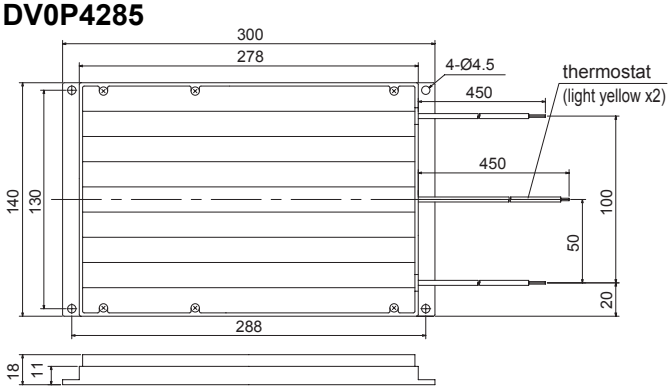

<Remarks>

Thermal fuse is installed for safety. Compose the circuit so that the power will be turned off when the thermostat is activated. The thermal fuse may blow due to heat dissipating condition, working temperature, supply voltage or load fluctuation.

Make it sure that the surface temperature of the resistor may not exceed 100˚C at the worst running conditions with the machine, which brings large regeneration (such case as high supply voltage, load inertia is large or deceleration time is short) Install a fan for a forced cooling if necessary.

<Caution>

Regenerative resistor gets very hot.

Take preventive measures for fire and burns.
Avoid the installation near inflammable objects, and easily accessible place by hand.

Battery For Absolute Encoder

Battery

(1) Part No. **DV0P2990**

(2) Lithium battery by Toshiba Battery Co.
ER6V, 3.6V 2000mAh

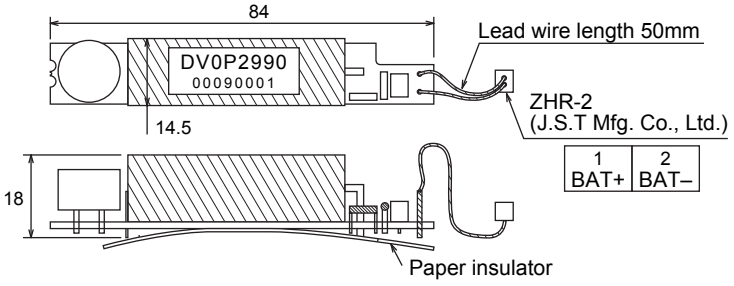

<Caution>

This battery is categorized as hazardous substance, and you may be required to present an application of hazardous substance when you transport by air (both passenger and cargo airlines).

Surge Absorber for Motor Brake

Motor	Surge absorber for motor brake
MSMD 50W to 1.0kW	• C-5A2 or Z15D151 Ishizuka Electronics Co.
MAMA 100W to 750W	
MHMA 2.0kW to 5.0kW	
MGMA 900W to 2.0kW	
MSMA 1.5kW to 5.0kW	• C-5A3 or Z15D151 Ishizuka Electronics Co.
MDMA 4.0kW to 5.0kW	
MFMA 1.5kW	
MGMA 3.0kW to 4.5kW	
MDMA 1.0kW to 3.0kW	• TNR9V820K Nippon Chemi_Con Co.
MFMA 400W	
MFMA 2.5kW to 4.5kW	
MHMA 500W to 1.5kW	

List of Peripheral Equipments (reference only)

As of Nov.2004

Manufacturer	Tel No./URL	Peripheral components
Automation Controls Company Matsushita Electric Works, Ltd.	81-6-6908-1131 http://www.mew.co.jp	Non-fuse breaker Magnetic contactor Surge absorber
Iwaki Musen Kenkyusho Co., Ltd.	81-44-833-4311 http://www.iwakimusen.co.jp/	Regenerative resistor
Nippon Chemi_Con Corp.	81-3-5436-7608 http://www.chemi_con.co.jp/	Surge absorber for holding brake
Ishizuka Electronics Corp.	81-3-3621-2703 http://www.semitec.co.jp/	
Renesas Technology Corp.	81-6-6233-9511 http://www.renesas.com/jpn/	
TDK Corp.	81-3-5201-7229 http://www.tdk.co.jp/	Noise filter for signal lines
Okaya Electric Industries Co. Ltd.	81-3-3424-8120 http://www.okayatec.co.jp/	Surge absorber Noise filter
Japan Aviation Electronics Industry, Ltd.	81-3-3780-2717 http://www.jae.co.jp	Connector
Sumitomo 3M	81-3-5716-7290 http://www.mmmco.jp	
Tyco Electronics AMP k.k,	81-44-844-8111 http://www.tycoelectronics.com/japan/amp	
Japan Molex Inc.	81-462-65-2313 http://www.molex.co.jp	
Hirose Electric Co., Ltd.	81-3-3492-2161 http://www.hirose.co.jp/	
J.S.T Mfg. Co., Ltd.	81-45-543-1271 http://www.jst-mfg.com/	
Daiden Co., Ltd.	81-3-5805-5880 http://www.dyden.co.jp/	Cable
Mitutoyo Corp.	81-44-813-5410 http://www.mitutoyo.co.jp	Linear scale

* The above list is for reference only. We may change the manufacturer without notice.

Dimensions (Driver)

A-frame

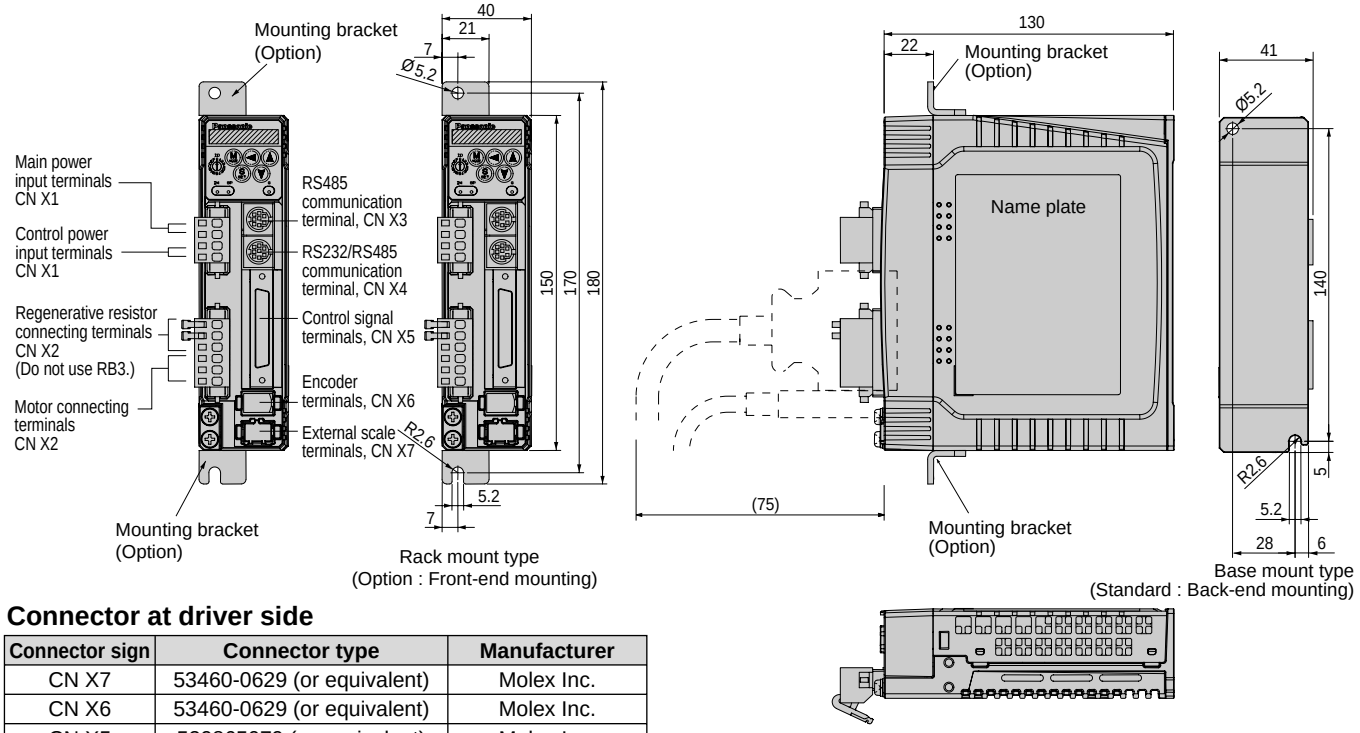

Connector at driver side

Connector sign	Connector type	Manufacturer
CN X7	53460-0629 (or equivalent)	Molex Inc.
CN X6	53460-0629 (or equivalent)	Molex Inc.
CN X5	529865079 (or equivalent)	Molex Inc.
CN X4	MD-S8000-10 (or equivalent)	J.S.T. Mfg.Co., Ltd.
CN X3	MD-S8000-10 (or equivalent)	J.S.T. Mfg.Co., Ltd.
CN X2	S06B-F32SK-GGXR (or equivalent)	J.S.T. Mfg.Co., Ltd.
CN X1	S04B-F32SK-GGXR (or equivalent)	J.S.T. Mfg.Co., Ltd.

* Refer to P.322, "Mounting bracket for driver"of Options, when you use the optional mounting bracket.

Mass 0.8kg

B-frame

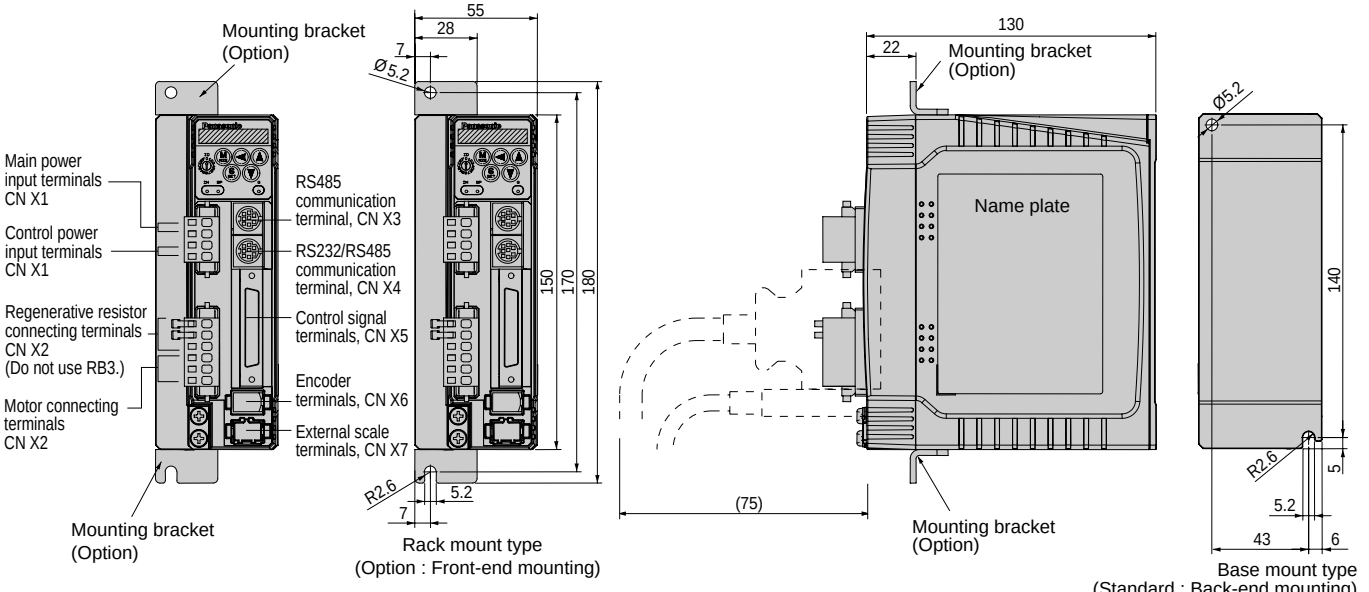

Connector at driver side

Connector sign	Connector type	Manufacturer
CN X7	53460-0629 (or equivalent)	Molex Inc.
CN X6	53460-0629 (or equivalent)	Molex Inc.
CN X5	529865079 (or equivalent)	Molex Inc.
CN X4	MD-S8000-10 (or equivalent)	J.S.T. Mfg.Co., Ltd.
CN X3	MD-S8000-10 (or equivalent)	J.S.T. Mfg.Co., Ltd.
CN X2	S06B-F32SK-GGXR (or equivalent)	J.S.T. Mfg.Co., Ltd.
CN X1	S04B-F32SK-GGXR (or equivalent)	J.S.T. Mfg.Co., Ltd.

* Refer to P.322, "Mounting bracket for driver"of Options, when you use the optional mounting bracket.

Mass 1.1kg

C-frame

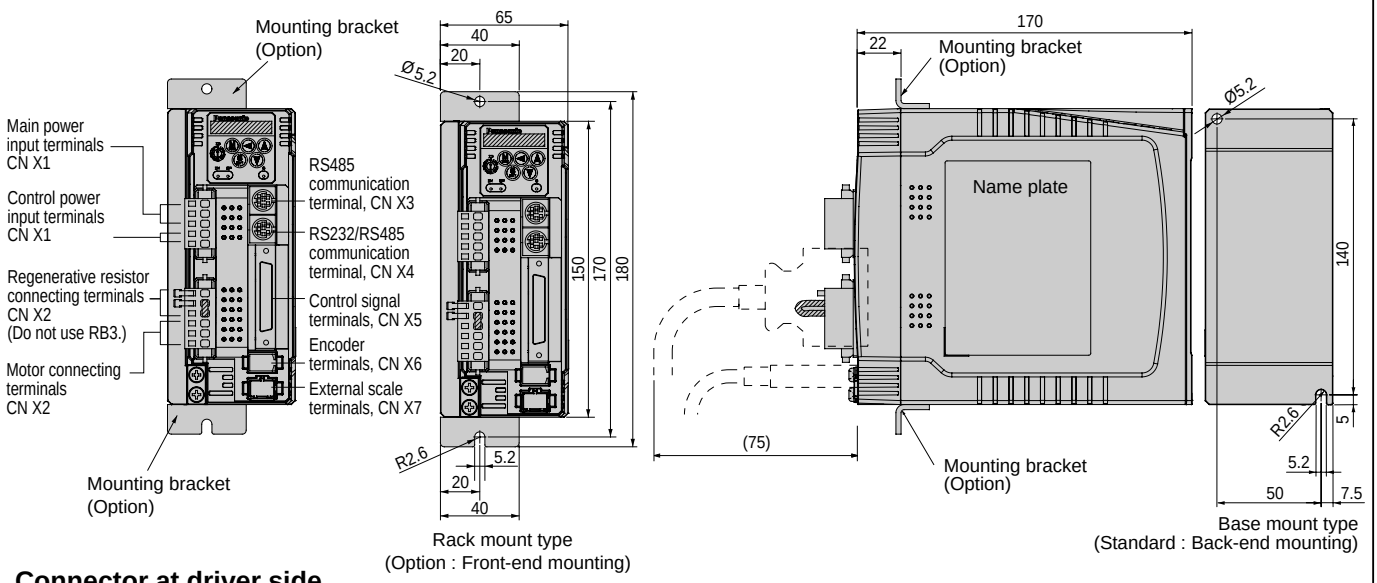

Connector at driver side

Connector sign	Connector type	Manufacturer
CN X7	53460-0629 (or equivalent)	Molex Inc.
CN X6	53460-0629 (or equivalent)	Molex Inc.
CN X5	529865079 (or equivalent)	Molex Inc.
CN X4	MD-S8000-10 (or equivalent)	J.S.T. Mfg.Co., Ltd.
CN X3	MD-S8000-10 (or equivalent)	J.S.T. Mfg.Co., Ltd.
CN X2	S06B-F32SK-GGXR (or equivalent)	J.S.T. Mfg.Co., Ltd.
CN X1	S05B-F32SK-GGXR (or equivalent)	J.S.T. Mfg.Co., Ltd.

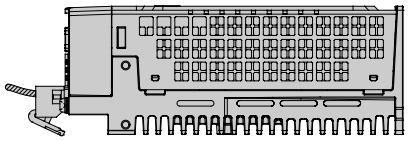

* Refer to P.322, "Mounting bracket for driver"of Options, when you use the optional mounting bracket.

Mass 1.5kg

D-frame

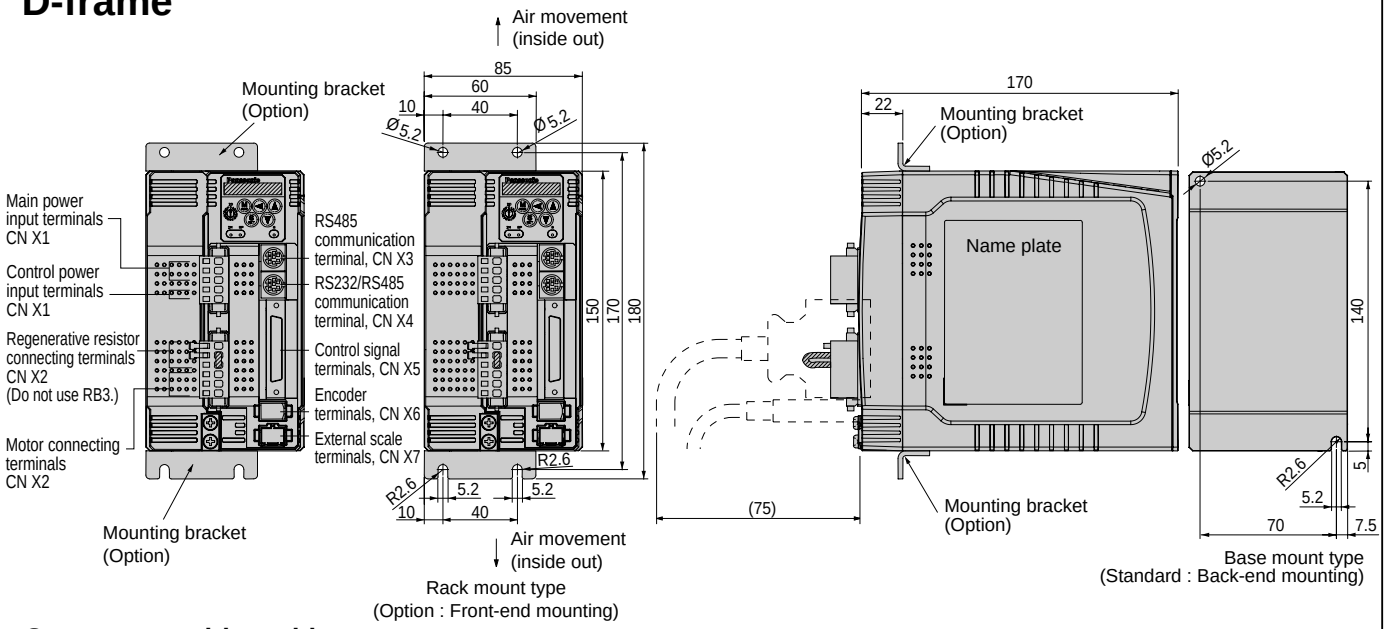

Connector at driver side

Connector sign	Connector type	Manufacturer
CN X7	53460-0629 (or equivalent)	Molex Inc.
CN X6	53460-0629 (or equivalent)	Molex Inc.
CN X5	529865079 (or equivalent)	Molex Inc.
CN X4	MD-S8000-10 (or equivalent)	J.S.T. Mfg.Co., Ltd.
CN X3	MD-S8000-10 (or equivalent)	J.S.T. Mfg.Co., Ltd.
CN X2	S06B-F32SK-GGXR (or equivalent)	J.S.T. Mfg.Co., Ltd.
CN X1	S05B-F32SK-GGXR (or equivalent)	J.S.T. Mfg.Co., Ltd.

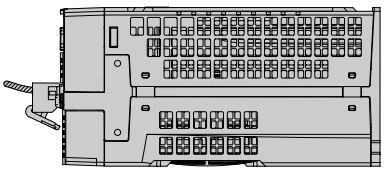

* Refer to P.322, "Mounting bracket for driver"of Options, when you use the optional mounting bracket.

Mass 1.7kg

Dimensions (Driver)

E-frame

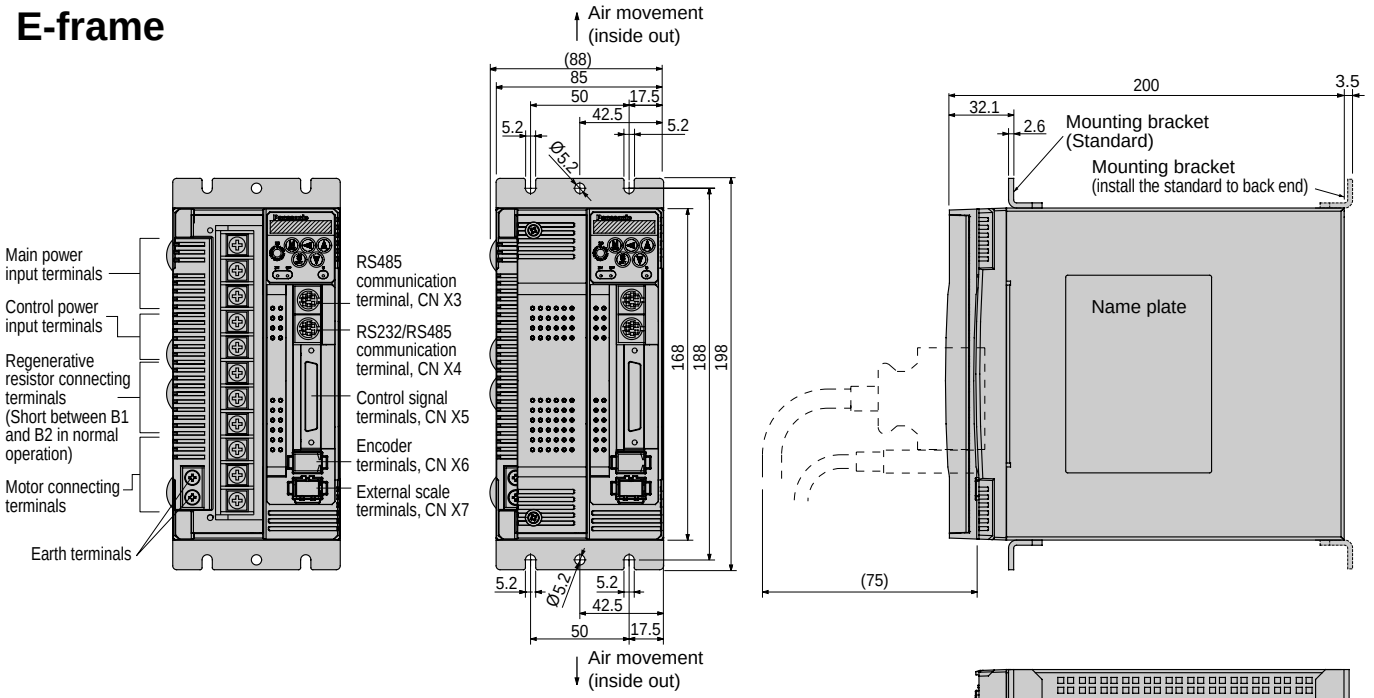

Connector at driver side

Connector sign	Connector type	Manufacturer
CN X7	53460-0629 (or equivalent)	Molex Inc.
CN X6	53460-0629 (or equivalent)	Molex Inc.
CN X5	529865079 (or equivalent)	Molex Inc.
CN X4	MD-S8000-10 (or equivalent)	J.S.T. Mfg.Co., Ltd.
CN X3	MD-S8000-10 (or equivalent)	J.S.T. Mfg.Co., Ltd.

Mass 3.2kg

F-frame

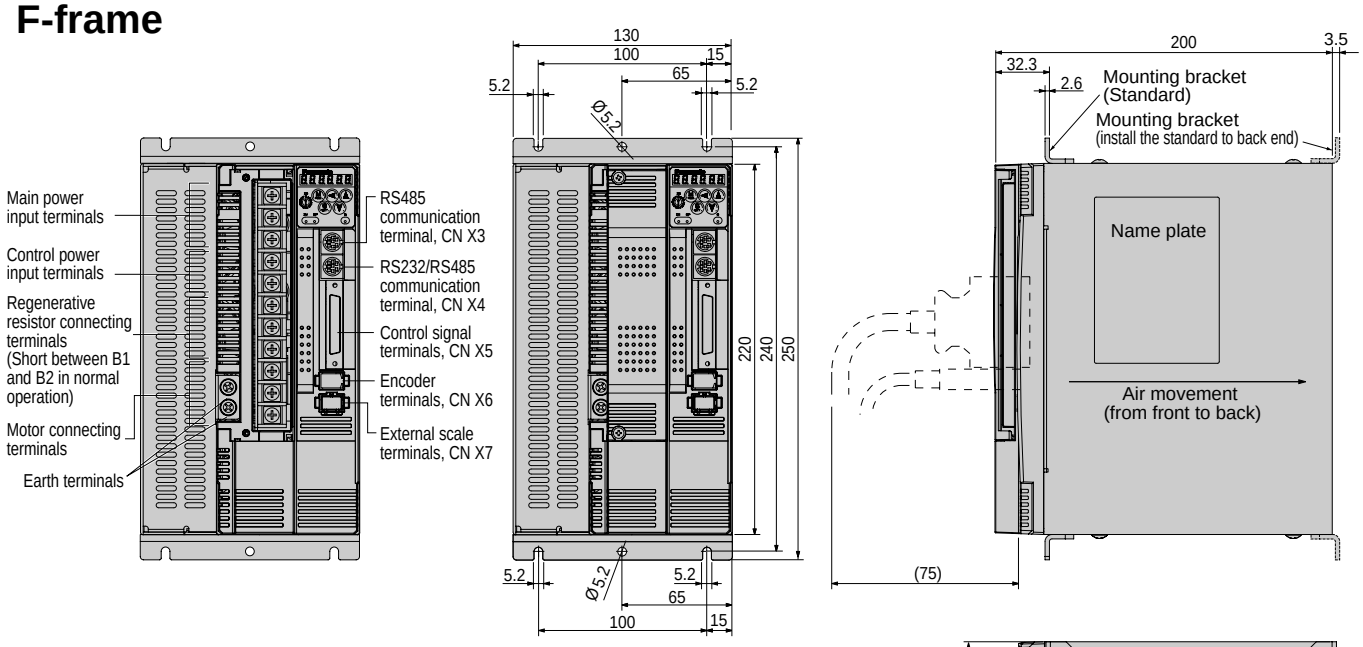

Connector at driver side

Connector sign	Connector type	Manufacturer
CN X7	53460-0629 (or equivalent)	Molex Inc.
CN X6	53460-0629 (or equivalent)	Molex Inc.
CN X5	529865079 (or equivalent)	Molex Inc.
CN X4	MD-S8000-10 (or equivalent)	J.S.T. Mfg.Co., Ltd.
CN X3	MD-S8000-10 (or equivalent)	J.S.T. Mfg.Co., Ltd.

Mass 6.0kg

Dimensions (Motor)

• MAMA 100W to 750W

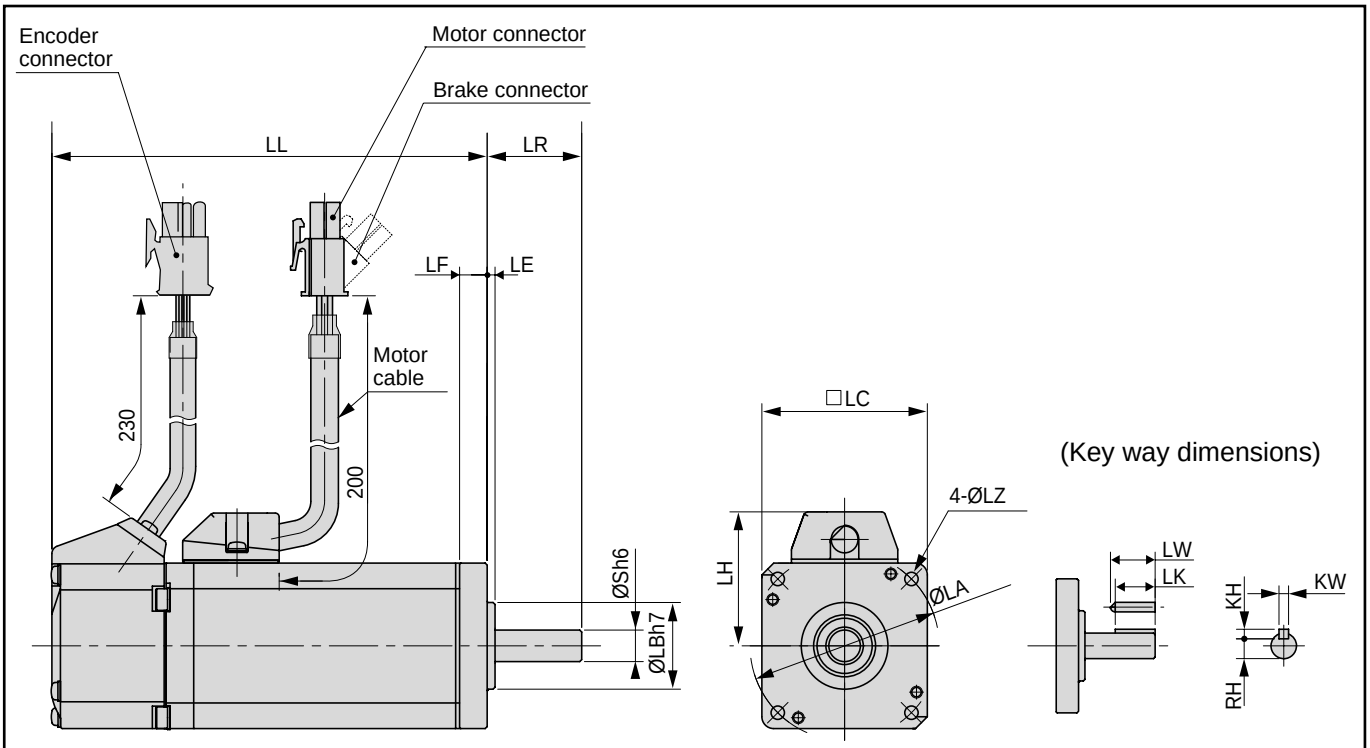

* Dimensions are subject to change without notice. Contact us or a dealer for the latest information.

		MAMA series (Ultra low inertia)							
Motor output		100W		200W		400W		750W	
Motor model	MAMA	012P1 *	012S1 *	022P1 *	022S1 *	042P1 *	042S1 *	082P1 *	082S1 *
Rotary encoder specifications		2500P/r Incremental	17-bit Absolute/ Incremental	2500P/r Incremental	17-bit Absolute/ Incremental	2500P/r Incremental	17-bit Absolute/ Incremental	2500P/r Incremental	17-bit Absolute/ Incremental
LL	Without brake	110.5	127	111	126	139	154	160	175
	With brake	138	154.5	139	154	167	182	192.5	207.5
LR		24		30		30		35	
S		8		11		14		19	
LA		48		70		70		90	
LB		22		50		50		70	
LC		42		60		60		80	
LD		—		—		—		—	
LE		2		3		3		3	
LF		7		7		7		8	
LG		—		—		—		—	
LH		34		43		43		53	
LZ		3.4		4.5		4.5		6	
Key way dimensions	LW	14		20		25		25	
	LK	12.5		18		22.5		22	
	KW	3h9		4h9		5h9		6h9	
	KH	3		4		5		6	
	RH	6.2		8.5		11		15.5	
Mass (kg)	Without brake	0.65	0.71	1.1	1.2	1.5	1.6	3.3	3.4
	With brake	0.85	0.91	1.5	1.6	1.9	2.0	4.0	4.1
Connector/Plug specifications		Refer to P.318, "Options".							

<Cautions>
Reduce the moment of inertia ratio if high speed response operation is required.

Dimensions (Motor)

• MSMD 50W to 100W

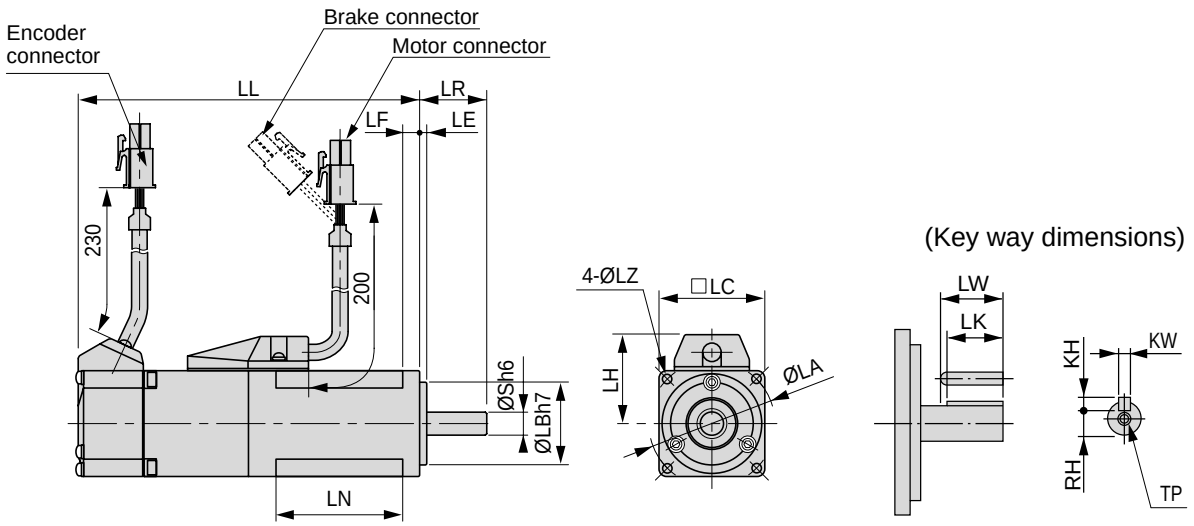

* Dimensions are subject to change without notice. Contact us or a dealer for the latest information.

		MSMD series (low inertia)			
Motor output		50W		100W	
Motor model	MSMD	5A * P1 *	5A * S1 *	01 * P1 *	01 * S1 *
Rotary encoder specifications		2500P/r Incremental	17-bit Absolute/ Incremental	2500P/r Incremental	17-bit Absolute/ Incremental
LL	Without brake	72		92	
	With brake	102		122	
LR		25		25	
S		8		8	
LA		45		45	
LB		30		30	
LC		38		38	
LD		—		—	
LE		3		3	
LF		6		6	
LG		—		—	
LH		32		32	
LN		26.5		46.5	
LZ		3.4		3.4	
Key way dimensions	LW	14		14	
	LK	12.5		12.5	
	KW	3h9		3h9	
	KH	3		3	
	RH	6.2		6.2	
	TP	M3 x 6 (depth)		M3 x 6 (depth)	
Mass (kg)	Without brake	0.32		0.47	
	With brake	0.53		0.68	
Connector/Plug specifications		Refer to P.318, "Options".			

<Cautions>
Reduce the moment of inertia ratio if high speed response operation is required.

• MSMD 200W to 750W

(Key way dimensions)

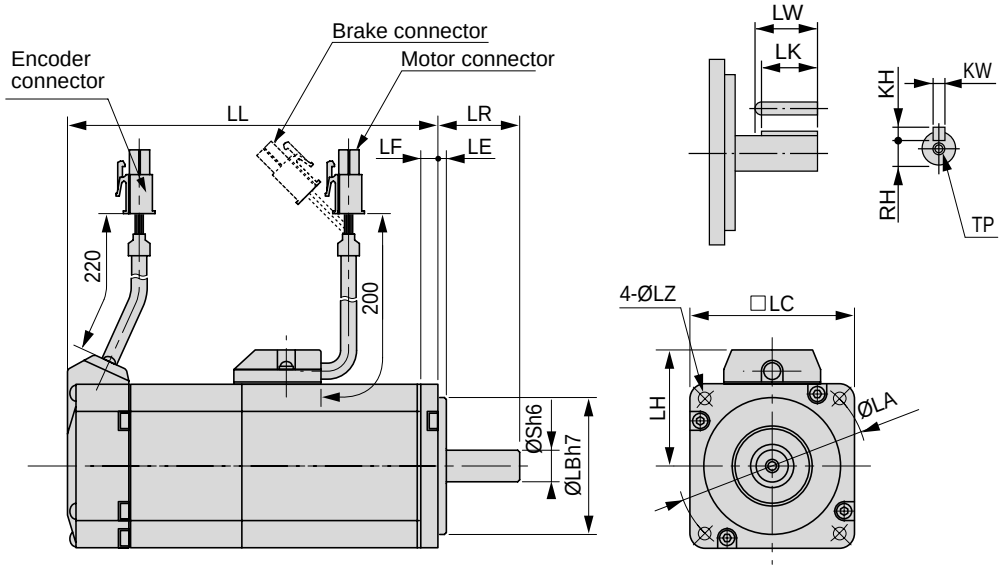

* Dimensions are subject to change without notice. Contact us or a dealer for the latest information.

		MSMD series (low inertia)					
Motor output		200W		400W		750W	
Motor model	MSMD	02 * P1 *	02 * S1 *	04 * P1 *	04 * S1 *	08 * P1 *	08 * S1 *
Rotary encoder specifications		2500P/r Incremental	17-bit Absolute/ Incremental	2500P/r Incremental	17-bit Absolute/ Incremental	2500P/r Incremental	17-bit Absolute/ Incremental
LL	Without brake	79		98.5		112	
	With brake	115.5		135		149	
LR		30		30		35	
S		11		14		19	
LA		70		70		90	
LB		50		50		70	
LC		60		60		80	
LD		—		—		—	
LE		3		3		3	
LF		6.5		6.5		8	
LG		—		—		—	
LH		43		43		53	
LN		—		—		—	
LZ		4.5		4.5		6	
Key way dimensions	LW	20		25		25	
	LK	18		22.5		22	
	KW	4h9		5h9		6h9	
	KH	4		5		6	
	RH	8.5		11		15.5	
	TP	M4 x8 (depth)		M5 x 10 (depth)		M5 x 10 (depth)	
Mass (kg)	Without brake	0.82		1.2		2.3	
	With brake	1.3		1.7		3.1	
Connector/Plug specifications		Refer to P.318, "Options".					

<Cautions>
Reduce the moment of inertia ratio if high speed response operation is required.

Dimensions (Motor)

• MQMA 100W to 400W

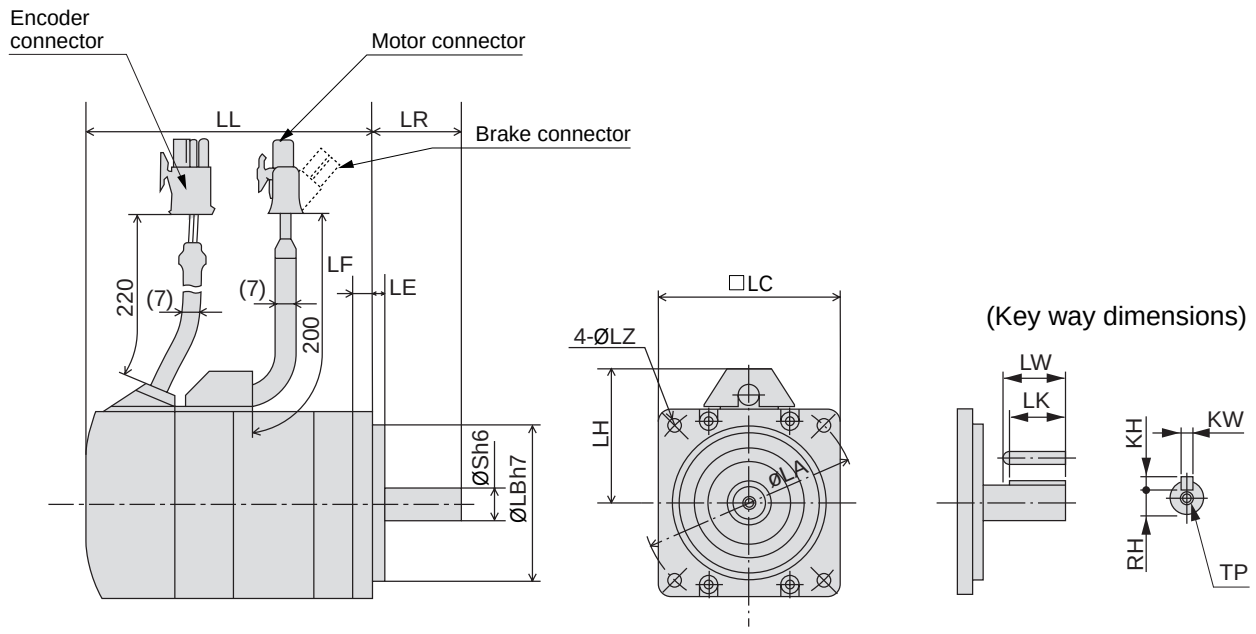

* Dimensions are subject to change without notice. Contact us or a dealer for the latest information.

		MQMA series (low inertia)					
Motor output		100W		200W		400W	
Motor model	MQMA	01 * P1 *	01 * S1 *	02 * P1 *	02 * S1 *	04 * P1 *	04 * S1 *
Rotary encoder specifications		2500P/r Incremental	17-bit Absolute/ Incremental	2500P/r Incremental	17-bit Absolute/ Incremental	2500P/r Incremental	17-bit Absolute/ Incremental
LL	Without brake	60	87	67	94	82	109
	With brake	84	111	99.5	126.5	114.5	141.5
LR		25		30		30	
S		8		11		14	
LA		70		90		90	
LB		50		70		70	
LC		60		80		80	
LD		—		—		—	
LE		3		5		5	
LF		7		8		8	
LG		—		—		—	
LH		43		53		53	
LZ		4.5		5.5		5.5	
Key way dimensions	LW	14		20		25	
	LK	12.5		18		22.5	
	KW	3h9		4h9		5h9	
	KH	3		4		5	
	RH	6.2		8.5		11	
	TP	M3 x 6(depth)		M4 x 8(depth)		M5 x 10(depth)	
Mass (kg)	Without brake	0.65	0.75	1.3	1.4	1.8	1.9
	With brake	0.90	1.00	2.0	2.1	2.5	2.6
Connector/Plug specifications		Refer to P.318, "Options".					

<Cautions>

Reduce the moment of inertia ratio if high speed response operation is required.

• MSMA 1.0kW to 2.0kW

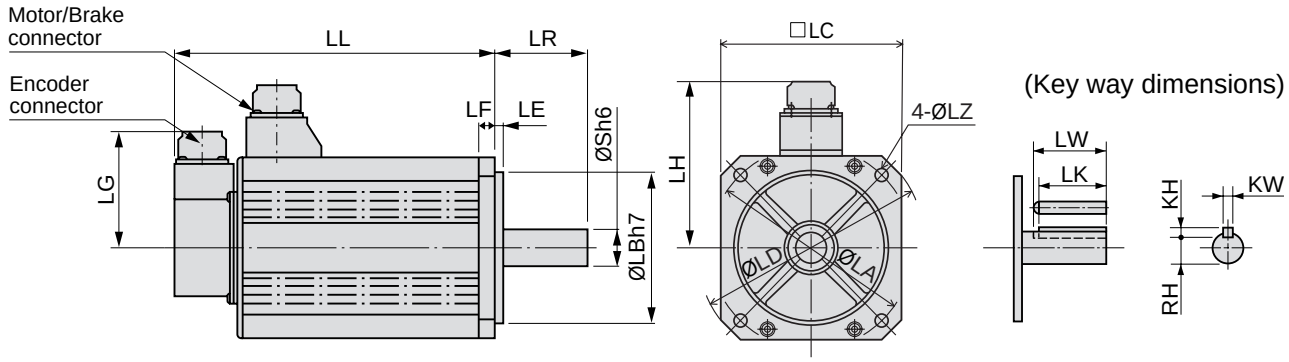

* Dimensions are subject to change without notice. Contact us or a dealer for the latest information.

		MSMA series (low inertia)					
Motor output		1.0kW		1.5kW		2.0kW	
Motor model	MSMA	10 * P1 *	10 * S1 *	15 * P1 *	15 * S1 *	20 * P1 *	20 * S1 *
Rotary encoder specifications		2500P/r Incremental	17-bit Absolute/ Incremental	2500P/r Incremental	17-bit Absolute/ Incremental	2500P/r Incremental	17-bit Absolute/ Incremental
L L	Without brake	175	175	180	180	205	205
	With brake	200	200	205	205	230	230
L R		55		55		55	
S		19		19		19	
L A		100		115		115	
L B		80		95		95	
L C		90		100		100	
L D		120		135		135	
L E		3		3		3	
L F		7		10		10	
L G		84		84		84	
L H		98		103		103	
L Z		6.6		9		9	
Key way dimensions	L W	45		45		45	
	L K	42		42		42	
	K W	6h9		6h9		6h9	
	K H	6		6		6	
	R H	15.5		15.5		15.5	
Mass (kg)	Without brake	4.5	4.5	5.1	5.1	6.5	6.5
	With brake	5.1	5.1	6.5	6.5	7.9	7.9
Connector/Plug specifications		Refer to P.312, "Options".					

<Cautions>

Reduce the moment of inertia ratio if high speed response operation is required.

Dimensions (Motor)

• MSMA 3.0kW to 5.0kW

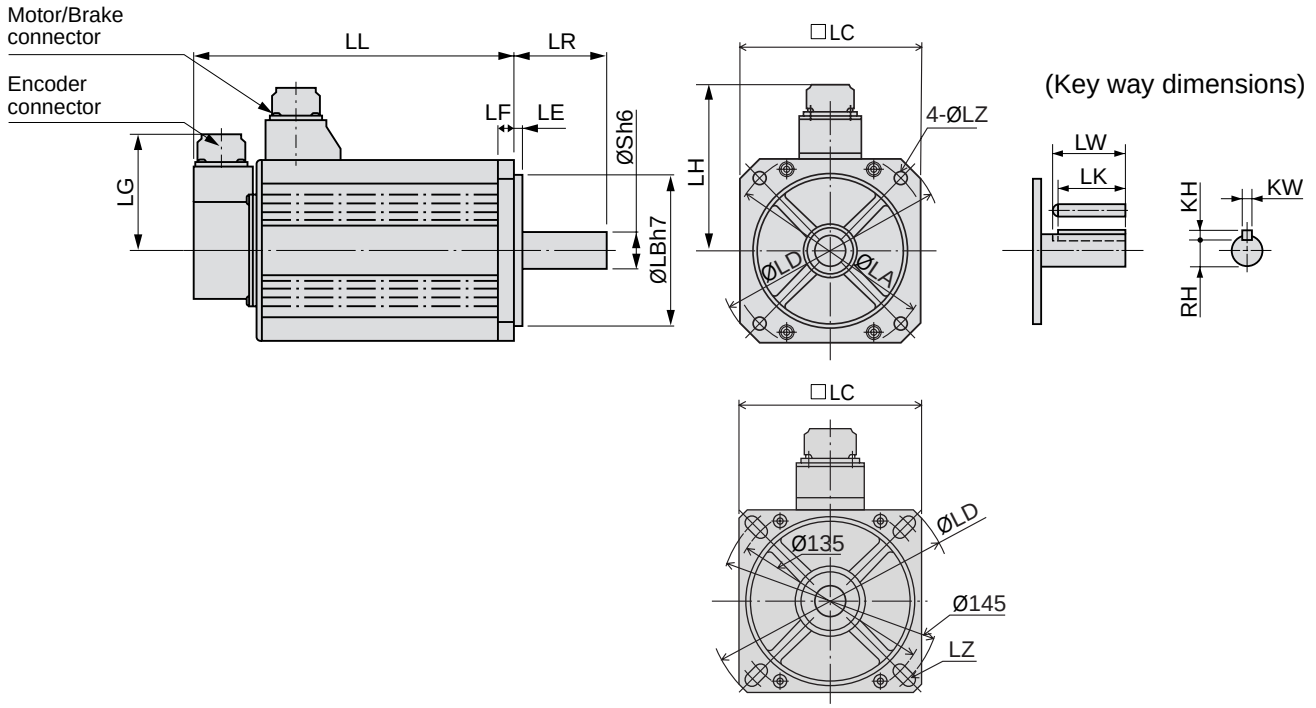

* Dimensions are subject to change without notice. Contact us or a dealer for the latest information.

		MSMA series (low inertia)					
Motor output		3.0kW		4.0kW		5.0kW	
Motor model	MSMA	30 * P1 *	30 * S1 *	40 * P1 *	40 * S1 *	50 * P1 *	50 * S1 *
Rotary encoder specifications		2500P/r Incremental	17-bit Absolute/ Incremental	2500P/r Incremental	17-bit Absolute/ Incremental	2500P/r Incremental	17-bit Absolute/ Incremental
LL	Without brake	217	217	240	240	280	280
	With brake	242	242	265	265	305	305
LR		55		65		65	
S		22		24		24	
LA		130/145 (slot)		145		145	
LB		110		110		110	
LC		120		130		130	
LD		162		165		165	
LE		3		6		6	
LF		12		12		12	
LG		84		84		84	
LH		111		118		118	
LZ		9		9		9	
Key way dimensions	LW	45		55		55	
	LK	41		51		51	
	KW	8h9		8h9		8h9	
	KH	7		7		7	
	RH	18		20		20	
Mass (kg)	Without brake	09.3	9.3	12.9	12.9	17.3	17.3
	With brake	11.0	11.0	14.8	14.8	19.2	19.2
Connector/Plug specifications		Refer to P.312, "Options".					

<Cautions>

Reduce the moment of inertia ratio if high speed response operation is required.

• MDMA 1.0kW to 1.5kW

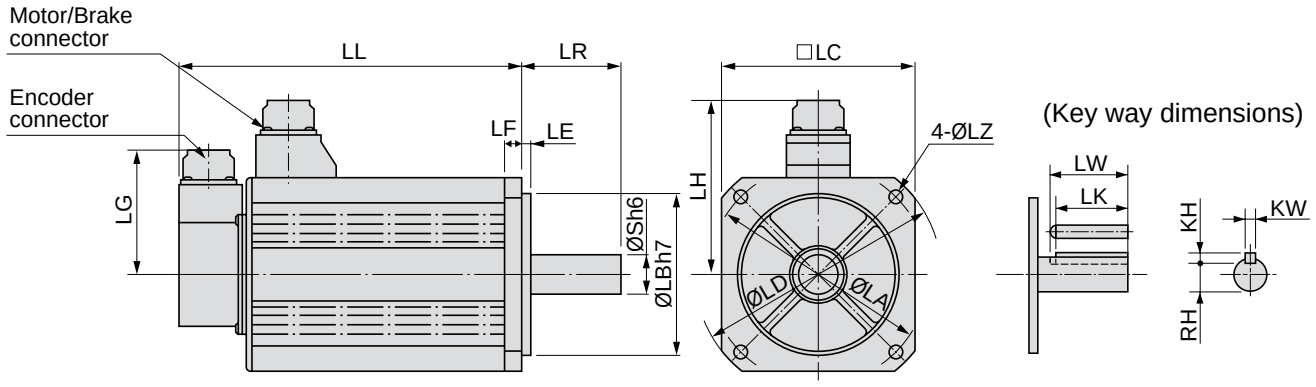

* Dimensions are subject to change without notice. Contact us or a dealer for the latest information.

		MDMA series (Middle inertia)			
Motor output		1.0kW		1.5kW	
Motor model	MDMA	10 * P1 *	10 * S1 *	15 * P1 *	15 * S1 *
Rotary encoder specifications		2500P/r Incremental	17-bit Absolute/Incremental	2500P/r Incremental	17-bit Absolute/Incremental
LL	Without brake	150	150	175	175
	With brake	175	175	200	200
LR		55		55	
S		22		22	
LA		145		145	
LB		110		110	
LC		130		130	
LD		165		165	
LE		6		6	
LF		12		12	
LG		84		84	
LH		118		118	
LZ		9		9	
Key way dimensions	LW	45		45	
	LK	41		41	
	KW	8h9		8h9	
	KH	7		7	
	RH	18		18	
Mass (kg)	Without brake	6.8	6.8	8.5	8.5
	With brake	8.7	8.7	10.1	10.1
Connector/Plug specifications		Refer to P.312, "Options".			

<Cautions>

Reduce the moment of inertia ratio if high speed response operation is required.

Dimensions (Motor)

• MDMA 2.0kW to 3.0kW

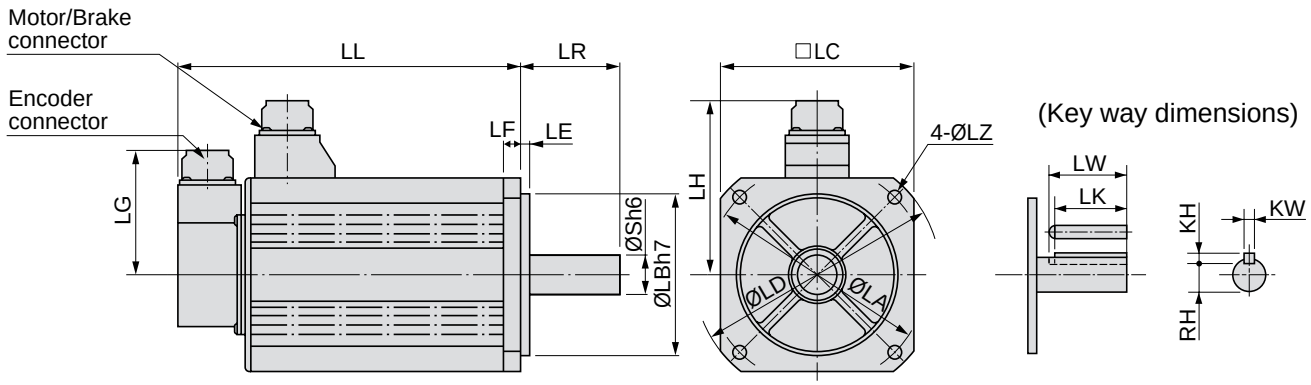

* Dimensions are subject to change without notice. Contact us or a dealer for the latest information.

		MDMA series (Middle inertia)			
Motor output		2.0kW		3.0kW	
Motor model	MDMA	20 * P1 *	20 * S1 *	30 * P1 *	30 * S1 *
Rotary encoder specifications		2500P/r Incremental	17-bit Absolute/Incremental	2500P/r Incremental	17-bit Absolute/Incremental
LL	Without brake	200	200	250	250
	With brake	225	225	275	275
LR		55		65	
S		22		24	
LA		145		145	
LB		110		110	
LC		130		130	
LD		165		165	
LE		6		6	
LF		12		12	
LG		84		84	
LH		118		118	
LZ		9		9	
Key way dimensions	LW	45		55	
	LK	41		51	
	KW	8h9		8h9	
	KH	7		7	
	RH	18		20	
Mass (kg)	Without brake	10.6	10.6	14.6	14.6
	With brake	12.5	12.5	16.5	16.5
Connector/Plug specifications		Refer to P.312, "Options".			

<Cautions>
Reduce the moment of inertia ratio if high speed response operation is required.

• MDMA 4.0kW to 5.0kW

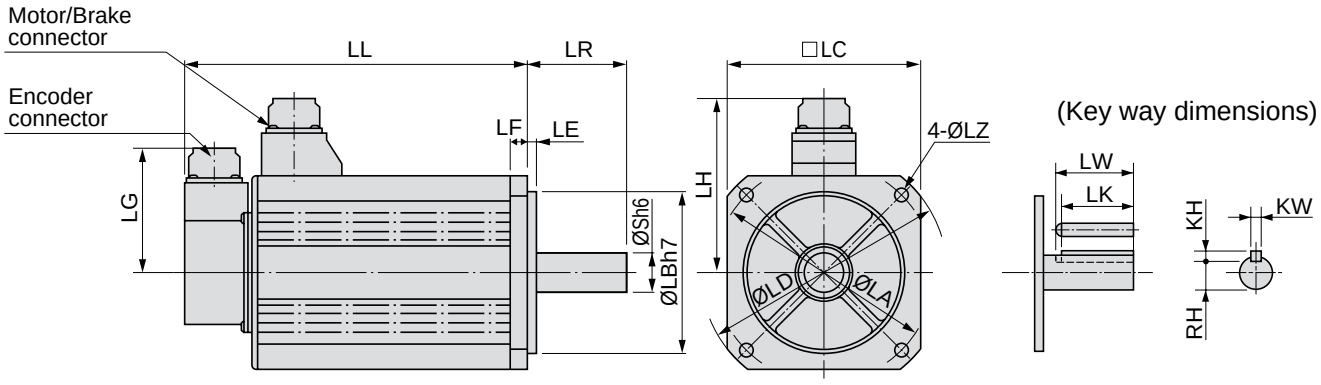

* Dimensions are subject to change without notice. Contact us or a dealer for the latest information.

		MDMA series (Middle inertia)			
Motor output		4.0kW		5.0kW	
Motor model	MDMA	40 * P1 *	40 * S1 *	50 * P1 *	50 * S1 *
Rotary encoder specifications		2500P/r Incremental	17-bit Absolute/Incremental	2500P/r Incremental	17-bit Absolute/Incremental
L L	Without brake	242	242	225	225
	With brake	267	267	250	250
L R		65		70	
S		28		35	
L A		165		200	
L B		130		114.3	
L C		150		176	
L D		190		233	
L E		3.2		3.2	
L F		18		18	
L G		84		84	
L H		128		143	
L Z		11		13.5	
Key way dimensions	L W	55		55	
	L K	51		50	
	K W	8h9		10h9	
	K H	7		8	
	R H	24		30	
Mass (kg)	Without brake	18.8	18.8	25.0	25.0
	With brake	21.3	21.3	28.5	28.5
Connector/Plug specifications		Refer to P.312, "Options".			

<Cautions>
Reduce the moment of inertia ratio if high speed response operation is required.

Dimensions (Motor)

• MGMA 900W to 2.0kW

MGMA 900W to 2.0kW

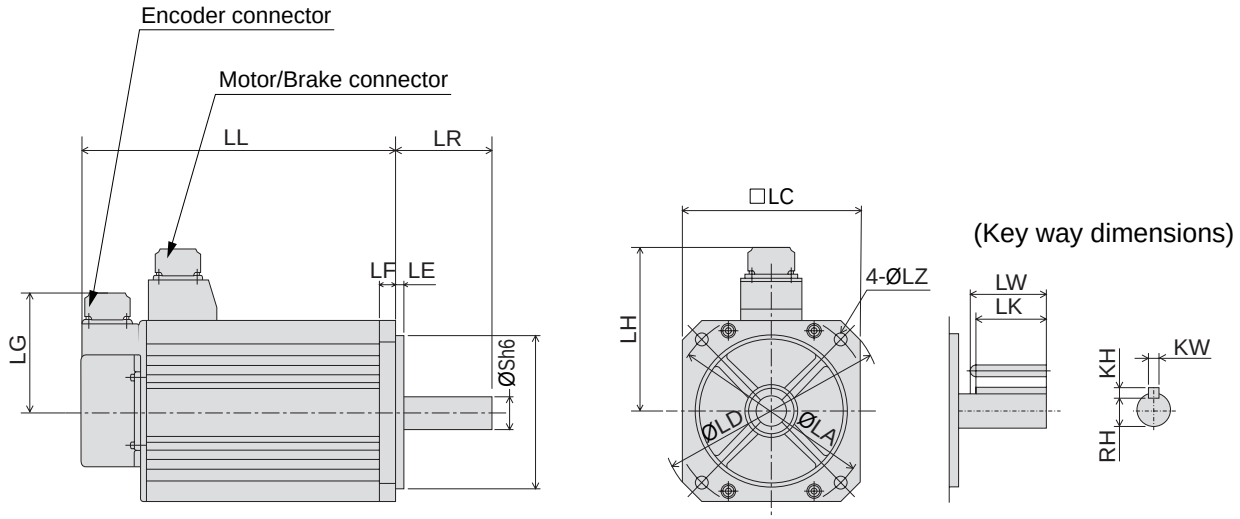

* Dimensions are subject to change without notice. Contact us or a dealer for the latest information.

		MGMA series (Middle inertia)			
Motor output		900W		2.0kW	
Motor model	MGMA	09 * P1 *	09 * S1 *	20 * P1 *	20 * S1 *
Rotary encoder specifications		2500P/r Incremental	17-bit Absolute/Incremental	2500P/r Incremental	17-bit Absolute/Incremental
LL	Without brake	175	175	182	182
	With brake	200	200	207	207
LR		70		80	
S		22		35	
LA		145		200	
LB		110		114.3	
LC		130		176	
LD		165		233	
LE		6		3.2	
LF		12		18	
LG		84		84	
LH		118		143	
LZ		9		13.5	
Key way dimensions	LW	45		55	
	LK	41		50	
	KW	8h9		10h9	
	KH	7		8	
	RH	18		30	
Mass (kg)	Without brake	8.5	8.5	17.5	17.5
	With brake	10.0	10.0	21.0	21.0
Connector/Plug specifications		Refer to P.312, "Options".			

<Cautions>
Reduce the moment of inertia ratio if high speed response operation is required.

• MGMA 3.0kW to 4.5kW

MGMA 3.0kW

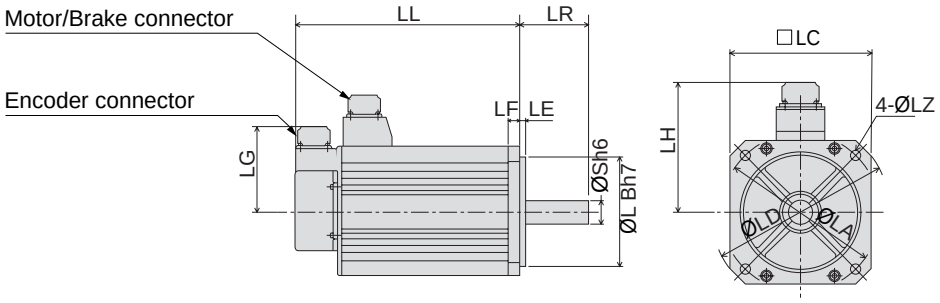

(Key way dimensions)

MGMA 4.5kW

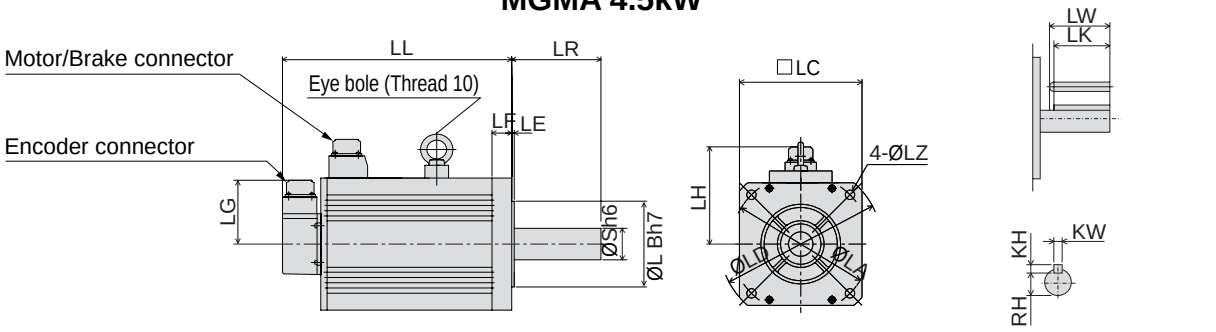

* Dimensions are subject to change without notice. Contact us or a dealer for the latest information.

		MGMA series (Middle inertia)			
Motor output		3.0kW		4.5kW	
Motor model	MGMA	30 * P1 *	30 * S1 *	45 * P1 *	45 * S1 *
Rotary encoder specifications		2500P/r Incremental	17-bit Absolute/Incremental	2500P/r Incremental	17-bit Absolute/Incremental
L L	Without brake	222	222	300.5	300.5
	With brake	271	271	337.5	337.5
L R		80		113	
S		35		42	
L A		200		200	
L B		114.3		114.3	
L C		176		176	
L D		233		233	
L E		3.2		3.2	
L F		18		24	
L G		84		84	
L H		143		143	
L Z		13.5		13.5	
Key way dimensions	L W	55		96	
	L K	50		90	
	K W	10h9		12h9	
	K H	8		8	
	R H	30		37	
Mass (kg)	Without brake	25.0	25.0	34.0	34.0
	With brake	28.5	28.5	39.5	39.5
Connector/Plug specifications		Refer to P.312, "Options".			

<Cautions>

Reduce the moment of inertia ratio if high speed response operation is required.

Dimensions (Motor)

• MFMA 400W to 1.5kW

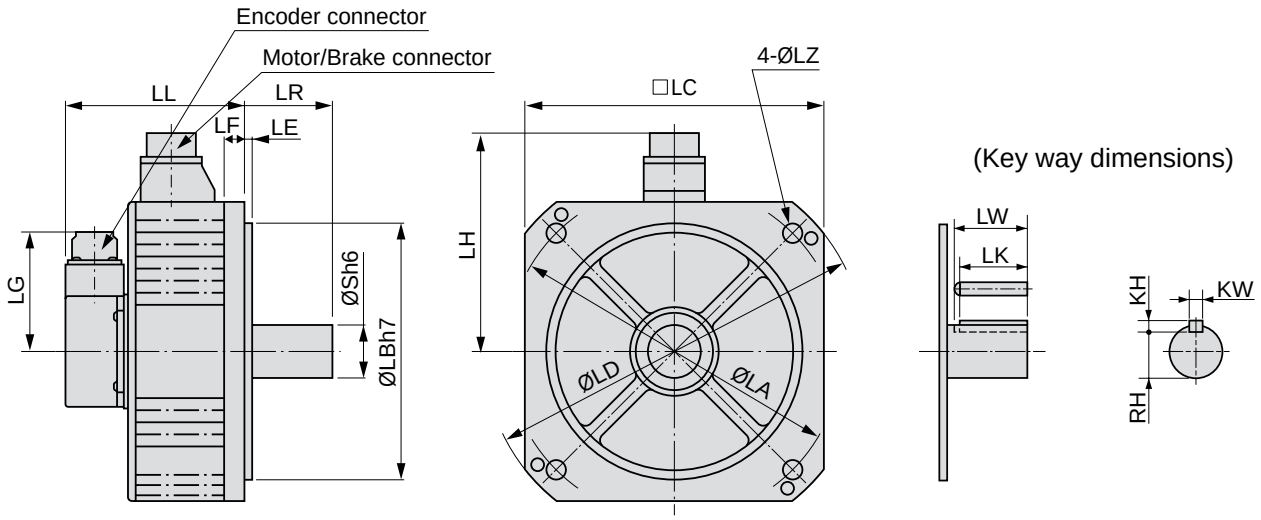

* Dimensions are subject to change without notice. Contact us or a dealer for the latest information.

		MFMA series (Middle inertia)			
Motor output		400W		1.5kW	
Motor model	MFMA	04 * P1 *	04 * S1 *	15 * P1 *	15 * S1 *
Rotary encoder specifications		2500P/r Incremental	17-bit Absolute/Incremental	2500P/r Incremental	17-bit Absolute/Incremental
LL	Without brake	120	120	145	145
	With brake	145	145	170	170
LR		55		65	
S		19		35	
LA		145		200	
LB		110		114.3	
LC		130		176	
LD		165		233	
LE		6		3.2	
LF		12		18	
LG		84		84	
LH		118		143	
LZ		9		13.5	
Key way dimensions	LW	45		55	
	LK	42		50	
	KW	6h9		10h9	
	KH	6		8	
	RH	15.5		30	
Mass (kg)	Without brake	4.7	4.7	11.0	11.0
	With brake	6.7	6.7	14.0	14.0
Connector/Plug specifications		Refer to P.312, "Options".			

<Cautions>

Reduce the moment of inertia ratio if high speed response operation is required.

• MFMA 2.5kW to 4.5kW

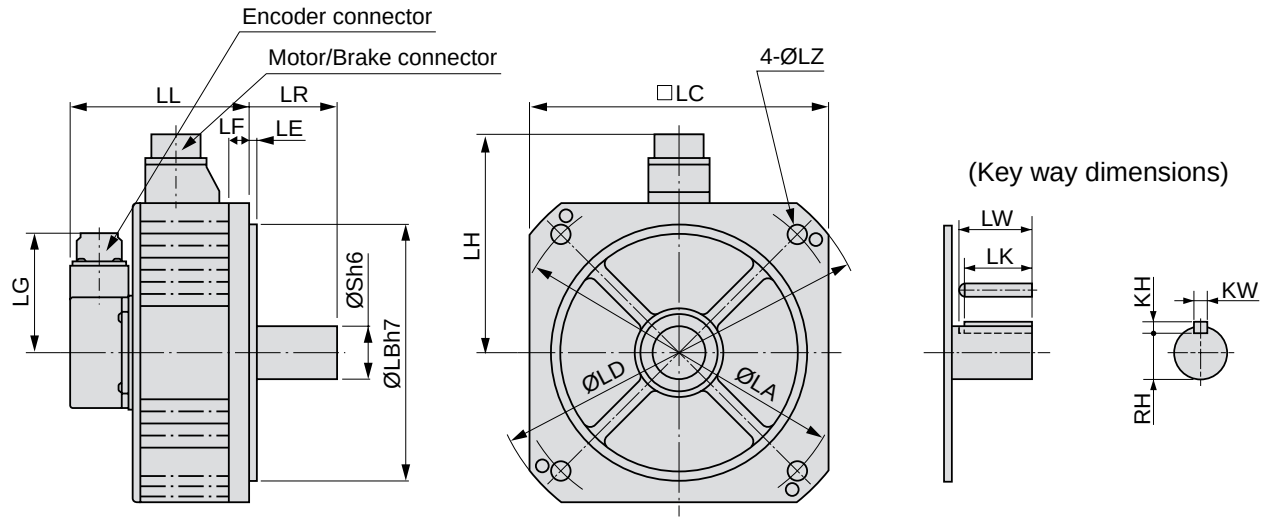

* Dimensions are subject to change without notice. Contact us or a dealer for the latest information.

		MFMA series (Middle inertia)			
Motor output		2.5kW		4.5kW	
Motor model	MFMA	25 * P1 *	25 * S1 *	45 * P1 *	45 * S1 *
Rotary encoder specifications		2500P/r Incremental	17-bit Absolute/Incremental	2500P/r Incremental	17-bit Absolute/Incremental
LL	Without brake	139	139	163	163
	With brake	166	166	194	194
LR		65		70	
S		35		35	
LA		235		235	
LB		200		200	
LC		220		220	
LD		268		268	
LE		4		4	
LF		16		16	
LG		84		84	
LH		164		164	
LZ		13.5		13.5	
Key way dimensions	LW	55		55	
	LK	50		50	
	KW	10h9		10h9	
	KH	8		8	
	RH	30		30	
Mass (kg)	Without brake	14.8	14.8	19.9	19.9
	With brake	17.5	17.5	24.3	24.3
Connector/Plug specifications		Refer to P.312, "Options".			

<Cautions>
Reduce the moment of inertia ratio if high speed response operation is required.

Dimensions (Motor)

• MHMA 500W to 1.5kW

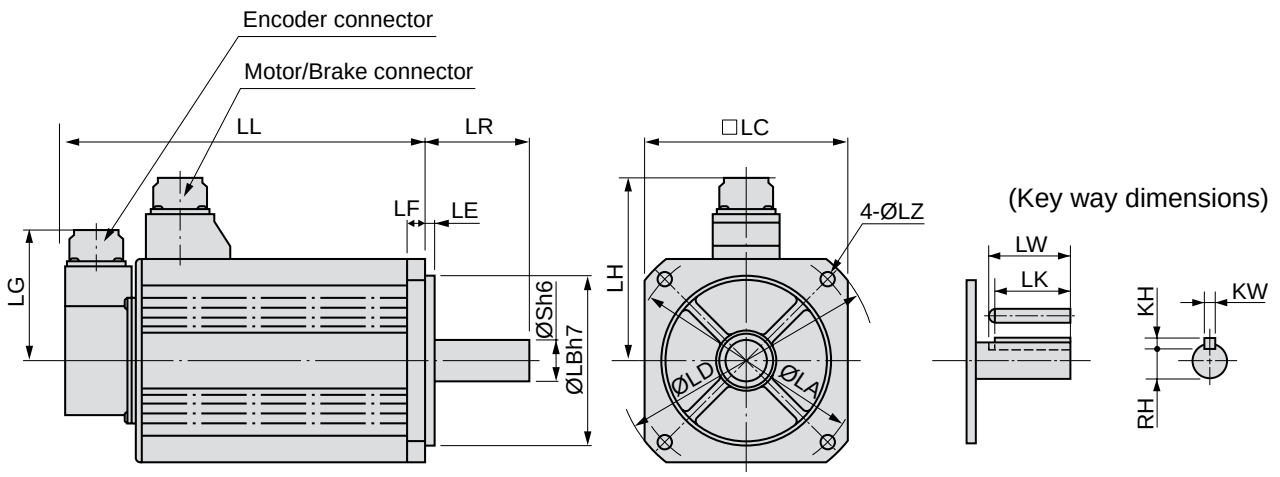

* Dimensions are subject to change without notice. Contact us or a dealer for the latest information.

		MHMA series (High inertia)					
Motor output		500W		1.0kW		1.5kW	
Motor model	MHMA	05 * P1 *	05 * S1 *	10 * P1 *	10 * S1 *	15 * P1 *	15 * S1 *
Rotary encoder specifications		2500P/r Incremental	17-bit Absolute/ Incremental	2500P/r Incremental	17-bit Absolute/ Incremental	2500P/r Incremental	17-bit Absolute/ Incremental
LL	Without brake	150	150	175	175	200	200
	With brake	175	175	200	200	225	225
LR		70		70		70	
S		22		22		22	
LA		145		145		145	
LB		110		110		110	
LC		130		130		130	
LD		165		165		165	
LE		6		6		6	
LF		12		12		12	
LG		84		84		84	
LH		118		118		118	
LZ		9		9		9	
Key way dimensions	LW	45		45		45	
	LK	41		41		41	
	KW	8h9		8h9		8h9	
	KH	7		7		7	
	RH	18		18		18	
Mass (kg)	Without brake	5.3	5.3	8.9	8.9	10.0	10.0
	With brake	6.9	6.9	9.5	9.5	11.6	11.6
Connector/Plug specifications		Refer to P.312, "Options".					

<Cautions>

Reduce the moment of inertia ratio if high speed response operation is required.

• MHMA 2.0kW to 5.0kW

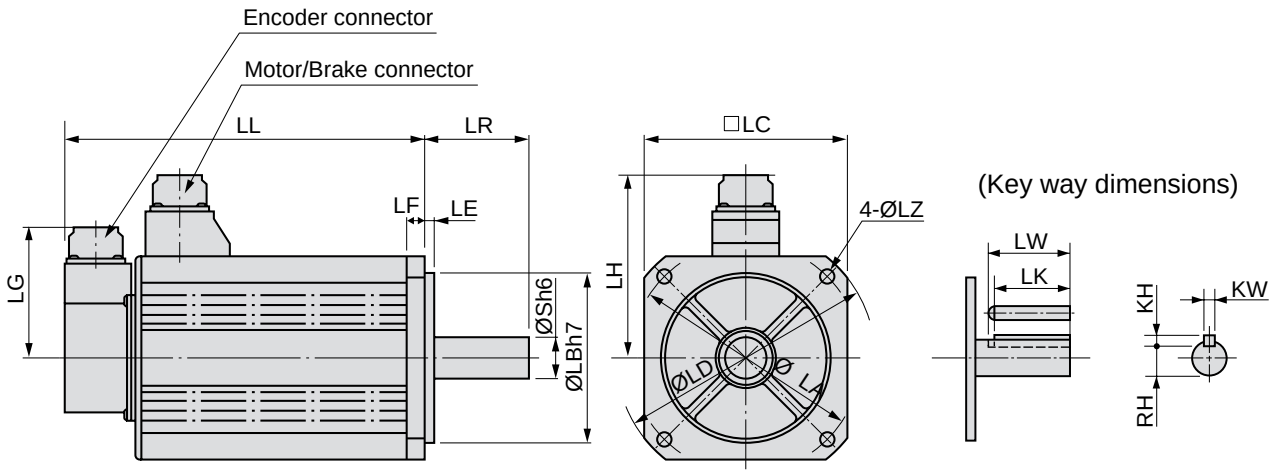

* Dimensions are subject to change without notice. Contact us or a dealer for the latest information.

		MHMA series (High inertia)							
Motor output		2.0kW		3.0kW		4.0kW		5.0kW	
Motor model	MHMA	20 * P1 *	20 * S1 *	30 * P1 *	30 * S1 *	40 * P1 *	40 * S1 *	50 * P1 *	50 * S1 *
Rotary encoder specifications		2500P/r Incremental	17-bit Absolute/ Incremental	2500P/r Incremental	17-bit Absolute/ Incremental	2500P/r Incremental	17-bit Absolute/ Incremental	2500P/r Incremental	17-bit Absolute/ Incremental
L L	Without brake	190	190	205	205	230	230	255	255
	With brake	215	215	230	230	255	255	280	280
L R		80		80		80		80	
S		35		35		35		35	
L A		200		200		200		200	
L B		114.3		114.3		114.3		114.3	
L C		176		176		176		176	
L D		233		233		233		233	
L E		3.2		3.2		3.2		3.2	
L F		18		18		18		18	
L G		84		84		84		84	
L H		143		143		143		143	
L Z		13.5		13.5		13.5		13.5	
Key way dimensions	L W	55		55		55		55	
	L K	50		50		50		50	
	K W	10h9		10h9		10h9		10h9	
	K H	8		8		8		8	
	R H	30		30		30		30	
Mass (kg)	Without brake	16.0	16.0	18.2	18.2	22.0	22.0	26.7	26.7
	With brake	19.5	19.5	21.7	21.7	25.5	25.5	30.2	30.2
Connector/Plug specifications		Refer to P.312, "Options".							

<Cautions>

Reduce the moment of inertia ratio if high speed response operation is required.

Permissible Load at Output Shaft

Radial load (P) direction

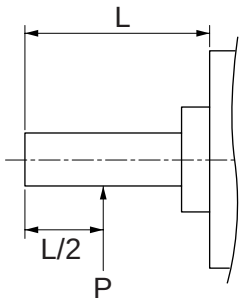

Thrust load (A and B) direction

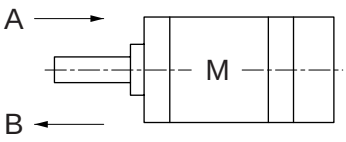

Unit : N (1kgf= 9.8N)

Motor series	Motor output	At assembly			During running	
		Radial thrust	Thrust load		Radial thrust	Thrust load A and B-direction
			A-direction	B-direction		
MSMD	50W, 100W	147	88	117.6	68.6	58.8
	200W, 400W	392	147	196	245	98
	750W	686	294	392	392	147
MSMA	1kW	686	392	490	392	147
	1.5kW to 3.0kW	980	588	686	490	196
	4.0kW to 5.0kW				784	343
MQMA	100W	147	88	117.6	68.6	58.8
	200W, 400W	392	147	196	245	98
MDMA	1.0kW to 2.0kW	980	588	686	490	196
	3.0kW				784	343
	4.0kW	1666	784	980		
	5.0kW					
MHMA	500W to 1.5kW	980	588	686	490	196
	2.0kW to 5.0kW	1666	784	980	784	343
MFMA	400W	980	588	686	392	147
	1.5kW				490	196
	2.5kW, 4.5kW	1862	686		784	294
MGMA	900W	980	588		686	196
	2.0kW	1666	784	980	1176	490
	3.0kW, 4.5kW	2058	980	1176	1470	

<Note>

When the load point varies, calculate the permissible radial load, P (N) from the distance of the load point, L (mm) from the mounting flange based on the formula of the right table, and make it smaller than the calculated result.

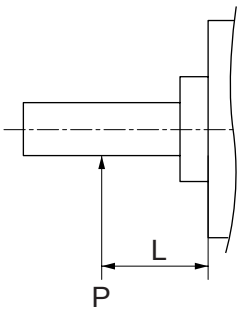

Motor series	Motor output	Formula of Load and load point relation
MSMD	50W	$P = \frac{3533}{L+39}$
	100W	$P = \frac{4905}{L+59}$
	200W	$P = \frac{14945}{L+46}$
	400W	$P = \frac{19723}{L+65.5}$
	750W	$P = \frac{37044}{L+77}$

Motor Characteristics (S-T Characteristics) [Supplement]

- Note that the motor characteristics may vary due to the existence of oil seal or brake.
- Continuous torque vs. ambient temperature characteristics have been measured with an aluminum flange attached to the motor (approx. twice as large as the motor flange).

MQMA series (100W to 400W)

With and without oil seal

• MQMA011 * 1 *

Input voltage to driver: AC100V (Dotted line represents torque at 10% less voltage.)

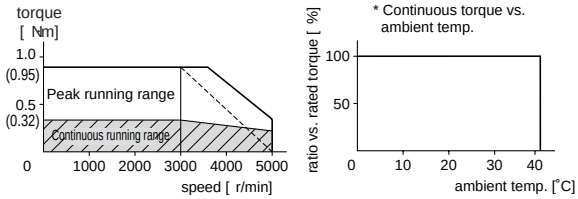

• MQMA012 * 1 *

Input voltage to driver: AC200V (Dotted line represents torque at 10% less voltage.)

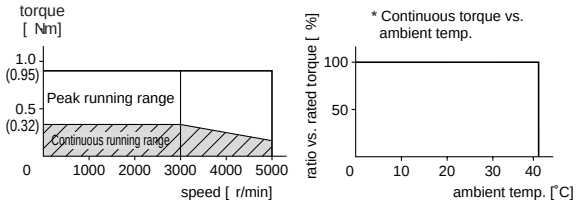

• MQMA021 * 1 *

Input voltage to driver: AC100V (Dotted line represents torque at 10% less voltage.)

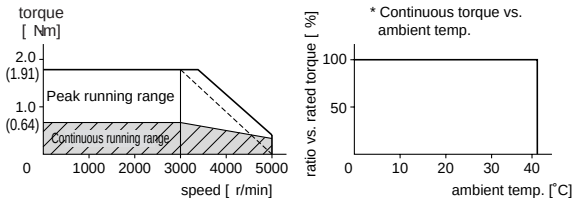

• MQMA022 * 1 *

Input voltage to driver: AC200V (Dotted line represents torque at 10% less voltage.)

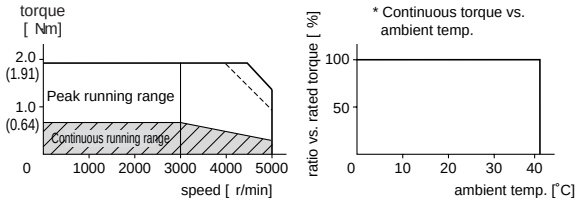

• MQMA041 * 1 *

Input voltage to driver: AC100V (Dotted line represents torque at 10% less voltage.)

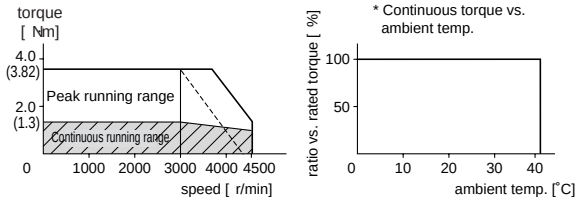

• MQMA042 * 1 *

Input voltage to driver: AC200V (Dotted line represents torque at 10% less voltage.)

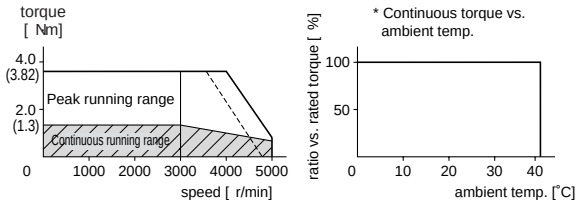

MAMA series (100W to 750W)

without oil seal

• MAMA012 * 1 *

Input voltage to driver: AC200V

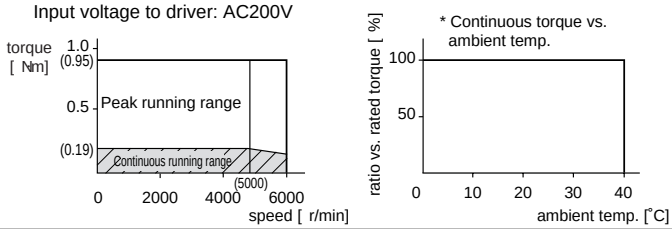

• MAMA022 * 1 *

Input voltage to driver: AC200V

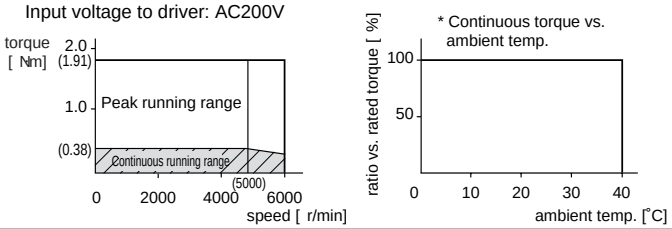

• MAMA042 * 1 *

Input voltage to driver: AC200V

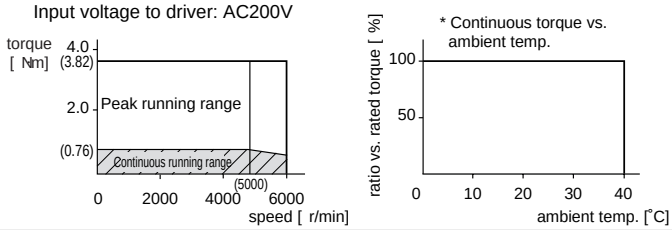

• MAMA082 * 1 *

Input voltage to driver: AC200V

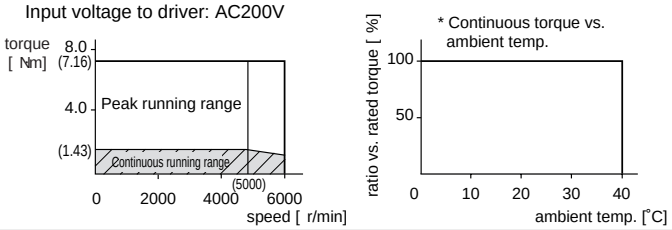

* These are subject to change. Contact us when you use these values for your machine design.

* Ratio to the rated torque at ambient temperature of 40˚C is 100% in case of without oil seal, without brake.

- When you lower the torque limit setup (Pr5E and 5F), running range at high speed might be lowered as well.

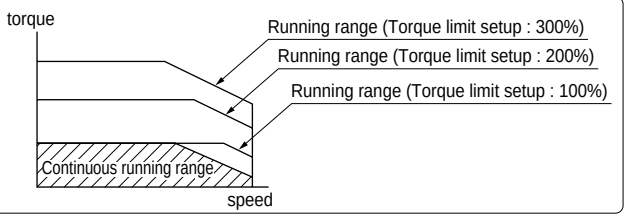

Motor Characteristics (S-T Characteristics)

MSMD series (50W to 100W)

without oil seal

• MSMD5AZ * 1 *

Input voltage to driver: AC100V/200V
(Dotted line represents torque at 10% less voltage.)

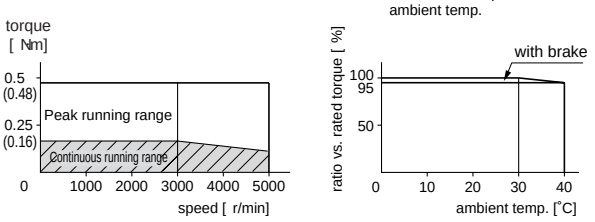

• MSMD011 * 1 *

Input voltage to driver: AC100V
(Dotted line represents torque at 10% less voltage.)

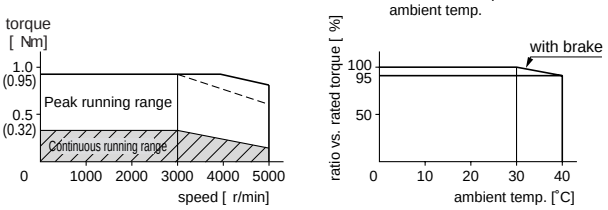

• MSMD012 * 1 *

Input voltage to driver: AC200V

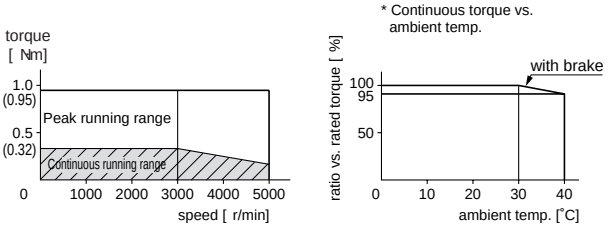

with oil seal

• MSMD5AZ * 1 *

Input voltage to driver: AC100V/200V
(Dotted line represents torque at 10% less voltage.)

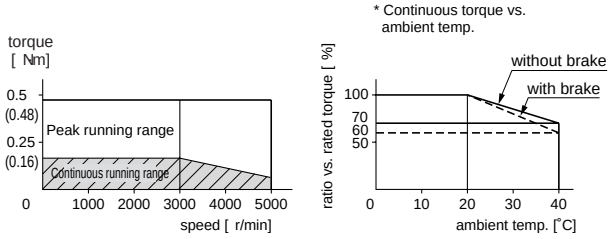

• MSMD011 * 1 *

Input voltage to driver: AC100V
(Dotted line represents torque at 10% less voltage.)

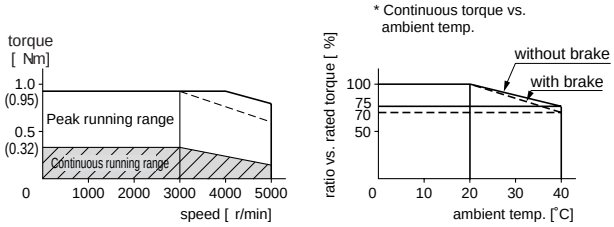

• MSMD012 * 1 *

Input voltage to driver: AC200V

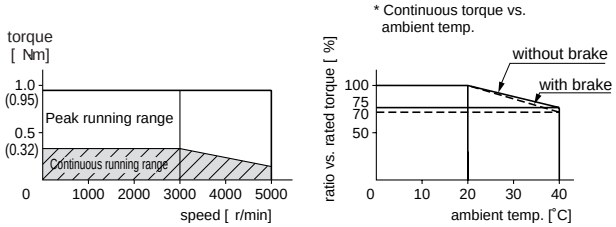

* These are subject to change. Contact us when you use these values for your machine design.
* Ratio to the rated torque at ambient temperature of 40˚C is 100% in case of without oil seal, without brake.

• When you lower the torque limit setup (Pr5E and 5F), running range at high speed might be lowered as well.

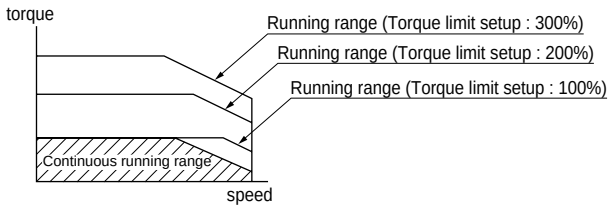

MSMD series (200W to 750W)

without oil seal

• MSMD021 * 1 *

Input voltage to driver: AC100V
(Dotted line represents torque at 10% less voltage.)

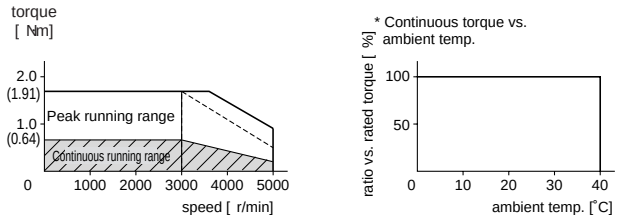

• MSMD022 * 1 *

Input voltage to driver: AC200V
(Dotted line represents torque at 10% less voltage.)

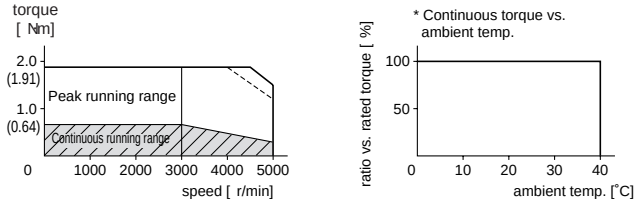

• MSMD041 * 1 *

Input voltage to driver: AC100V
(Dotted line represents torque at 10% less voltage.)

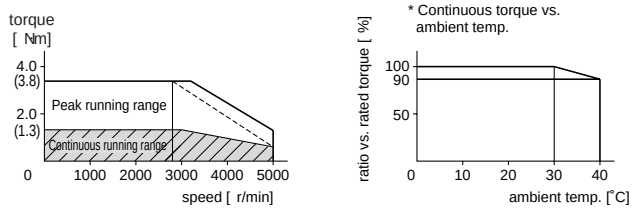

• MSMD042 * 1 *

Input voltage to driver: AC200V
(Dotted line represents torque at 10% less voltage.)

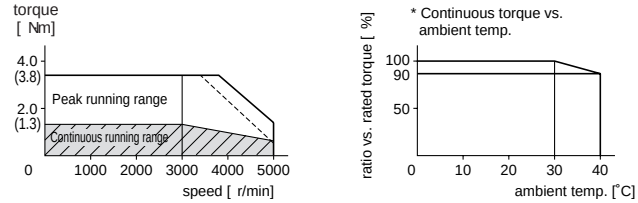

• MSMD082 * 1 *

Input voltage to driver: AC200V
(Dotted line represents torque at 10% less voltage.)

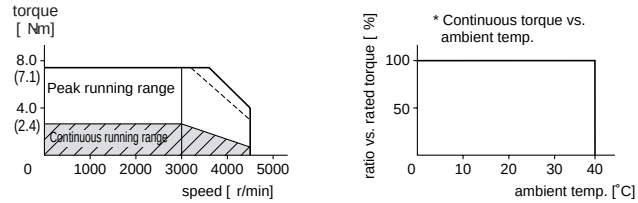

With oil seal

• MSMD021 * 1 *

Input voltage to driver: AC100V
(Dotted line represents torque at 10% less voltage.)

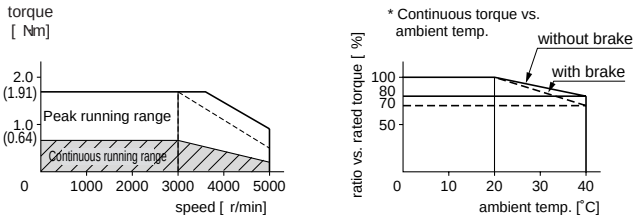

• MSMD022 * 1 *

Input voltage to driver: AC200V
(Dotted line represents torque at 10% less voltage.)

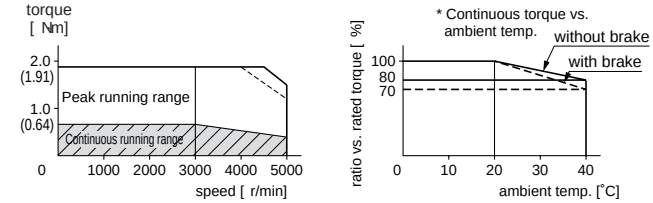

• MSMD041 * 1 *

Input voltage to driver: AC100V
(Dotted line represents torque at 10% less voltage.)

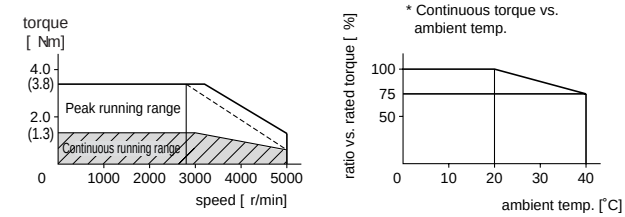

• MSMD042 * 1 *

Input voltage to driver: AC200V
(Dotted line represents torque at 10% less voltage.)

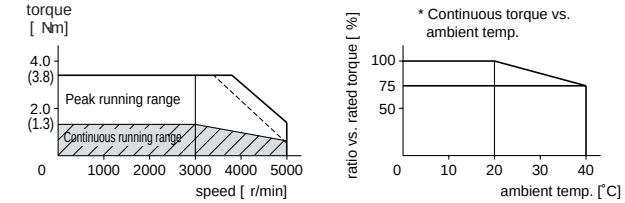

• MSMD082 * 1 *

Input voltage to driver: AC200V
(Dotted line represents torque at 10% less voltage.)

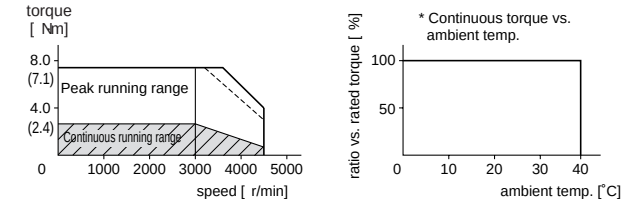

* These are subject to change. Contact us when you use these values for your machine design.

Motor Characteristics (S-T Characteristics)

MSMA series (1.0kW to 5.0kW)

With oil seal

• MSMA102 * 1 *

Input voltage to driver: AC200V
(Dotted line represents torque at 10% less voltage.)

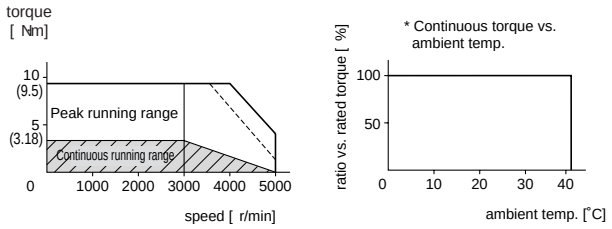

• MSMA152 * 1 *

Input voltage to driver: AC200V
(Dotted line represents torque at 10% less voltage.)

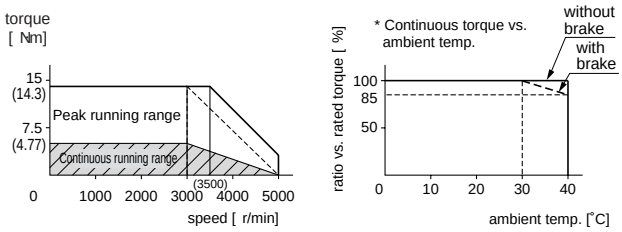

• MSMA202 * 1 *

Input voltage to driver: AC200V
(Dotted line represents torque at 10% less voltage.)

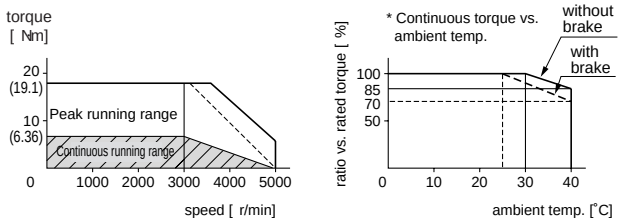

• MSMA302 * 1 *

Input voltage to driver: AC200V
(Dotted line represents torque at 10% less voltage.)

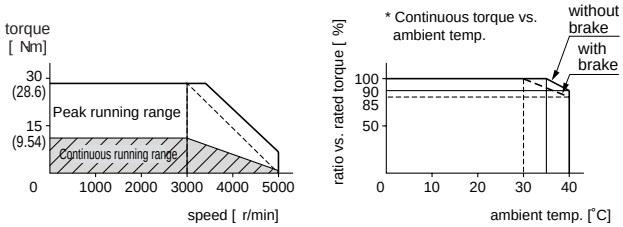

• MSMA402 * 1 *

Input voltage to driver: AC200V
(Dotted line represents torque at 10% less voltage.)

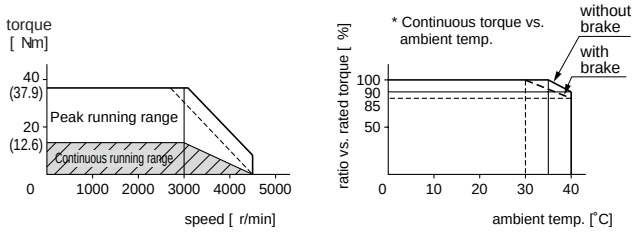

• MSMA502 * 1 *

Input voltage to driver: AC200V
(Dotted line represents torque at 10% less voltage.)

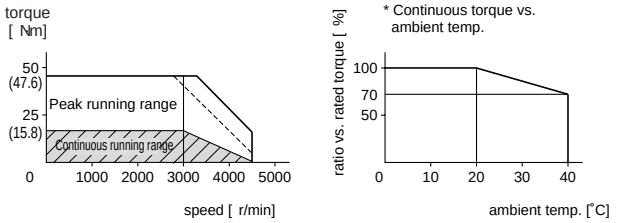

MDMA series (1.0kW to 2.0kW)

With oil seal

• MDMA102 * 1 *

Input voltage to driver: AC200V
(Dotted line represents torque at 10% less voltage.)

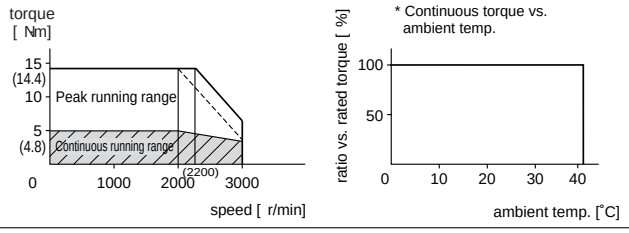

• MDMA152 * 1 *

Input voltage to driver: AC200V
(Dotted line represents torque at 10% less voltage.)

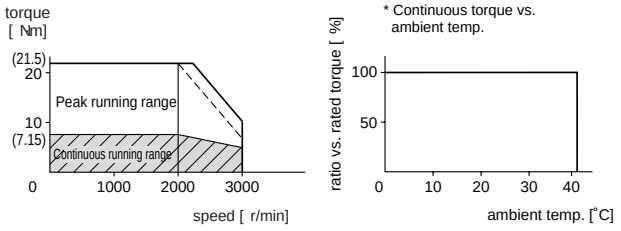

• MDMA202 * 1 *

Input voltage to driver: AC200V
(Dotted line represents torque at 10% less voltage.)

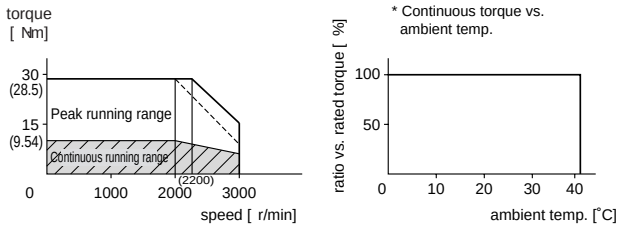

* These are subject to change. Contact us when you use these values for your machine design.

MDMA series (3.0kW to 5.0kW)

With oil seal

• MDMA302 * 1 *

Input voltage to driver: AC200V
(Dotted line represents torque at 10% less voltage.)

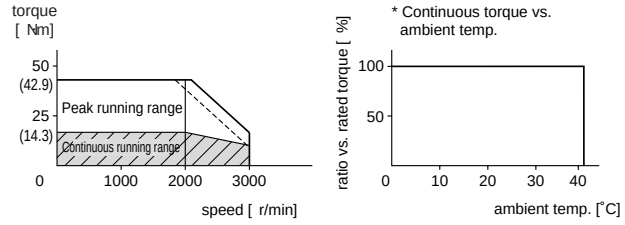

• MDMA402 * 1 *

Input voltage to driver: AC200V
(Dotted line represents torque at 10% less voltage.)

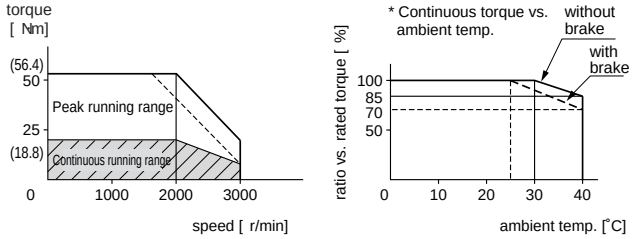

• MDMA502 * 1 *

Input voltage to driver: AC200V
(Dotted line represents torque at 10% less voltage.)

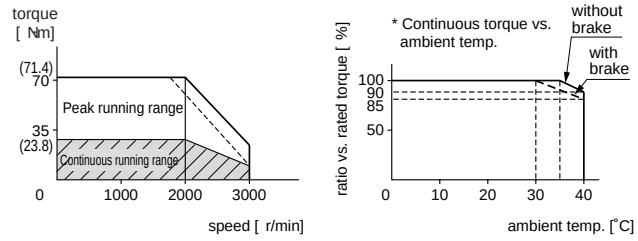

MFMA series (400W to 4.5kW)

With oil seal

• MFMA042 * 1 *

Input voltage to driver: AC200V
(Dotted line represents torque at 10% less voltage.)

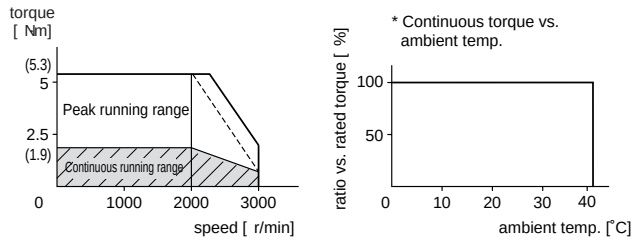

• MFMA152 * 1 *

Input voltage to driver: AC200V
(Dotted line represents torque at 10% less voltage.)

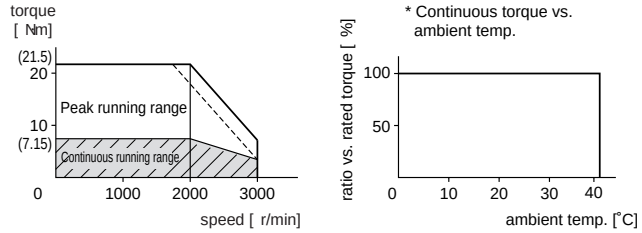

• MFMA252 * 1 *

Input voltage to driver: AC200V
(Dotted line represents torque at 10% less voltage.)

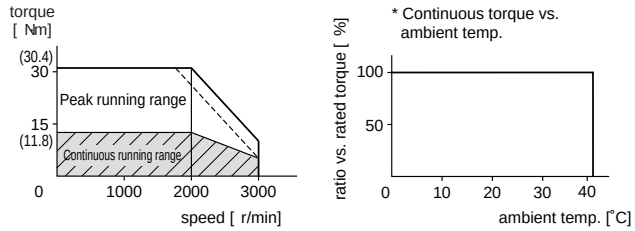

• MFMA452 * 1 *

Input voltage to driver: AC200V
(Dotted line represents torque at 10% less voltage.)

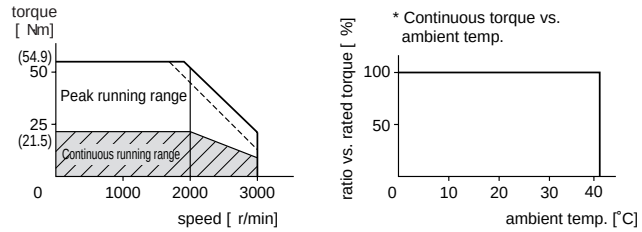

* These are subject to change. Contact us when you use these values for your machine design.

• When you lower the torque limit setup (Pr5E and 5F), running range at high speed might be lowered as well.

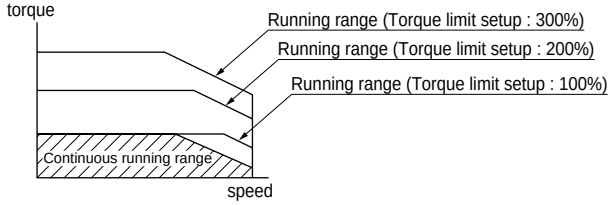

Motor Characteristics (S-T Characteristics)

MHMA series (500W to 5.0kW)

With oil seal

• MHMA052 * 1 *

Input voltage to driver: AC200V

(Dotted line represents torque at 10% less voltage.)

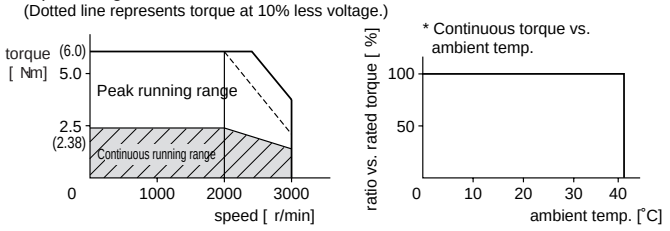

• MHMA102 * 1 *

Input voltage to driver: AC200V

(Dotted line represents torque at 10% less voltage.)

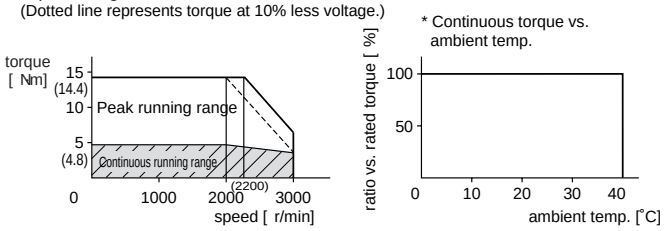

• MHMA152 * 1 *

Input voltage to driver: AC200V

(Dotted line represents torque at 10% less voltage.)

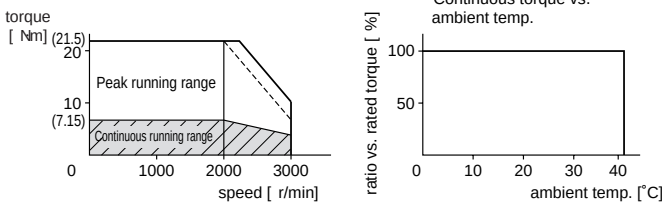

• MHMA202 * 1 *

Input voltage to driver: AC200V

(Dotted line represents torque at 10% less voltage.)

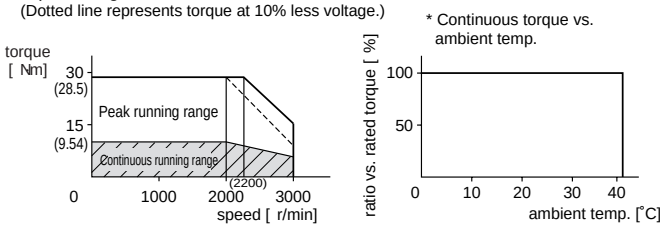

• MHMA302 * 1 *

Input voltage to driver: AC200V

(Dotted line represents torque at 10% less voltage.)

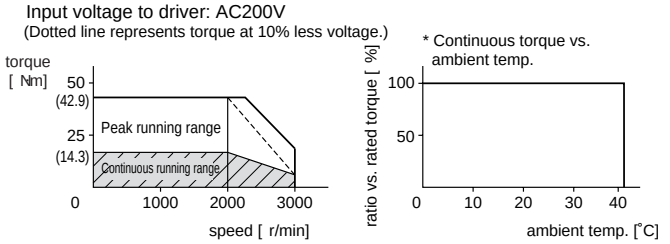

• MHMA402 * 1 *

Input voltage to driver: AC200V

(Dotted line represents torque at 10% less voltage.)

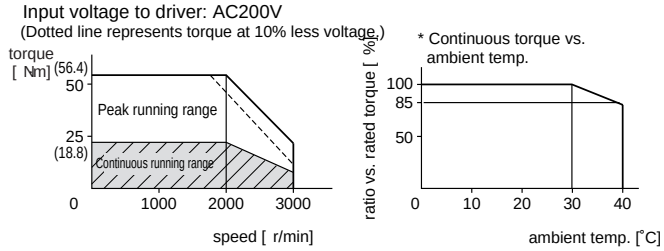

• MHMA502 * 1 *

Input voltage to driver: AC200V

(Dotted line represents torque at 10% less voltage.)

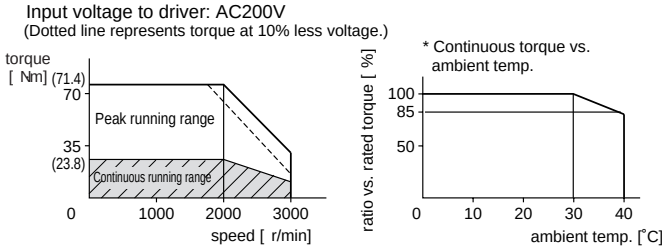

• When you lower the torque limit setup (Pr5E and 5F), running range at high speed might be lowered as well.

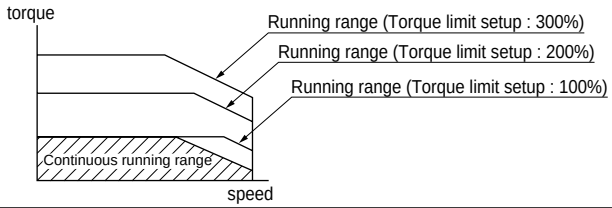

MGMA series (900W to 4.5kW)

With oil seal

• MGMA092 * 1 *

Input voltage to driver: AC200V

(Dotted line represents torque at 10% less voltage.)

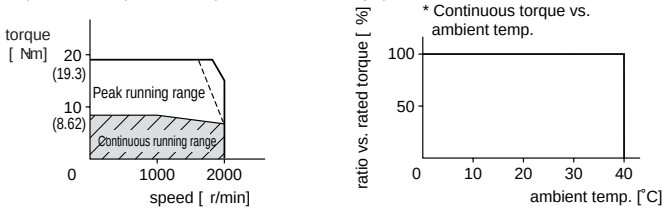

• MGMA202 * 1 *

Input voltage to driver: AC200V

(Dotted line represents torque at 10% less voltage.)

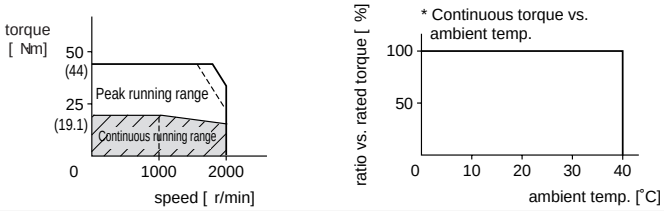

• MGMA302 * 1 *

Input voltage to driver: AC200V

(Dotted line represents torque at 10% less voltage.)

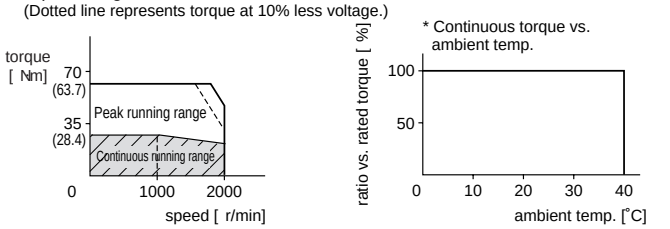

• MGMA452 * 1 *

Input voltage to driver: AC200V

(Dotted line represents torque at 10% less voltage.)

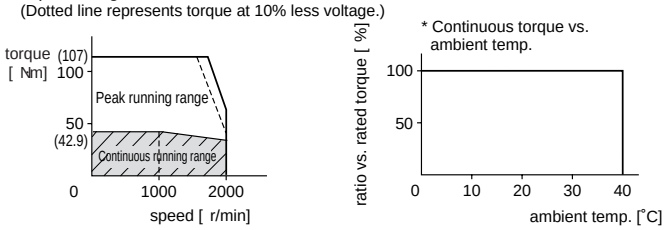

* These are subject to change. Contact us when you use these values for your machine design.

Model No. of Motor with Gear Reduce

Model Designation

M S M D 0 1 1 P 3 1 N
1~4 5~6 7 8 9 10

Symbol	Type
MSMD	Low inertia

Motor rated output

Symbol	Output
01	100W
02	200W
04	400W
08	750W

Voltage specifications

Symbol	Specifications
1	100V
2	200V

Reduction ratio

Symbol	Reduction ratio
1N	1/5
2N	1/9
3N	1/15
4N	1/25

Rotary encoder specifications

Symbol	Specifications			
	Format	Pulse count	Resolution	Wire count
P	Incremental	2500P/r	10,000	5-wire
S	Absolute/Incremental common	17bit	131,072	7-wire

Motor structure

Symbol	Holding brake		Shaft
	Without	With	Key way
3	●		●
4		●	●

Combination of Driver and Motor with Gear Reducer

This driver is designed to be used in the combination with the specified motor model.
Check the series name, rated output and voltage specifications and the encoder specifications of the applicable motor.

Incremental Specifications, 2500P/r

<Remark>

Do not use the driver and the motor with gear reducer in other combinations than the one in the following table.

• Incremental specifications, 2500P/r

	Applicable motor with gear reducer					Applicable driver	
Power supply	Rated output of motor	Reduction ratio of 1/5	Reduction ratio of 1/9	Reduction ratio of 1/15	Reduction ratio of 1/25	Model No. of driver	Frame of driver
Single phase, 100V	100W	MSMD011P * 1N	MSMD011P * 2N	MSMD011P * 3N	MSMD011P * 4N	MADDT1107	A-frame
	200W	MSMD021P * 1N	MSMD021P * 2N	MSMD021P * 3N	MSMD021P * 3N	MBDDT2110	B-frame
	400W	MSMD041P * 1N	MSMD041P * 2N	MSMD041P * 3N	MSMD041P * 4N	MCDDT3120	C-frame
Single phase, 200V	100W	MSMD012P * 1N	MSMD012P * 2N	MSMD012P * 3N	MSMD012P * 4N	MADDT1205	A-frame
	200W	MSMD022P * 1N	MSMD022P * 2N	MSMD022P * 3N	MSMD022P * 3N	MADDT1207	
	400W	MSMD042P * 1N	MSMD042P * 2N	MSMD042P * 3N	MSMD042P * 4N	MBDDT2210	B-frame
	750W	MSMD082P * 1N	MSMD082P * 2N	MSMD082P * 3N	MSMD082P * 4N	MCDDT3520	C-frame
3-phase, 200V	750W	MSMD082P * 1N	MSMD082P * 2N	MSMD082P * 3N	MSMD082P * 4N	MCDDT3520	C-frame

• Absolute/Incremental specifications, 17bit

	Applicable motor with gear reducer					Applicable driver	
Power supply	Rated output of motor	Reduction ratio of 1/5	Reduction ratio of 1/9	Reduction ratio of 1/15	Reduction ratio of 1/25	Model No. of driver	Frame of driver
Single phase, 100V	100W	MSMD011S * 1N	MSMD011S * 2N	MSMD011S * 3N	MSMD011S * 4N	MADDT1107	A-frame
	200W	MSMD021S * 1N	MSMD021S * 2N	MSMD021S * 3N	MSMD021S * 3N	MBDDT2110	B-frame
	400W	MSMD041S * 1N	MSMD041S * 2N	MSMD041S * 3N	MSMD041S * 4N	MCDDT3120	C-frame
Single phase, 200V	100W	MSMD012S * 1N	MSMD012S * 2N	MSMD012S * 3N	MSMD012S * 4N	MADDT1205	A-frame
	200W	MSMD022S * 1N	MSMD022S * 2N	MSMD022S * 3N	MSMD022S * 3N	MADDT1207	
	400W	MSMD042S * 1N	MSMD042S * 2N	MSMD042S * 3N	MSMD042S * 4N	MBDDT2210	B-frame
	750W	MSMD082S * 1N	MSMD082S * 2N	MSMD082S * 3N	MSMD082S * 4N	MCDDT3520	C-frame
3-phase, 200V	750W	MSMD082S * 1N	MSMD082S * 2N	MSMD082S * 3N	MSMD082S * 4N	MCDDT3520	C-frame

<Note>

• "*" of the model No. represents the structure of the motor.

Dimensions/Motor with Gear Reducer

Motor with Gear Reducer

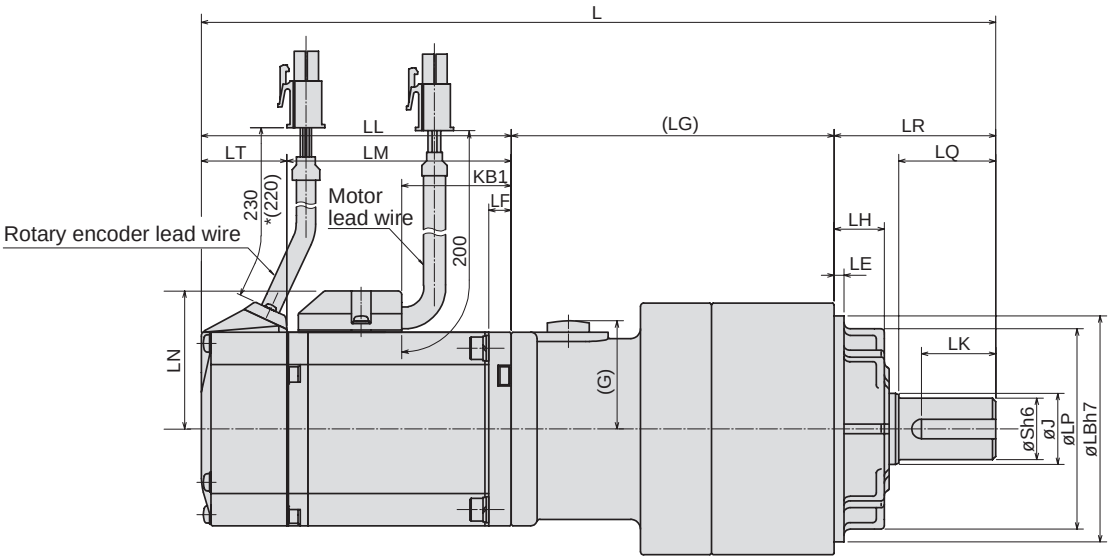

(unit : mm)

		Model	Motor output	Reduction rati0	L	LL	LM	LT	KB1	LF	LR	LQ	LB	S	LP	LH	J	(LG)	LE	(G)
MSMD	Without brake	MSMD01 * P31N	100W	1/5	191.5	92	68	24	40.8	6	32	20	50	12	45	10	14	67.5	3	25
		MSMD01 * P32N		1/9																
		MSMD01 * P33N		1/15	202													78		
		MSMD01 * P34N		1/25	234						50	30	70	19	62	17	22	92		
		MSMD02 * P31N	200W	1/5	183.5	79	56.5	22.5	22.5	6.5	32	20	50	12	45	10	14	72.5		34
		MSMD02 * P32N		1/9	218.5						50	30	70	19	62	17	22	89.5		
		MSMD02 * P33N		1/15	229													100		
		MSMD02 * P34N		1/25																
		MSMD04 * P31N	400W	1/5	238	98.5	76		42									89.5		
		MSMD04 * P32N		1/9																
		MSMD04 * P33N		1/15	248.5													100		
		MSMD04 * P34N		1/25	263.5						61	40	90	24	75	18	28	104	5	
		MSMD082P31N	750W	1/5	255.5	112	86.5	25.5	52.2	8	50	30	70	19	62	17	22	93.5	3	
		MSMD082P32N		1/9	270.5						61	40	90	24	75	18	28	97.5	5	
		MSMD082P33N		1/15	283													110		
		MSMD082P34N		1/25																
	With brake	MSMD01 * P41N	100W	1/5	221.5	122	98	24	40.8	6	32	20	50	12	45	10	14	67.5	3	25
		MSMD01 * P42N		1/9																
		MSMD01 * P43N		1/15	232													78		
		MSMD01 * P44N		1/25	264						50	30	70	19	62	17	22	92		
		MSMD02 * P41N	200W	1/5	220	115.5	93	22.5	22.5	6.5	32	20	50	12	45	10	14	72.5		34
		MSMD02 * P42N		1/9	255						50	30	70	19	62	17	22	89.5		
		MSMD02 * P43N		1/15	265.5													100		
		MSMD02 * P44N		1/25																
		MSMD04 * P41N	400W	1/5	274.5	135	112.5		42									89.5		
		MSMD04 * P42N		1/9																
		MSMD04 * P43N		1/15	285													100		
		MSMD04 * P44N		1/25	300						61	40	90	24	75	18	28	104	5	
		MSMD082P41N	750W	1/5	292.5	149	123.5	25.5	52.2	8	50	30	70	19	62	17	22	93.5	3	
		MSMD082P42N		1/9	307.5						61	40	90	24	75	18	28	97.5	5	
		MSMD082P43N		1/15	320													110		
		MSMD082P44N		1/25																

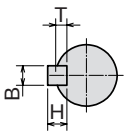

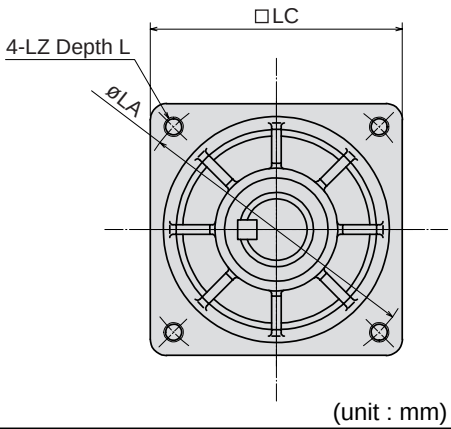

(unit : mm)

		LC	LA	LZ	LD	Kew way dimensions (B x H x LK)	T	LN	Mass (kg)	Moment of inertia (x 10^{-4}kg·m^2)
MSMD	Without brake	52	60	M5	12	4 x 4 x 16	2.5	32	1.02	0.0910
										0.0853
									1.17	0.0860
		78	90	M6	20	6 x 6 x 22	3.5		2.17	0.0885
		52	60	M5	12	4 x 4 x 16	2.5	43	1.54	0.258
		78	90	M6	20	6 x 6 x 22	3.5		2.52	0.408
										0.440
										0.428
									2.9	0.623
										0.528
									3.3	0.560
		98	115	M8		8 x 7 x 30	4		4.4	0.560
		78	90	M6		6 x 6 x 22	3.5	53		1.583
		98	115	M8		8 x 7 x 30	4		5.7	1.520
									6.1	1.570
										1.520
	With brake	52	60	M5	12	4 x 4 x 16	2.5	32	1.23	0.0940
										0.0883
									1.38	0.0890
		78	90	M6	20	6 x 6 x 22	3.5		2.38	0.0915
		52	60	M5	12	4 x 4 x 16	2.5	43	2.02	0.278
		78	90	M6	20	6 x 6 x 22	3.5		3.00	0.428
										0.460
										0.448
									3.4	0.643
										0.548
									3.8	0.580
		98	115	M8		8 x 7 x 30	4		4.9	0.580
		78	90	M6		6 x 6 x 22	3.5	53	5.2	1.683
		98	115	M8		8 x 7 x 30	4		6.5	1.620
									6.9	1.670
										1.620

Moment of inertia is combined value of the motor and the gear reducer, and converted to that of the motor shaft .

Permissible Load at Output Shaft

Radial load (P) direction

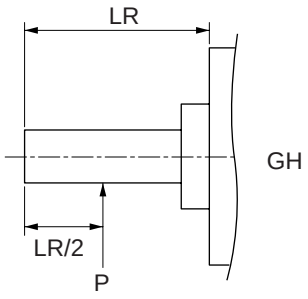

Thrust load (A and B) direction

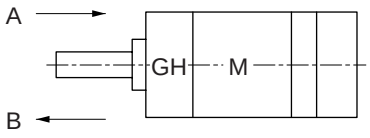

Unit : N (1kgf= 9.8N)

Motor output	Motor output	Permissible load at shaft	
		Radial thrust	Thrust load A and B-direction
100W	1/5	490	245
	1/9	588	294
	1/15	784	392
	1/25	1670	833
200W	1/5	490	245
	1/9	1180	588
	1/15	1470	735
	1/25	1670	833
400W	1/5	980	490
	1/9	1180	588
	1/15	1470	735
	1/25	2060	1030
750W	1/5	980	490
	1/9	1470	735
	1/15	1760	882
	1/25	2650	1320

Remarks on installation

(1) Do not hit the output shaft of the gear reducer when attaching a pulley or sprocket to it. Or it may cause an abnormal noise.
(2) Apply the load of the pulley or the sprocket to as close to the base of the output shaft as possible.
(3) Check the mounting accuracy and strength of the stiff joint, when you use it.
(4) The encoder is built in to the motor. If an excessive impact is applied to the motor while assembling it to the machine, the encoder might be damaged. Pay an extra attention at assembly.

Characteristics of Motor with Gear Reducer [Supplement]

Supply voltage to driver	Motor output \ Reduction ratio	1/5	1/9	1/15	1/25
100V	100W	MSMD011 * * 1N 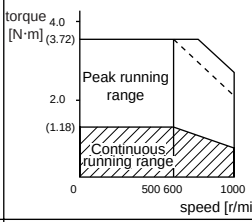	MSMD011 * * 2N 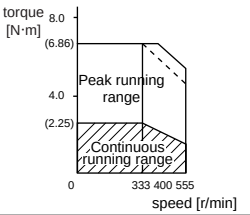	MSMD011 * * 3N 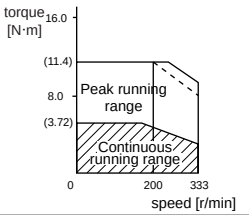	MSMD011 * * 4N 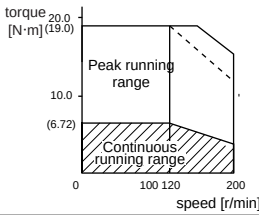
	200W	MSMD021 * * 1N 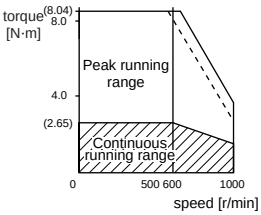	MSMD021 * * 2N 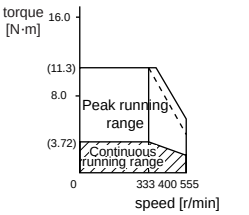	MSMD021 * * 3N 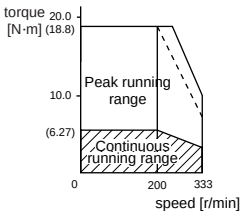	MSMD021 * * 4N 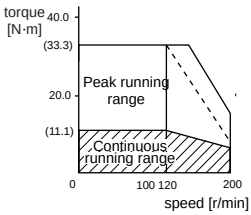
	400W	MSMD041 * * 1N 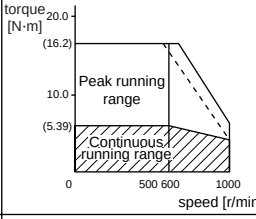	MSMD041 * * 2N 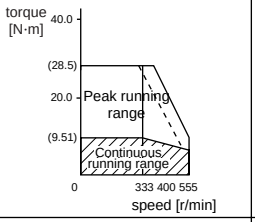	MSMD041 * * 3N 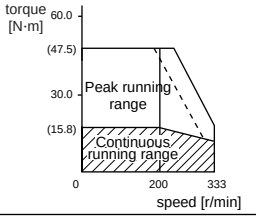	MSMD041 * * 4N 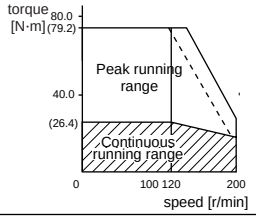
200V	100W	MSMD012 * * 1N 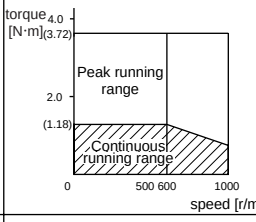	MSMD012 * * 2N 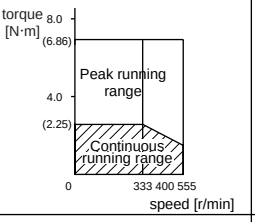	MSMD012 * * 3N 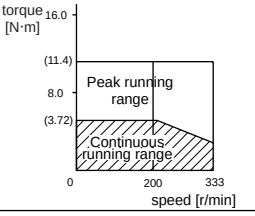	MSMD012 * * 4N 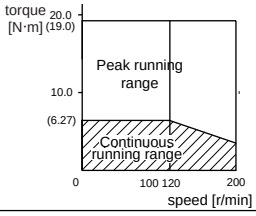
	200W	MSMD022 * * 1N 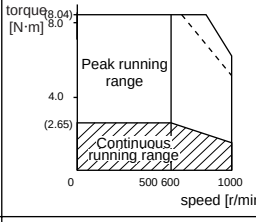	MSMD022 * * 2N 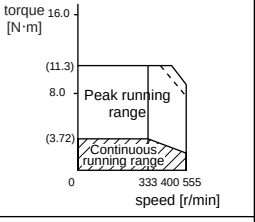	MSMD022 * * 3N 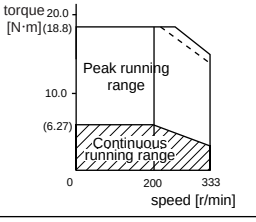	MSMD022 * * 4N 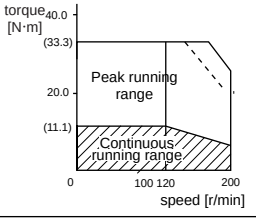
	400W	MSMD042 * * 1N 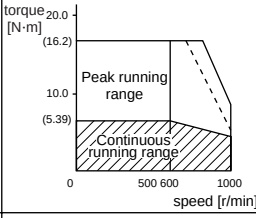	MSMD042 * * 2N 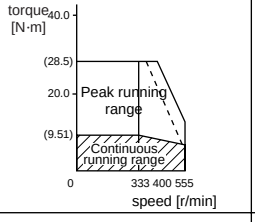	MSMD042 * * 3N 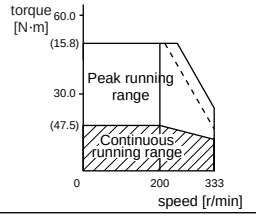	MSMD042 * * 4N 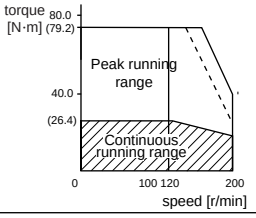
	750W	MSMD082 * * 1N 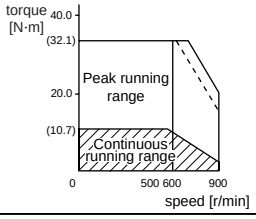	MSMD082 * * 2N 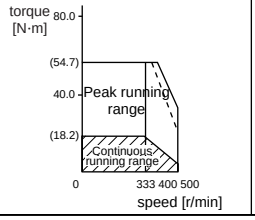	MSMD082 * * 3N 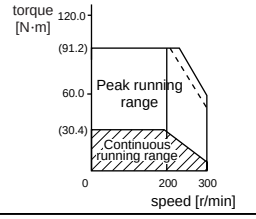	MSMD082 * * 4N 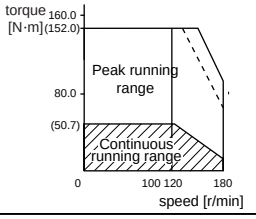

Dotted line represents the torque at 10% less supply voltage.

Block Diagram of Driver

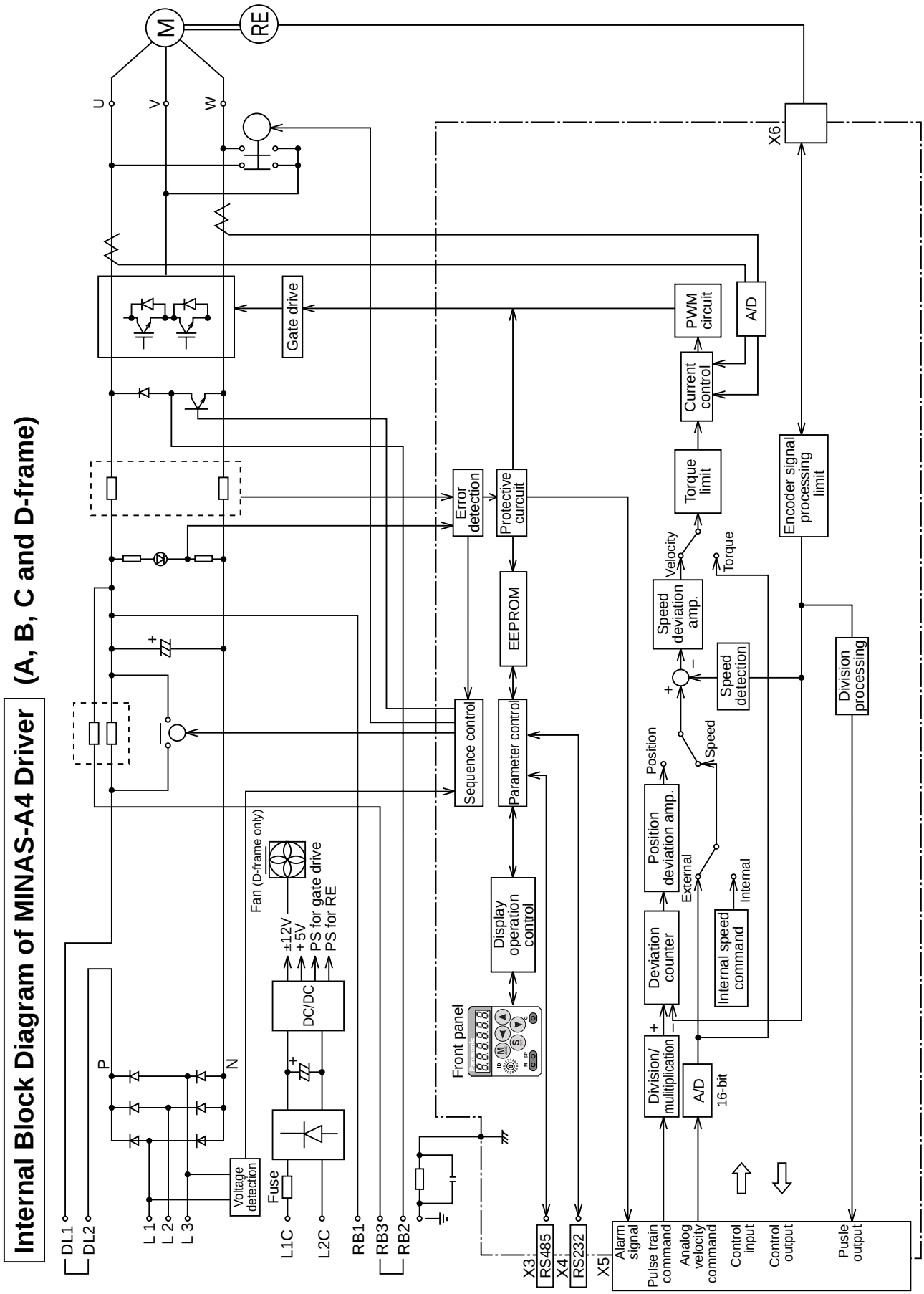

Internal Block Diagram of MINAS-A4 Driver (E and F-frame)

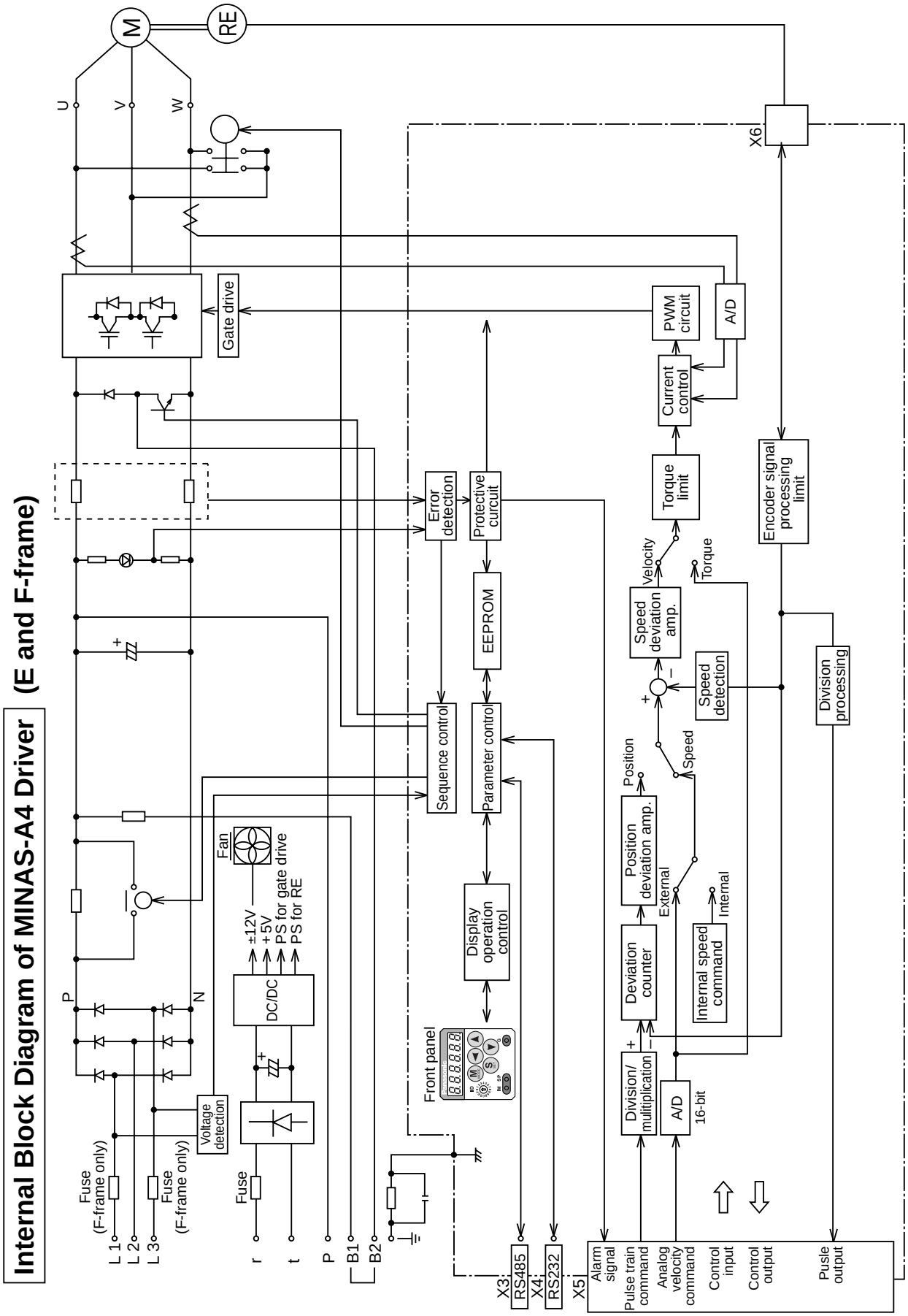

Block Diagram by Control Mode

Position Control Mode

- when Pr02 (Setup of control mode) is 0,
  when Pr02 (Setup of control mode) is 3 and 1st control mode
  when Pr02 (Setup of control mode) is 4 and 1st control mode

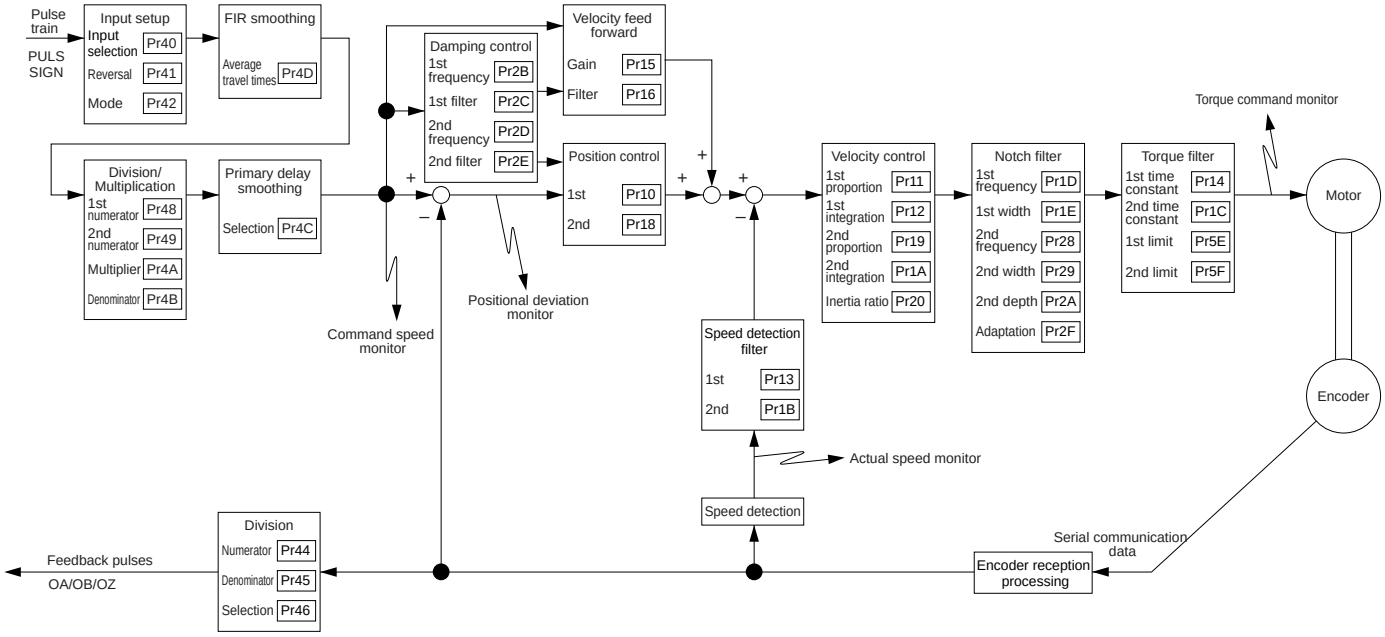

Velocity Control Mode

- when Pr02 (Setup of control mode) is 1,
  when Pr02 (Setup of control mode) is 3 and 2nd control mode
  when Pr02 (Setup of control mode) is 5 and 1st control mode

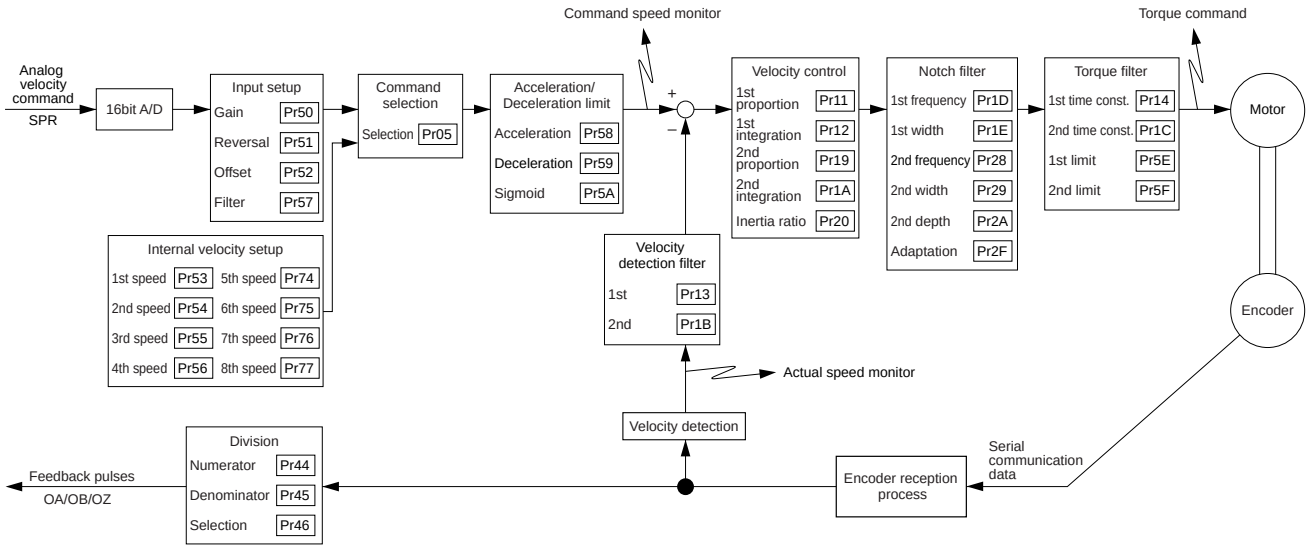

Torque Control Mode

• when Pr02 (Setup of control mode) is 2,
when Pr02 (Setup of control mode) is 4 and 2nd control mode
when Pr02 (Setup of control mode) is 5 and 2nd control mode

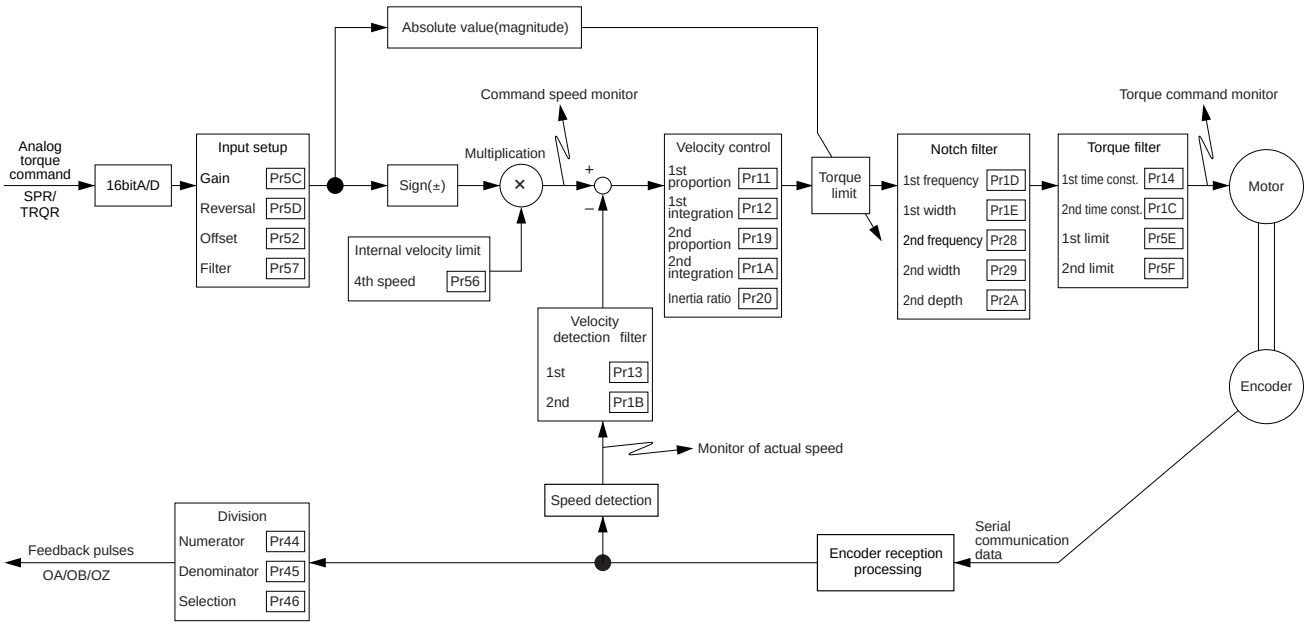

Full-closed Control Mode

• when Pr02 (Setup of control mode) is 6,

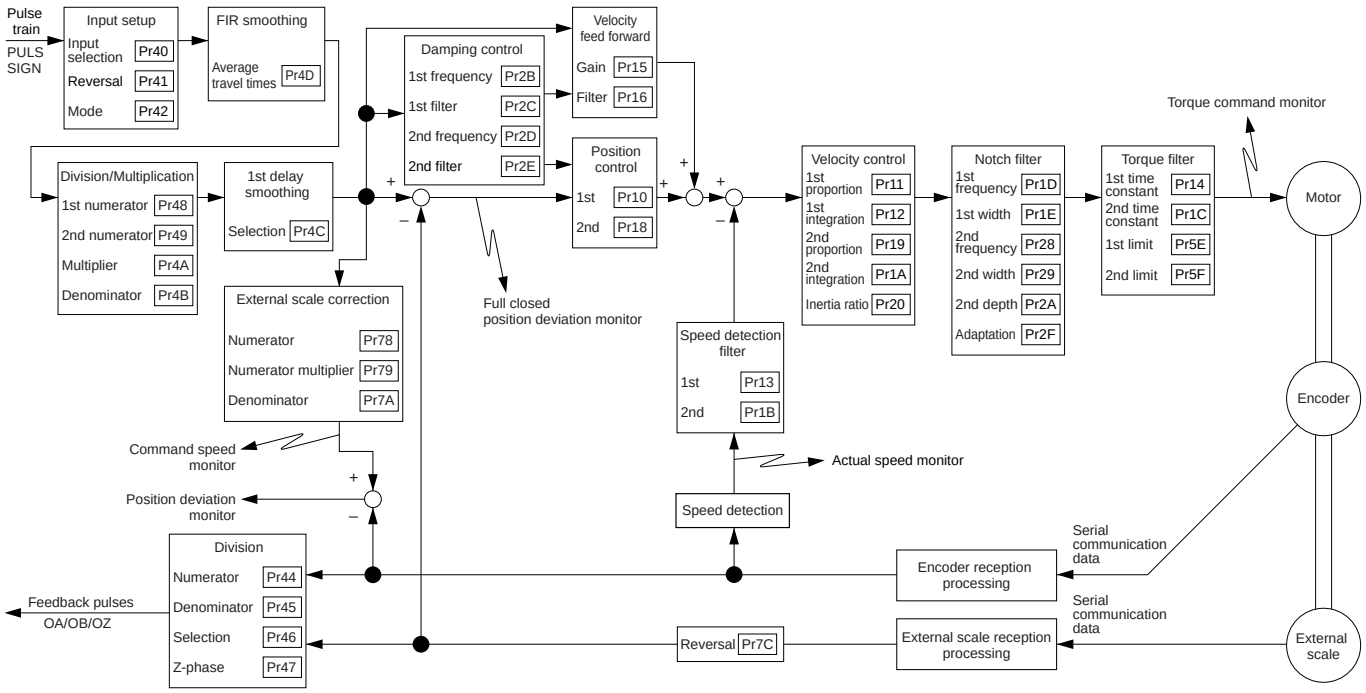

Specifications

Basic specifications	Input power	100V	Main circuit		Single phase, 100 – 115V +10% –15% 50/60Hz
			Control circuit		Single phase, 100 – 115V +10% –15% 50/60Hz
		200V	Main circuit	A and B-frame	Single phase, 200 – 240V +10% –15% 50/60Hz
				C and D-frame	Single/3-phase, 200 – 240V +10% –15% 50/60Hz
				E and F-frame	3-phase, 200 – 230V +10% –15% 50/60Hz
			Control circuit	A to D-frame	Single phase, 200 – 240V +10% –15% 50/60Hz
				E and F-frame	Single phase, 200 – 230V +10% –15% 50/60Hz
	Environment		Temperature		Operating : 0 to 55˚C, Storage : –20 to +80˚C
			Humidity		Both operating and storage : 90%RH or less (free from condensation)
			Altitude		1000m or lower
			Vibration		5.88m/s2 or less, 10 to 60Hz (No continuous use at resonance frequency)
	Control method				IGBT PWM Sinusoidal wave drive
	Encoder feedback				17-bit (131072 resolution) absolute/incremental encoder, 2500P/r (10000 resolution) incremental encoder
	External scale feedback				AT500 series by Mitutoyo (Resolution 0.05[μm] , max. speed 2[m/s]) ST771 by Mitutoyo (Resolution 0.5[μm] , max. speed 2[m/s])
	Control signal		Input		10 inputs (1) Servo-ON, (2) Control mode switching, (3) Gain switching/Torque limit switching, (4) Alarm clear Other inputs vary depending on the control mode.
			Output		6 outputs (1) Servo alarm, (2) Servo ready, (3) Release signal of external brake (4) Zero speed detection, (5) Torque in-limit. Other outputs vary depending on the control mode.
	Analog signal		Input		3 inputs (16Bit A/D : 1 input, 10Bit A/D : 2 inputs)
			Output		2 outputs (for monitoring) (1) Velocity monitor (Monitoring of actual motor speed or command speed is enabled. Select the content and scale with parameter.), (2) Torque monitor (Monitoring of torque command, (approx.. 3V/rated torque)), deviation counter or full-closed deviation is enabled. Select the content or scale with parameter.)
	Pulse signal		Input		4 inputs Select the exclusive input for line driver or photo-coupler input with parameter.
			Output		4 outputs Feed out the encoder pulse (A, B and Z-phase) or external scale pulse (EXA, EXB and EXZ-phase) in line driver. Z-phase and EXZ-phase pulse is also fed out in open collector.
	Communication function		RS232		1 : 1 communication to a host with RS23 interface is enabled.
			RS485		1 : n communication up to 15 axes to a host with RS485 interface is enabled.
	Front panel				(1) 5 keys (MODE, SET, UP, DOWN, SHIFT), (2) LED (6-digit)
	Regeneration				A and B-frame : no built-in regenerative resistor (external resistor only) C to F-frame : Built-in regenerative resistor (external resistor is also enabled.)
	Dynamic brake				Setup of action sequence at Power-OFF, Servo-OFF, at protective function activation and over-travel inhibit input is enabled.
	Control mode				Switching among the following 7 mode is enabled, (1) Position control, (2) Velocity control, (3) Toque control, (4) Position/Velocity control, (5) Position/Torque control, (6) Velocity/Torque control and (7) Full-closed control.

Function	Control input		Inputs of 1) Servo-ON, 2) Alarm clear, 3) Gain switching, 4) Control mode switching, 5) CW over-travel inhibition and 7) CCW over-travel inhibition are common, and other inputs vary depending on the control mode.
	Position control	Control input	(1) Deviation counter clear, (2) Command pulse inhibition, (3) Damping control switching, (4) Gain switching or Torque limit switching
		Control output	Positioning complete (In-position)
		Pulse input: Max. command pulse frequency	Exclusive interface for line driver : 2Mpps, Line driver : 500kpps, Open collector : 200kpps
		Pulse input: Input pulse signal format	Support (1) RS422 line drive signal and (2) Open collector signal from controller.
		Pulse input: Type of input pulse	(1) CW/CCW pulse, (2) Pulse signal/rotational direction signal, (3) 90˚C phase difference signal
		Pulse input: Electronic gear (Division/ Multiplication of command pulse)	Process the command pulse frequency $\times \frac{(1 \text{ to } 10000) \times 2^{(0 \text{ to } 17)}}{1 \text{ to } 10000}$ as a position command input
		Pulse input: Smoothing filter	Primary delay filter is adaptable to the command input Selectable of (1) Position control for high stiffness machine and (2) FIR type filter for position control for low stiffness machine.
		Analog input: Torque limit command input	Individual torque limit for both CW and CCW direction is enabled. (3V/rated torque)
	Velocity control	Control input	(1) Speed zero clamp, (2) Selection of internal velocity setup, (3) Gain switching or Torque limit switching input
		Control output	(1) Speed arrival (at-speed)
		Analog input: Velocity command input	Setup of scale and rotational direction of the motor against the command voltage is enabled with parameter, with the permissible max. voltage input = Å} 10V and 6V/rated speed (default setup).
		Analog input: Torque limit command input	Individual torque limit for both CW and CCW direction is enabled. (3V/rated torque)
		Speed control range	1 : 5000
		Internal velocity command	8-speed with parameter setup
		Soft-start/down function	Individual setup of acceleration and deceleration is enabled, with 0 to 10s/1000r/min. Sigmoid acceleration/deceleration is also enabled.
		Zero-speed clam	0-clamp of internal velocity command with speed zero clamp input is enabled.
	Torque control	Control input	(1) CW over-travel inhibition, (2) CCW over-travel inhibition, (3) Speed zero clamp
		Control output	(1) Speed arrival (at-speed)
		Analog input: Velocity command input	Setup of scale and CW/CCW torque generating direction of the motor against the command voltage is enabled with parameter, with the permissible max. voltage input = Å} 10V and 3V/rated speed (default setup).
		Analog input: Speed limit input	Speed limit input by analog voltage is enabled. Scale setup with parameter.
		Speed limit function	Speed limit value with parameter or analog input is enabled.
	Full-closed control	Control input	(1) CW over-travel inhibition, (2) CCW over-travel inhibition (3) Deviation counter clear, (4) Command pulse input inhibition, (5) Electronic gear switching, (6) Damping control switching
		Control output	(1) Full-closed positioning complete (in-position)
		Pulse input: Max. command pulse frequency	500kpps (photo-coupler input), 2Mpps (Exclusive input for line driver)
		Pulse input: Input pulse signal format	Differential input. Selectable with parameter ((1) CCW/CW, (2) A and B-phase, (3) Command and direction
		Pulse input: Electronic gear (Division/ Multiplication of command pulse)	Process the command pulse frequency $\times \frac{(1 \text{ to } 10000) \times 2^{(0 \text{ to } 17)}}{1 \text{ to } 10000}$ as a position command input
		Pulse input: Smoothing filter	Primary delay filter is adaptable to the command input.
		Analog input: Torque limit command input	Individual torque limit for both CW and CCW direction is enabled. (3V/rated torque)
		Setup range of division/multiplication of external scale	Setting of ratio between encoder pulse (denominator) and external scale pulse (numerator) is enabled within a range of (1 to 10000) x $2^{(0-17)}$ / (1 to 10000).
	Common	Auto-gain tuning: Real-time	Corresponds to load inertia fluctuation, possible to automatically set up parameters related to notch filter.
		Auto-gain tuning: Normal mode	Estimates load inertia and sets up an appropriate servo gain.
		Auto-gain tuning: Fit-gain function	Automatically searches and sets up the value which makes the fastest settling time with external command input.
		Masking of unnecessary input	Masking of the following input signal is enabled. (1) Over-travel inhibition, (2) Torque limit, (3) Command pulse inhibition, (4) Speed-zero clamp
		Division of encoder feedback pulse	Set up of any value is enabled (encoder pulses count is the max.).
		Protective function: Soft error	Over-voltage, under-voltage, over-speed over-load, over-heat, over-current and encoder error etc.
		Protective function: Hard error	Excess position deviation, command pulse division error, EEPROM error etc.
		Traceability of alarm data	Traceable up to past 14 alarms including the present one.
		Damping control function	Manual setup with parameter
		Setup: Manual	5push switches on front panel [MODE] [SET] [△] [▽] [◁]
		Setup: Setup support software	PANATERM® (Supporting OS : Windows95, Windows98, Windows ME, Windows2000, Windows.NET and Windows XP)

“ Hit & Stop” Homing and “ Press & Hold” Control

Homing with Hit & Stop

You can set up the homing position with "Hit & Stop" where it is not easy to install a sensor due to environment.

(1) when you make a point where the work (load) hits as an origin

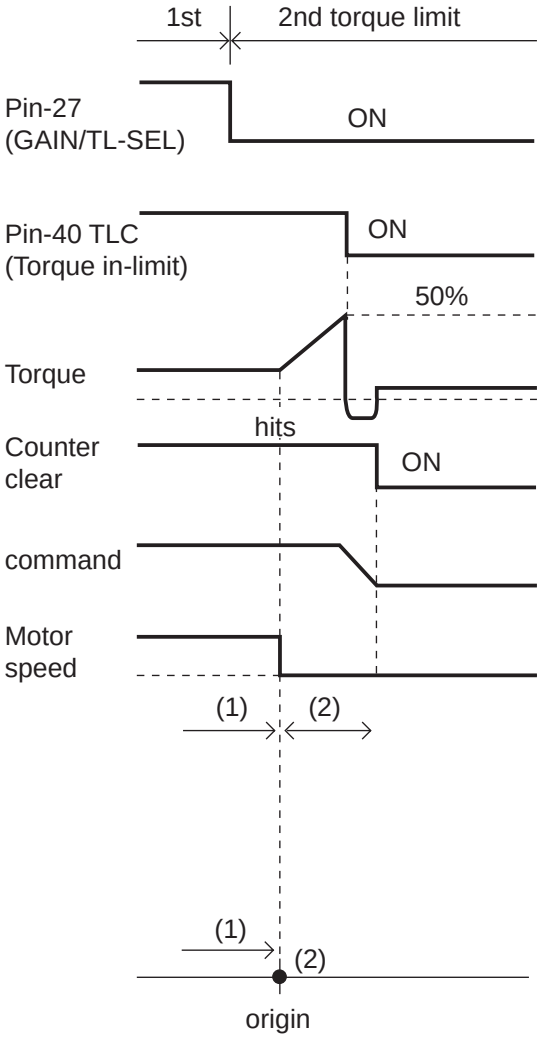

(2) when you stop the work (load) using Z-phase after making a hitting point as a starting point, then make that stopping point as an origin.

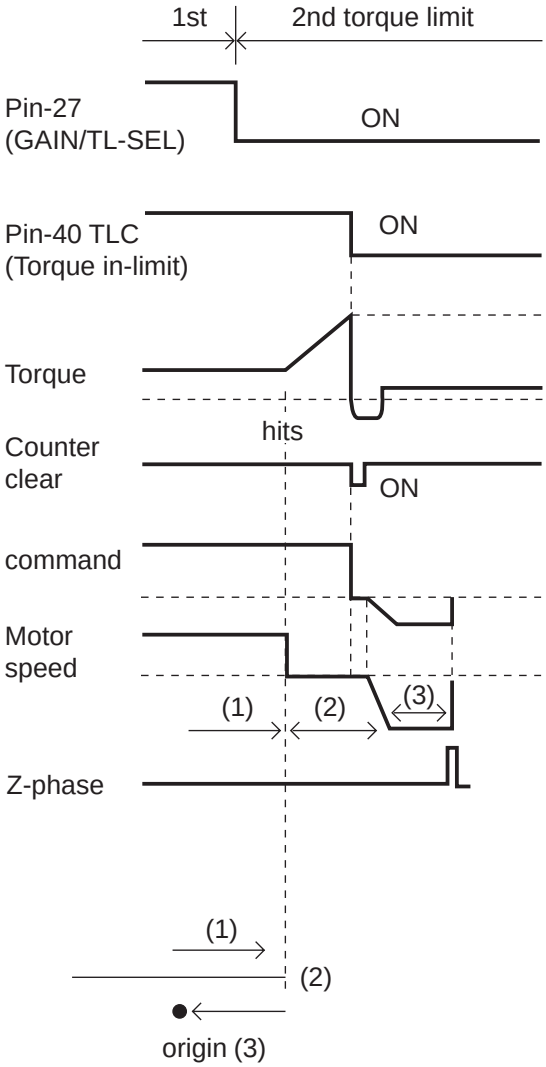

Parameter No.	Title	Setup example
5F	Setup of 2nd torque limit	50 (Set up to less than 100%)
70	Excess setup of position deviation	25000
73	Setup of over-speed level	0 (6000r/min)
03	Selection of torque limit	3
09	Selection of alarm output	0 (Torque in-limit)

<Remarks>

Make the Pin-27 H (Off= Open) after the Hit & Stop Homing is completed.

Press & Hold Control

Application example

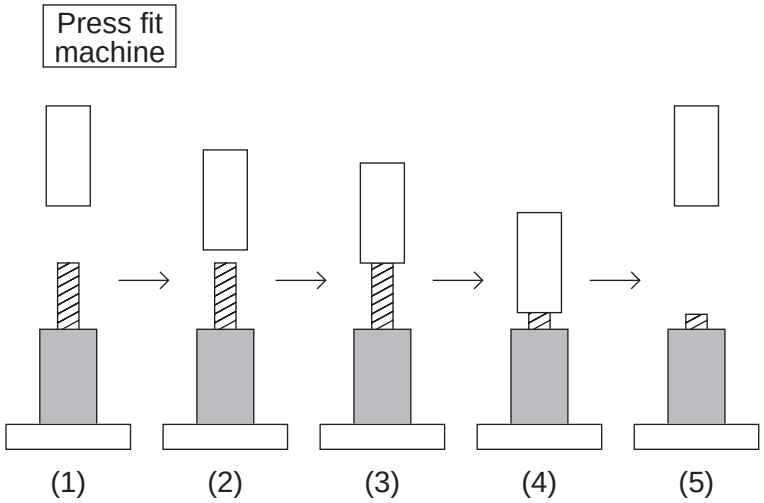

Parameter No.	Title	Setup example
03	Setup of 2nd torque limit	3
09	Selection of alarm output	0
5E	Setup of 1st torque limit	200
5F	Setup of 2nd torque limit	50
70	Excess setup of position deviation	25000
73	Setup of over-speed level	0

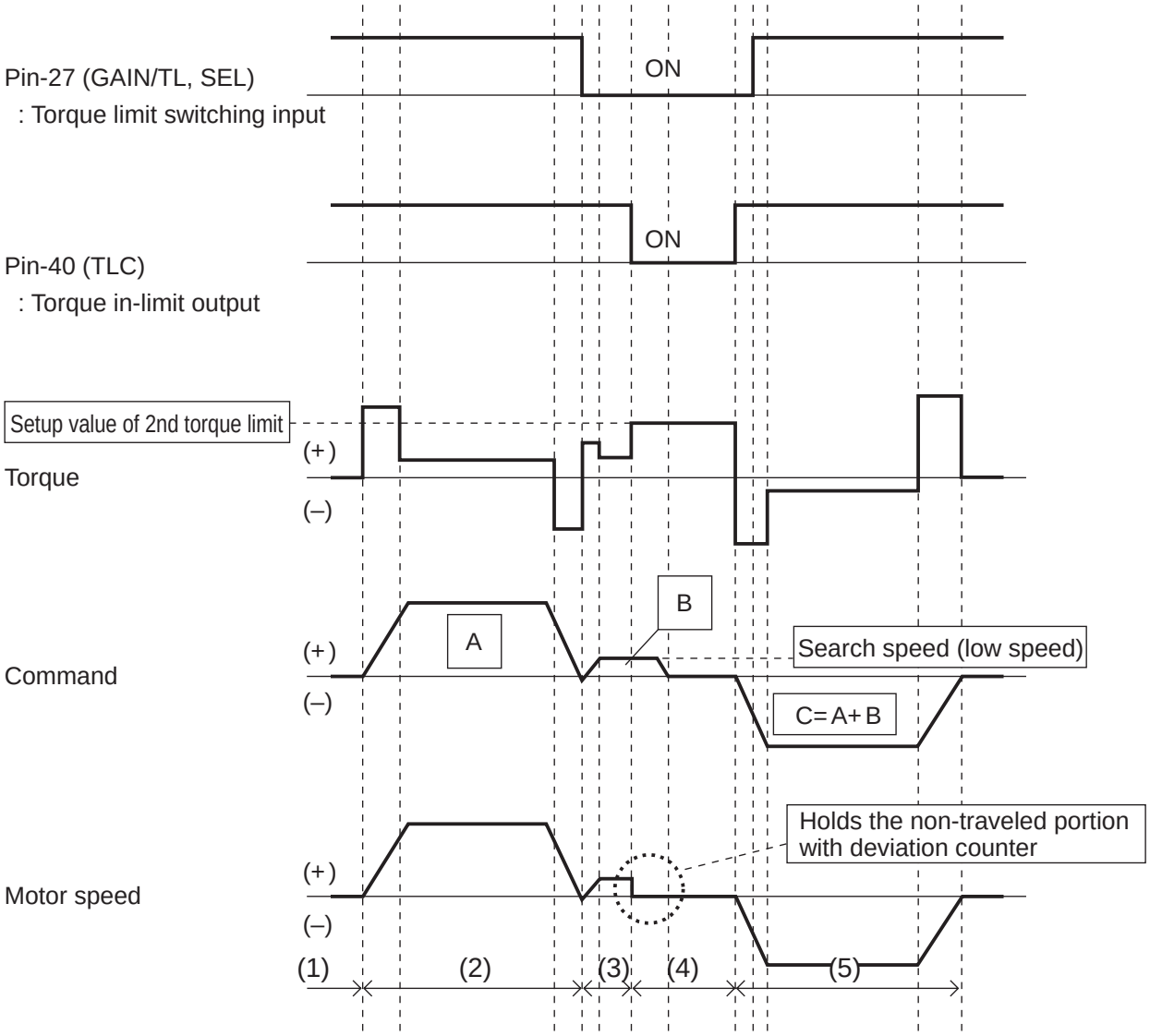

MEMO