Product datasheet

Specifications



Complete emergency switching off push button, Harmony XA2, plastic head, 22mm, turn to release, 40mm, 1NC, red

XA2AS542

Main

Range of product	Harmony XA2
Device short name	XA2
Product or component type	Complete emergency switching off push-button
Device presentation	Complete product
Component name	XA2A
Bezel material	Plastic
Mounting diameter	22.5 mm
Sale per indivisible quantity	1

Complementary

Operating position	Any position
Device mounting	Fixing hole - diameter: 22.5 mm
Fixing center	>= 30 x 40 mm (panel) - thickness: 1…5 mm
Fixing mode	Fixing nut recommended torque: 2.2 N.m (+/- 0.2 N.m)
Shape of signaling unit head	Round
Reset	Turn to release
Operator profile	Red mushroom Ø 40 mm
Cap/operator or lens colour	Red
Contacts type and composition	1 NC
Contact operation	Slow-break
Positive opening	With NC contact
Mechanical durability	100000 cycles
Connections - terminals	Screw clamp terminal, <= 2 x 1.5 mm² Screw clamp terminal, <= 1 x 2.5 mm² Screw clamp terminal, >= 1 x 0.5 mm² Faston terminals, connection size: 6.3 mm
Tightening torque	0.8…1.2 N.m
Short-circuit protection	10 A gL fuse conforming to IEC 60269-1
[Ui] rated insulation voltage	600 V conforming to IEC 60947-1
[Uimp] rated impulse withstand voltage	6 kV conforming to IEC 60947-1
[Ie] rated operational current	3 A at 240 V, AC-15, A600 0.27 A at 250 V, DC-13, Q600

Price is “List Price” and may be subject to a trade discount – check with your local distributor or retailer for actual price.

Disclaimer: This documentation is not intended as a substitute for and is not to be used for determining suitability or reliability of these products for specific user applications

Electrical durability	500000 cycles, AC-15, 3 A at 230 V, operating rate <60 cyc/mn, load factor: 0.5 conforming to IEC 60947-5-1 500000 cycles, DC-13, 0.2 A at 110 V, operating rate <60 cyc/mn, load factor: 0.5 conforming to IEC 60947-5-1
Electrical reliability	Λ < 10exp(-8) at 24 V, 5 mA conforming to IEC 60947-5-4
Height	43 mm
Width	30 mm
Depth	74.0 mm
Net weight	0.057 kg
Type of operator	Turn to release

Environment

Protective treatment	TC
Ambient air temperature for storage	-40…70 °C
Ambient air temperature for operation	-25…55 °C
Overvoltage category	Class I conforming to IEC 536
IP degree of protection	IP65 conforming to IEC 60068-2-27
IK degree of protection	IK07
Standards	GB 14048.1 IEC 60947-1 IEC 60947-5-1 GB 14048.5
Product certifications	CCC CE UKCA
Vibration resistance	5 gn (f= 2…500 Hz) conforming to IEC 60068-2-6
Shock resistance	50 gn (duration = 11 ms) for half sine wave acceleration conforming to IEC 60068-2-27 30 gn (duration = 18 ms) for half sine wave acceleration conforming to IEC 60068-2-27

Packing Units

Unit Type of Package 1	PCE
Number of Units in Package 1	1
Package 1 Height	7.400 cm
Package 1 Width	4.000 cm
Package 1 Length	4.300 cm
Package 1 Weight	57.000 g
Unit Type of Package 2	BB1
Number of Units in Package 2	5
Package 2 Height	3.000 cm
Package 2 Width	12.000 cm
Package 2 Length	60.000 cm
Package 2 Weight	290.000 g
Unit Type of Package 3	S02
Number of Units in Package 3	70

Package 3 Height	15.000 cm
Package 3 Width	30.000 cm
Package 3 Length	40.000 cm
Package 3 Weight	4.510 kg

Contractual warranty

Warranty (in months)	18

Environmental Data

Schneider Electric aims to achieve Net Zero status by 2050 through supply chain partnerships, lower impact materials, and circularity via our ongoing “Use Better, Use Longer, Use Again” campaign to extend product lifetimes and recyclability.

Environmental Data explained >

How we assess product sustainability >

More information about methodology >

Environmental footprint

Total lifecycle Carbon footprint	**0.7 kg CO2 eq.**
Carbon footprint of the manufacturing phase [A1 to A3]	**0.5 kg CO2 eq.**
Carbon footprint of the distribution phase [A4]	**0 kg CO2 eq.**
Carbon footprint of the installation phase [A5]	**0 kg CO2 eq.**
Carbon footprint of the use phase [B2, B3, B4, B6]	**0.1 kg CO2 eq.**
Carbon footprint of the end-of-life phase [C1 to C4]	**0.1 kg CO2 eq.**
Environmental Disclosure	**Product Environmental Profile**

Use Better

Materials and Substances

Packaging made with recycled cardboard	**Yes**
Packaging without single use plastic	**Yes**
EU RoHS Directive	**Compliant**
REACh Regulation	**Free of Substances of Very High Concern above the threshold**

Use Again

Repack and remanufacture

Recyclability potential, in %	**33**
End of life manual availability	**End of Life Information**
Take-back	**No**
WEEE Label	**The product must be disposed on European Union markets following specific waste collection and never end up in rubbish bins**

Dimensions Drawings

Dimensions

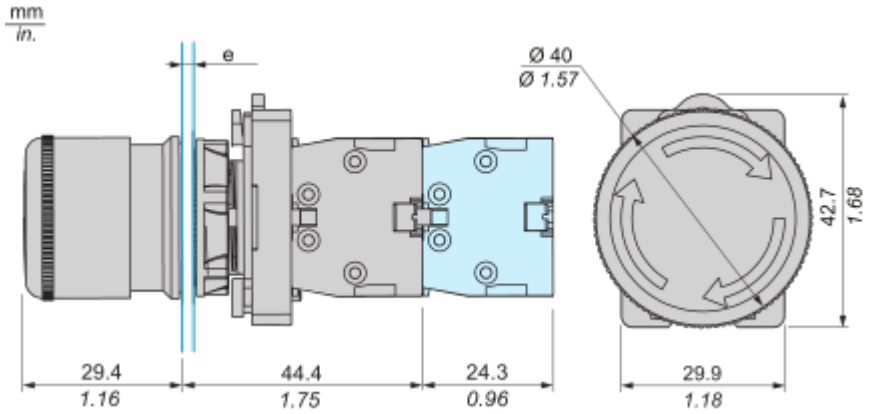

e : Clamping thickness : 1 to 5 mm/0.04 to 0.20 in.

Head Dimension

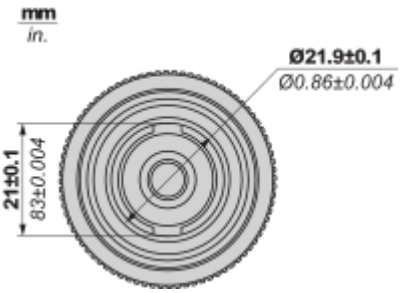

Mounting and Clearance

Panel Cut-Out

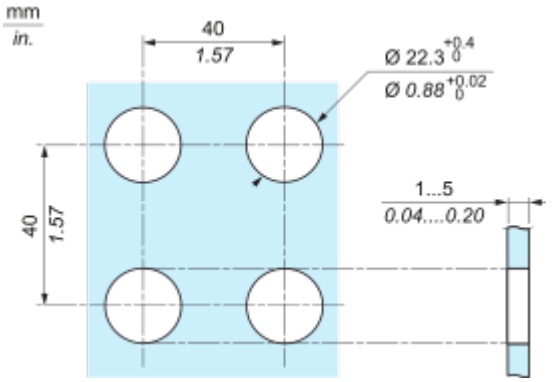

Connections and Schema

Wiring Diagram

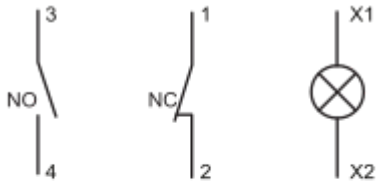

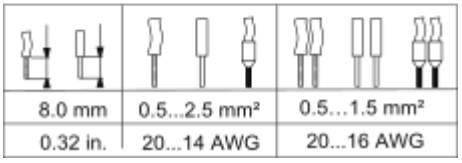

8.0 mm	0.5...2.5 mm²	0.5...1.5 mm²
0.32 in.	20...14 AWG	20...16 AWG

Wiring tightening torque : 0.8 ... 1.2 Nm (7 ... 10.6 lb-in)

Image of product / Alternate images

Alternative








Schneider Electric
ZA2EE102
1
2 (NC)


13
2
NC
1
24

