Product datasheet

Specifications



Complete selector switch, Harmony XA2, plastic short handle, 22mm, 2-position, 1NO+1NC, stay put, black

XA2AD25

Main

Range of product	Harmony XA2
Device short name	XA2
Product or component type	Complete selector switch
Device presentation	Complete product
Component name	XA2A
Bezel material	Plastic
Fixing collar material	Plastic
Mounting diameter	22.5 mm

Complementary

Sale per indivisible quantity	1
Fixing center	>= 30 x 40 mm (panel) - thickness: 1…5 mm
Fixing mode	Fixing nut: 2…2.4 N.m
Shape of signaling unit head	Round
Operator profile	Black standard handle (white)
Operator position information	2 positions 90°
Contacts type and composition	1 NO + 1 NC
Contact operation	Slow-break
Mechanical durability	300000 cycles
Connections - terminals	Screw clamp terminal, clamping capacity: <= 2 x 1.5 mm² Screw clamp terminal, clamping capacity: <= 1 x 2.5 mm² Screw clamp terminal, clamping capacity: >= 1 x 0.5 mm² Faston terminals, connection size: 6.3 mm
Tightening torque	0.8…1.2 N.m
Short-circuit protection	10 A fuse type gL conforming to IEC 60269-1
[Ith] conventional free air thermal current	10 A (screw-clamp terminals)
[Ui] rated insulation voltage	600 V conforming to IEC 60947-1
[Uimp] rated impulse withstand voltage	6 kV conforming to IEC 60947-1
[Ie] rated operational current	3 A at 240 V, AC-15, A600 0.27 A at 250 V, DC-13, Q600
Electrical durability	500000 cycles, AC-15, 3 A at 230 V, operating rate <60 cyc/mn, load factor: 0.5 conforming to IEC 60947-5-1 500000 cycles, DC-13, 0.2 A at 110 V, operating rate <60 cyc/mn, load factor: 0.5 conforming to IEC 60947-5-1
Electrical reliability	Λ < 10exp(-8) at 24 V and 5 mA conforming to IEC 60947-5-4

Price is “List Price” and may be subject to a trade discount – check with your local distributor or retailer for actual price.

Disclaimer: This documentation is not intended as a substitute for and is not to be used for determining suitability or reliability of these products for specific user applications

Width	30.0 mm
Height	43.0 mm
Depth	70.0 mm
Net weight	0.054 kg
Type of operator	Stay put
Head type	Standard
Cap/operator or lens colour	Black

Environment

Protective treatment	TC
Ambient air temperature for storage	-40…70 °C
Ambient air temperature for operation	-25…55 °C
Overvoltage category	Class I conforming to IEC 536
IP degree of protection	IP65 conforming to IEC 60529
IK degree of protection	IK06 conforming to IEC 60529
Standards	GB 14048.1 IEC 60947-1 GB 14048.5 IEC 60947-5-1
Product certifications	CCC CE UKCA
Vibration resistance	5 gn (f= 2…500 Hz) conforming to IEC 60068-2-6
Shock resistance	50 gn (duration = 11 ms) for half sine wave acceleration conforming to IEC 60068-2-27 30 gn (duration = 18 ms) for half sine wave acceleration conforming to IEC 60068-2-27

Packing Units

Unit Type of Package 1	PCE
Number of Units in Package 1	1
Package 1 Height	7 cm
Package 1 Width	3 cm
Package 1 Length	4.3 cm
Package 1 Weight	54 g
Unit Type of Package 2	BB1
Number of Units in Package 2	5
Package 2 Height	3 cm
Package 2 Width	12 cm
Package 2 Length	60 cm
Package 2 Weight	275 g
Unit Type of Package 3	S02
Number of Units in Package 3	100
Package 3 Height	15 cm
Package 3 Width	30 cm

Package 3 Length	40 cm
Package 3 Weight	5.95 kg

Contractual warranty

Warranty (in months)	18

Environmental Data

Schneider Electric aims to achieve Net Zero status by 2050 through supply chain partnerships, lower impact materials, and circularity via our ongoing “Use Better, Use Longer, Use Again” campaign to extend product lifetimes and recyclability.

Environmental Data explained >

How we assess product sustainability >

More information about methodology >

Environmental footprint

Total lifecycle Carbon footprint	**0.7 kg CO2 eq.**
Carbon footprint of the manufacturing phase [A1 to A3]	**0.4 kg CO2 eq.**
Carbon footprint of the distribution phase [A4]	**0 kg CO2 eq.**
Carbon footprint of the installation phase [A5]	**0 kg CO2 eq.**
Carbon footprint of the use phase [B2, B3, B4, B6]	**0.2 kg CO2 eq.**
Carbon footprint of the end-of-life phase [C1 to C4]	**0.1 kg CO2 eq.**
Environmental Disclosure	**Product Environmental Profile**

Use Better

Materials and Substances

Packaging made with recycled cardboard	**Yes**
Packaging without single use plastic	**Yes**
EU RoHS Directive	**Compliant**
REACh Regulation	**Free of Substances of Very High Concern above the threshold**

Use Again

Repack and remanufacture

Recyclability potential, in %	**26**
End of life manual availability	**End of Life Information**
Take-back	**No**
WEEE Label	**The product must be disposed on European Union markets following specific waste collection and never end up in rubbish bins**

Dimensions Drawings

Dimensions

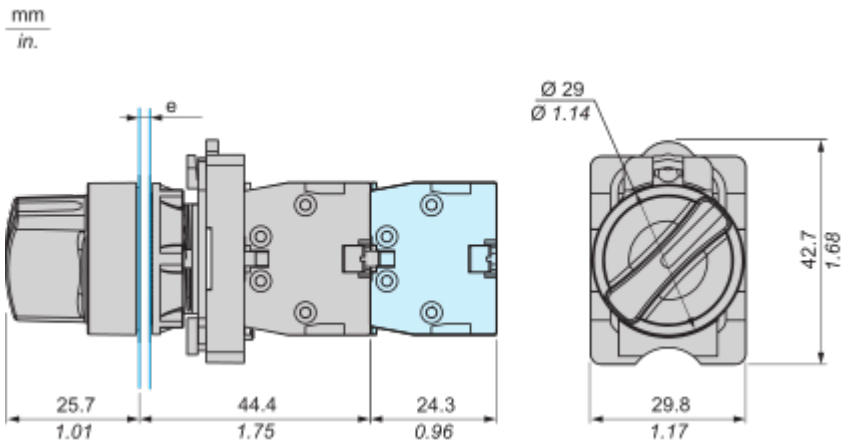

e : Clamping thickness : 1 to 5 mm/0.04 to 0.20 in.

Head Dimension

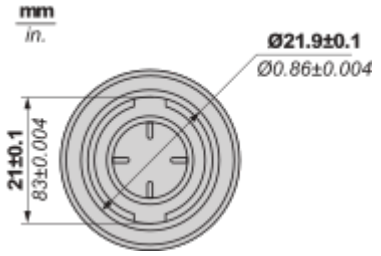

Mounting and Clearance

Panel Cut-Out

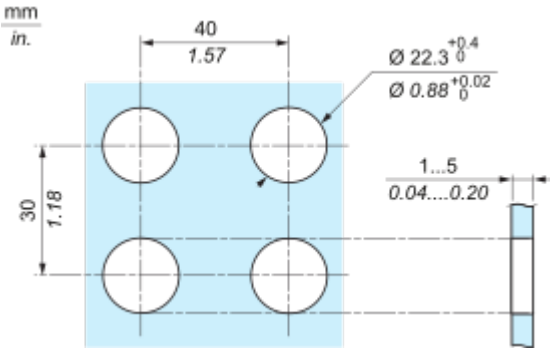

Connections and Schema

Wiring Diagram

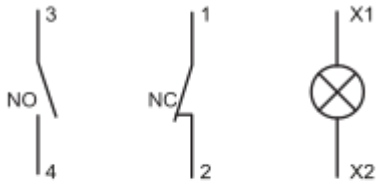

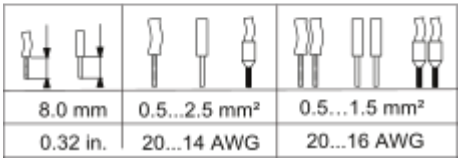

8.0 mm	0.5...2.5 mm²	0.5...1.5 mm²
0.32 in.	20...14 AWG	20...16 AWG

Wiring tightening torque : 0.8 ... 1.2 Nm (7 ... 10.6 lb-in)

Image of product / Alternate images

Alternative



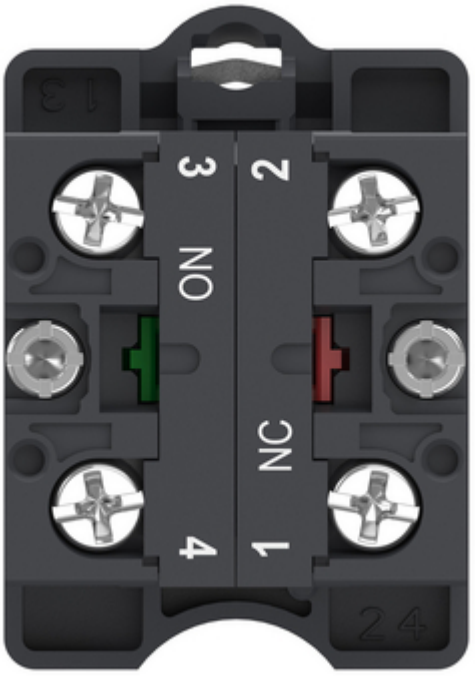








Schneider Electric
ZA2EE102
1
2 (NC)