

DR/SC00015U - DR/SC10000U

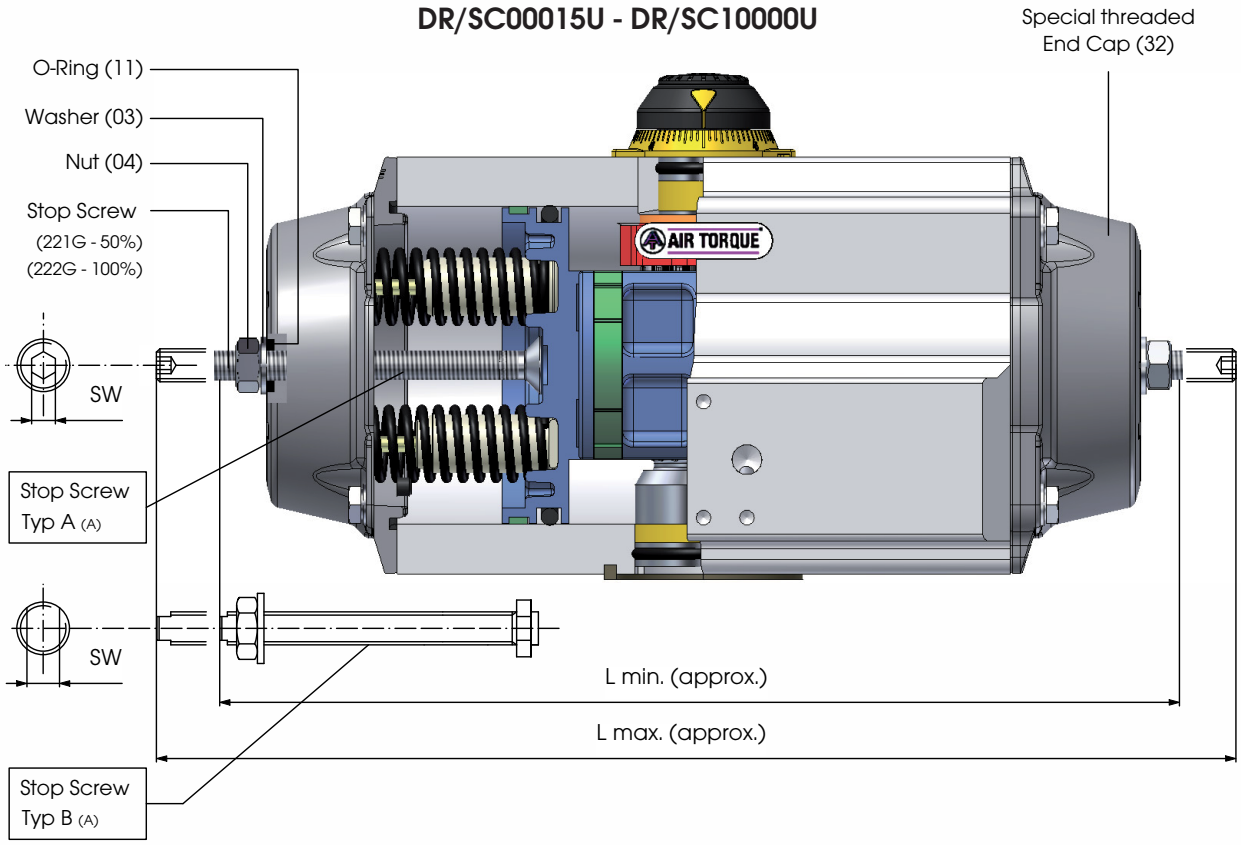

Parts and Quantity for one Actuator	Part No.	Quantity	Part No.	Quantity
	03	2	221...G (50%)	2
	04	2	222...G (100%)	2
	32	2		

Note:
(A) - For the type of the screw see the table.

Actuator with Travel Stop for 50% stroke adjustment (90°-45°)

DR/SC U ... B 50%	00015	00030	00060	00100	00150	00220	00300	00450	00600	00900	01200	02000	03000	04000	05000	10000
L min. mm	162	180	244	270	296	365	371	453	468	521	624	659	760	995	918	1060
L max. mm	176	196	266	295	324	399	409	497	515	571	680	725	838	1080	1006	1160
Stop Screw	A-SW3		A-SW4		A-SW5	B-SW8		B-SW10		B-SW10	B-SW13		B-SW17	B-SW22	B-SW22	B-SW30

Actuator with Travel Stop for 100% stroke adjustment (90°-0°)

DR/SC U ... B 100%	00015	00030	00060	00100	00150	00220	00300	00450	00600	00900	01200	02000	03000	04000	05000	10000
L min. mm	158	184	242	280	303	356	368	449	461	531	628	653	762	910	910	1060
L max. mm	186	216	286	330	359	424	444	537	555	631	739	785	918	1080	1086	1260
Stop Screw	A-SW3		A-SW4		A-SW5	B-SW8		B-SW10		B-SW10	B-SW13		B-SW17	B-SW22	B-SW22	B-SW30

Air Torque GmbH
Im Katzentach 16-18 · DE - 76275 Ettlingen
Tel.: +49 (0)7243 59 34-0 · Fax : +49 (0)7243 59 34-34
info@airtorque.de · www.airtorque.de

Modifications reserved. Date 12.2011.
No guarantee for accuracy.
Older data sheets are invalid.