Drive and stirring technology for

PHARMA | FOOD | COSMETICS | CHEMICALS | AUTOMATION

Agitator drive eco-Drive^{V2}



Rotation direction

- Stepless speed setting with scale 1-12
- Housing aluminium anodised
- ATEX certification
  Ex II 2 G Ex h IIC T5 Gb X
  Ex II 2 D Ex h IIIC T100°C Db X
- Acetone-resistant shaft seal
- Oil and silicone-free
- Protection class IP67
- Drive shaft
  V4A stainless steel 1.4404
  other materials optional

Drive sizes	Art. No.	Medium air consumption	A	B	C	D	E	F	G	H
eco-Drive 450 ^{V2} with threaded hub M12	6001	25 l/min	22	94.5	75	39.5	10	6	105	Ø20
eco-Drive 900 ^{V2} with threaded hub M12	6002	50 l/min	22	109	75	39.5	10	6	105	Ø20
eco-Drive 1800 ^{V2} with threaded hub M16	6003	100 l/min	27	115.5	75	40	12	8	169	Ø28
eco-Drive 3600 ^{V2} with threaded hub M16	6004	200 l/min	27	137.5	75	40	12	8	169	Ø28
eco-Drive 450 eco-Quick ^{V2} (quick-change system for agitator shafts)	6005	25 l/min	51	94.5	75	39.5	10	6	105	Ø39
eco-Drive 900 eco-Quick ^{V2} (quick-change system for agitator shafts)	6006	50 l/min	51	109	75	39.5	10	6	105	Ø39
eco-Drive 1800 eco-Quick ^{V2} (quick-change system for agitator shafts)	6007	100 l/min	53	115.5	75	40	12	8	169	Ø44
eco-Drive 3600 eco-Quick ^{V2} (quick-change system for agitator shafts)	6008	200 l/min	53	137.5	75	40	12	8	169	Ø44

All dimensions in mm.

WE GENERATE MOVEMENT IN SPECIAL ENVIRONMENTS.



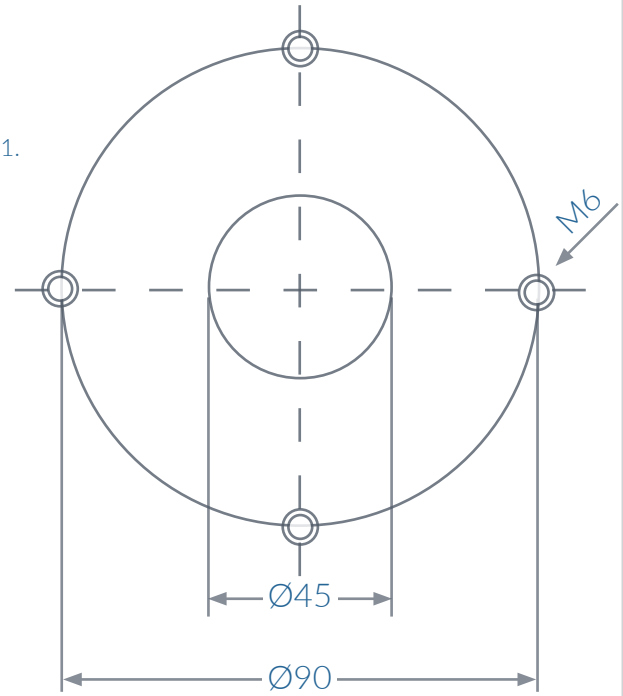

Drilling pattern on container for attachment

Types	B	Wrench size Drive hub	Torque	Rotation speed	Radial load Fr	Axial load Fa
eco-Drive 450 V2	94.5	SW17	4 Nm	0-300 rpm	400 N	100 N
with transmission 1:2	137	SW17	2 Nm	0-600 rpm	400 N	100 N
with transmission 3:1	137	SW17	12 Nm	0-100 rpm	400 N	100 N
with transmission 9:1	163	SW17	36 Nm	0-33 rpm	400 N	100 N
eco-Drive 900 V2	109	SW17	8 Nm	0-300 rpm	400 N	100 N
with transmission 1:2	151	SW17	4 Nm	0-600 rpm	400 N	100 N
with transmission 3:1	151	SW17	24 Nm	0-100 rpm	400 N	100 N
with transmission 9:1	177	SW17	72 Nm	0-33 rpm	400 N	100 N
eco-Drive 1800 V2	115.5	SW24	16 Nm	0-300 rpm	800 N	200 N
with transmission 1:2	165.5	SW24	8 Nm	0-600 rpm	800 N	200 N
with transmission 3:1	165.5	SW24	48 Nm	0-100 rpm	800 N	200 N
with transmission 9:1	197	SW24	144 Nm	0-33 rpm	800 N	200 N
eco-Drive 3600 V2	137.5	SW24	32 Nm	0-300 rpm	800 N	200 N
with transmission 1:2	187.5	SW24	16 Nm	0-600 rpm	800 N	200 N
with transmission 3:1	187.5	SW24	96 Nm	0-100 rpm	800 N	200 N
with transmission 9:1	219	SW24	288 Nm	0-33 rpm	800 N	200 N