

.DC .MCD529SP

Φ50xL.290x360x70mm
107~60 CFM

DC Crossflow fan

	Rated Volt	Voltage Range	Input Power	Rated Current	Ref. Speed	Max.Airflow		Max.Static Pressure		Noise Level	PQ Curves	UL
Model No	VDC	VDC	Watt	Amp	RPM	CFM	m3/min	Inch/H2O	mm	db(A)		
MCD529SP-12H** (****#)	12	12~13.8	12	1.0	2100	105	3	0.14	3.56	44		☑
MCD529SP-12M** (****#)	12	12~13.8	7.8	0.65	1400	86	2.4	0.11	2.79	35		☑
MCD529SP-12L** (****#)	12	12~13.8	4.08(~4.8)	0.34(~0.4)	1000	60	1.7	0.05	1.27	26		☑
MCD529SP-24H** (****#)	24	15~26	12	0.5	2200	107	3	0.14	3.56	45		☑
MCD529SP-24M** (****#)	24	15~26	7.2	0.3	1400	86	2.4	0.11	2.79	35		☑
MCD529SP-24L** (****#)	24	15~26	4.56(~4.8)	0.19(~0.2)	1000	60	1.7	0.05	1.27	26		☑
MCD529SP-48H** (****#)	48	28~55	13.44	0.28	2200	107	3	0.14	3.56	45		☑
MCD529SP-48M** (****#)	48	28~55	9.12	0.19	1400	86	2.4	0.11	2.79	35		☑
MCD529SP-48L** (****#)	48	28~55	4.8	0.1	1000	60	1.7	0.05	1.27	26		☑

- ** = "WB" for wire lead type Ball bearing, or "TB" for terminal block type Ball bearing
- (****#) = (RENON),(LESGN),(RESG F/G), ...
  1st* = R, L, C - Motor position
  2nd* = E, V, Q, H - Air outlet direction
  3rd* = S, N - Shield Guard for motor
  4th* = G, O - Grill Guard for Impeller
  # = R/D, F/G, S/C, P/W, S/V, N - Motor Function, N = none, normal motor
  Please click Nomenclature to have full & clear model No.
- Sinwan reserves the right to change data and improve electrical & mechanical design without notice, data tolerance +-10%

Motor	
Motor Type:	Sinwan Brushless DC Motor MED127AN
Burnout Protection:	Electronically protected, polarity & locked rotor protection
IP Protection:	IP ratings on request
Mechanical	
Frame:	Steel plate housing and frame black coating
Impeller:	Aluminum alloy fan blades with natural treatment cosmetics
Bearing:	3 high precision permanently lubricated ball bearings
Rotation:	Motor at right side (R type), left (L type) for choice, viewed from air outlet
Connection:	Wire leads, or terminal block connecting for choice
Weight:	680g (1.5Lbs)
Electornical	
Dielectric Strength:	500 VAC/min. Max leakage 0.5mA
Speed Control:	Optional: PWM, S/C NTC thermister
Signal Output:	Optional: RD Rotation Detactor, FG Frequency Generator
Environment	
Operating Temp:	-20C~+65C
Storage Temp:	-20C~+75C (at 65%RH)
Life Expectancy:	L10 40K hours at 45℃, 20K hours at 65℃

Performance P-Q Curves

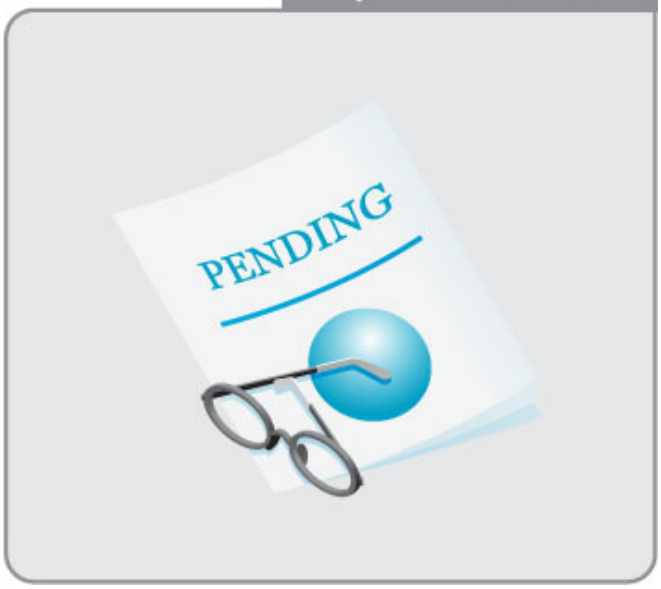

Nomenclature | R/D R/D Alarm | F/G F/G Tach | S/C S/C Function

Outline Dimensions

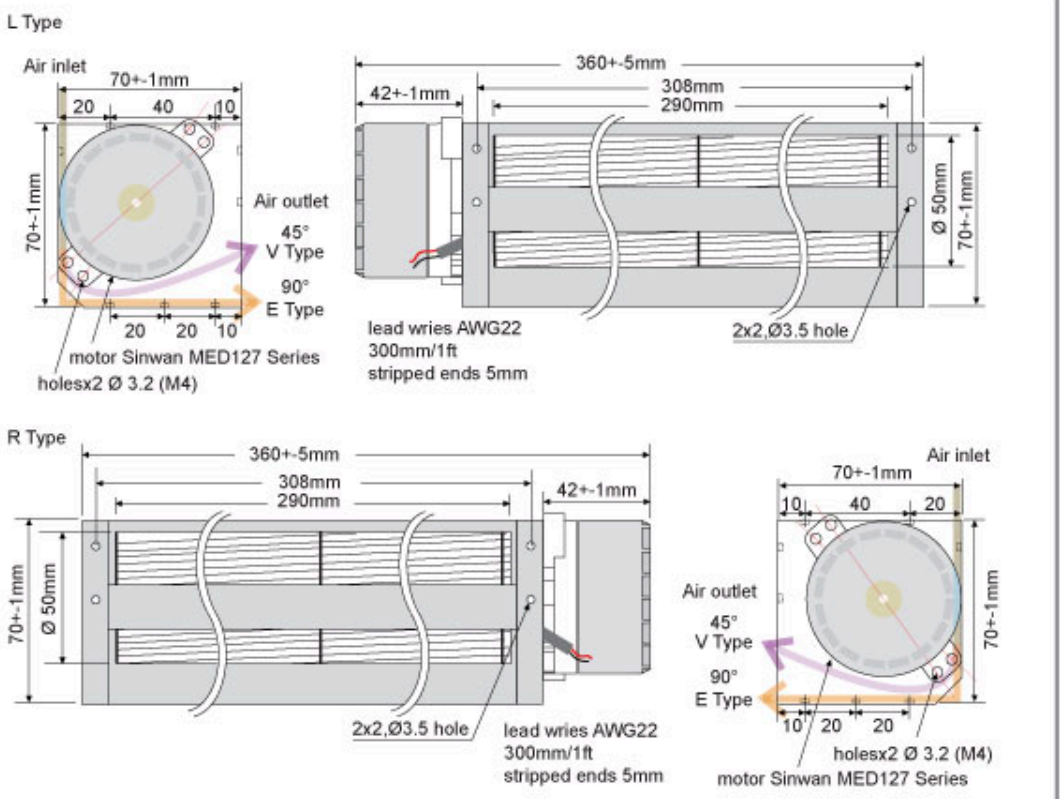

Related Products



DC Motor

MED127AN

Sinwan Electric Industries Co., Ltd. Email: sinwanfan@sinwan.com.tw TEL: +886-2-2662-0728 FAX: +886-2-2662-7019