S3G300-BK13-60

EC axial panel fan

sickle-shaped blades (S series)

with guard grille for full nozzle

ebm-papst Mulfingen GmbH & Co. KG
Bachmühle 2 · D-74673 Mulfingen
Phone +49 7938 81-0
Fax +49 7938 81-110
info1@de.ebmpapst.com
www.ebmpapst.com

Limited partnership · Headquarters Mulfingen
Amtsgericht (court of registration) Stuttgart · HRA 590344

General partner Elektrobau Mulfingen GmbH · Headquarters Mulfingen
Amtsgericht (court of registration) Stuttgart · HRB 590142

Nominal data

Type	**S3G300-BK13-60**
Motor	**M3G055-CF**

Phase		1~
Nominal voltage	VAC	230
Nominal voltage range	VAC	200 .. 240
Frequency	Hz	50/60
Method of obtaining data		ml
Speed (rpm)	min^{-1}	1500
Power consumption	W	85
Current draw	A	0.8
Max. back pressure	Pa	85
Max. back pressure	in. wg	0.34
Min. ambient temperature	°C	-25
Max. ambient temperature	°C	60

ml = Max. load · me = Max. efficiency · fa = Free air · cs = Customer specification · ce = Customer equipment
Subject to change

EC axial panel fan

sickle-shaped blades (S series)

with guard grille for full nozzle

Technical description

Weight	2 kg
Size	300 mm
Motor size	55
Rotor surface	Thick-film passivated
Terminal box material	PP plastic
Impeller material	PP plastic, galvanized sheet-metal plate
Guard grille material	Steel, coated with black plastic (RAL 9005)
Number of blades	5
Airflow direction	A
Direction of rotation	Clockwise, viewed toward rotor
Degree of protection	IP54
Insulation class	"B"
Moisture (F) / Environmental (H) protection class	H1+
Max. permitted ambient temp. for motor (transport/storage)	+80 °C
Min. permitted ambient temp. for motor (transport/storage)	-40 °C
Installation position	Shaft horizontal or rotor on bottom
Condensation drainage holes	None, open rotor
Mode	S1
Motor bearing	Ball bearing made of stainless steel
Technical features	- Output 10 VDC, max. 1.1 mA - Tach output - Power limiter - Motor current limitation - Soft start - Control input 0-10 VDC / PWM - Control interface with SELV potential safely disconnected from the mains - Overvoltage detection - Thermal overload protection for electronics/motor - Line undervoltage detection
EMC immunity to interference	According to EN 61000-6-2 (industrial environment)
EMC circuit feedback	According to EN 61000-3-2/3
EMC interference emission	According to EN 61000-6-3 (household environment)
Touch current according to IEC 60990 (measuring circuit Fig. 4, TN system)	<= 3.5 mA
Electrical hookup	Terminal box with cable
Motor protection	Electronic motor protection
With cable	Variable
Protection class assignment	I; If a protective earth is connected by the customer This component for installation may have several local protection classes. This information relates to this component's basic design. The final protection class is based on the component's intended installation and connection.
Conformity with standards	EN 60034-1; EN 60204-1; EN 60335-1; CE
Comment on CE	Ecodesign Directive 2009/125/EC + Fan Directive (EC) No. 327/2011 does not apply, as power consumption <125W.

ebm-papst Mulfingen GmbH & Co. KG · Bachmühle 2 · D-74673 Mulfingen · Phone +49 (0) 7938 81-0 · Fax +49 (0) 7938 81-110 · info1@de.ebmpapst.com · www.ebmpapst.com

EC axial panel fan

sickle-shaped blades (S series)

with guard grille for full nozzle

Product drawing

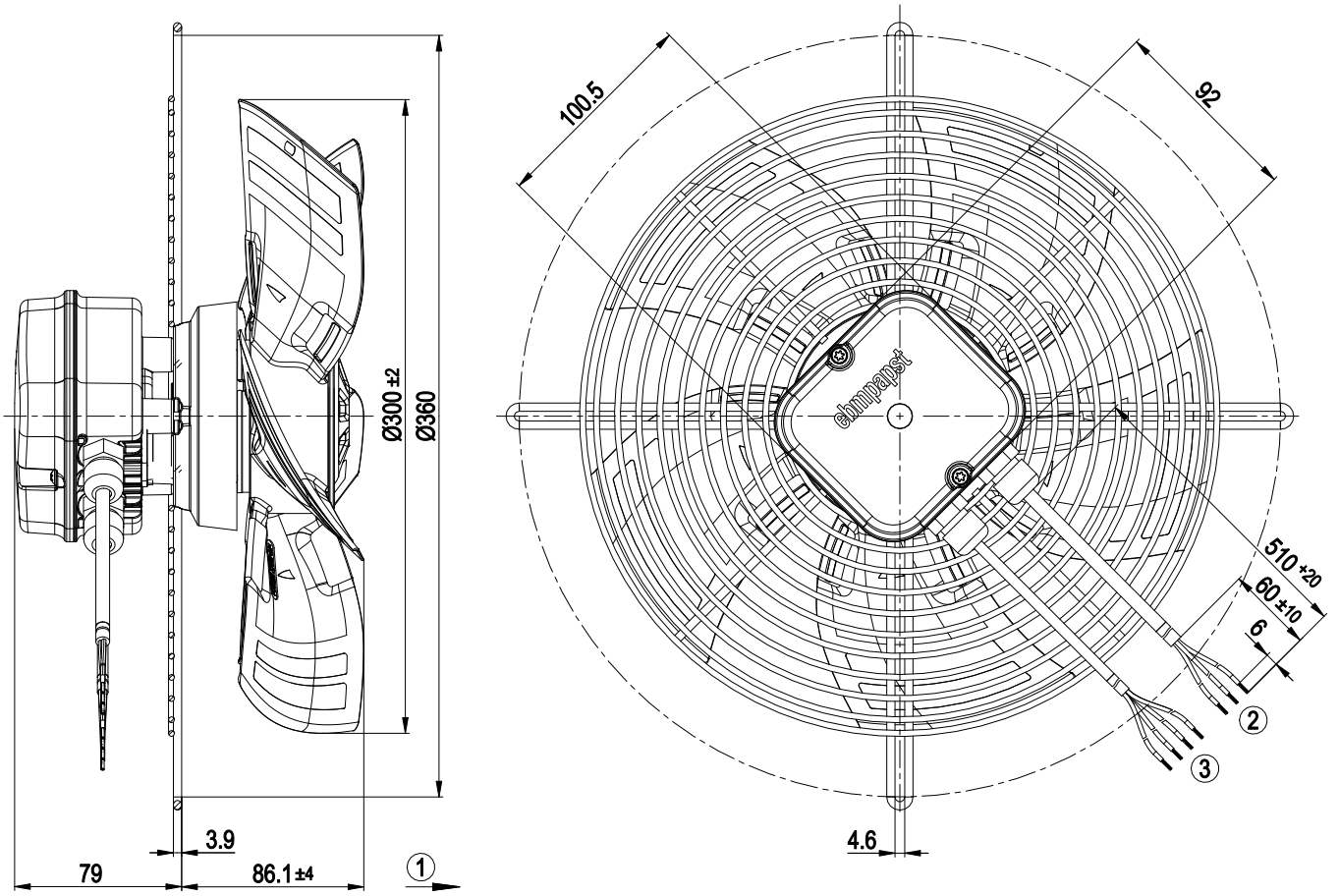

1	Direction of air flow "A"
2	Cable PVC AWG20
	3x splice
3	Cable PVC AWG22
	4x splice

ebm-papst Mulfingen GmbH & Co. KG · Bachmühle 2 · D-74673 Mulfingen · Phone +49 (0) 7938 81-0 · Fax +49 (0) 7938 81-110 · info1@de.ebmpapst.com · www.ebmpapst.com

EC axial panel fan

sickle-shaped blades (S series)

with guard grille for full nozzle

Connection diagram

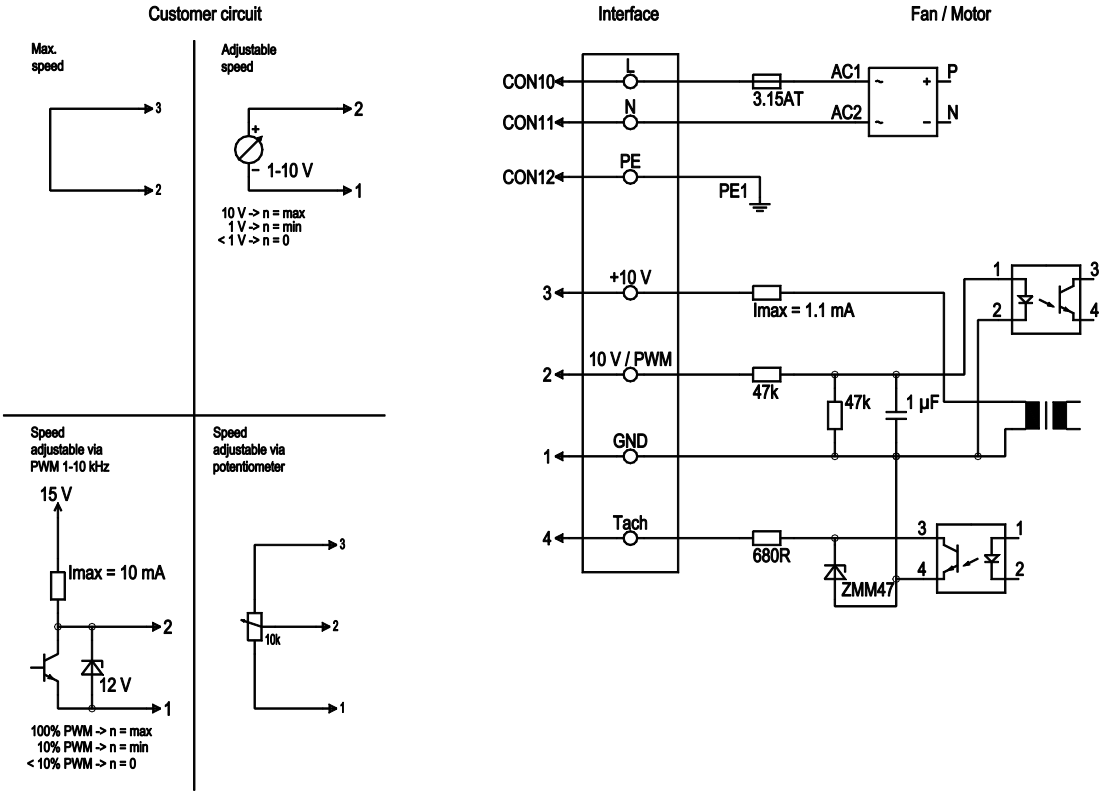

No.	Conn.	Designation	Color	Function/assignment
	CON10	L	black	Power supply 230 VAC, 50-60 Hz, see nameplate for voltage range
	CON11	N	blue	Neutral conductor
	CON12	PE	green/yellow	Protective earth
	1	GND	blue	GND connection for control interface
	2	0-10V PWM	yellow	Control input 0-10 V or PWM, electrically isolated
	3	10 V / max. 1,1 mA	red	Voltage output 10 VDC 1.1 mA, electrically isolated, short-circuit-proof
	4	Tacho	white	Tach output: open collector, 1 pulse per revolution, electrically isolated

ebm-papst Mulfingen GmbH & Co. KG · Bachmühle 2 · D-74673 Mulfingen · Phone +49 (0) 7938 81-0 · Fax +49 (0) 7938 81-110 · info1@de.ebmpapst.com · www.ebmpapst.com

EC axial panel fan

sickle-shaped blades (S series)

with guard grille for full nozzle

Curves: Air performance 50 Hz

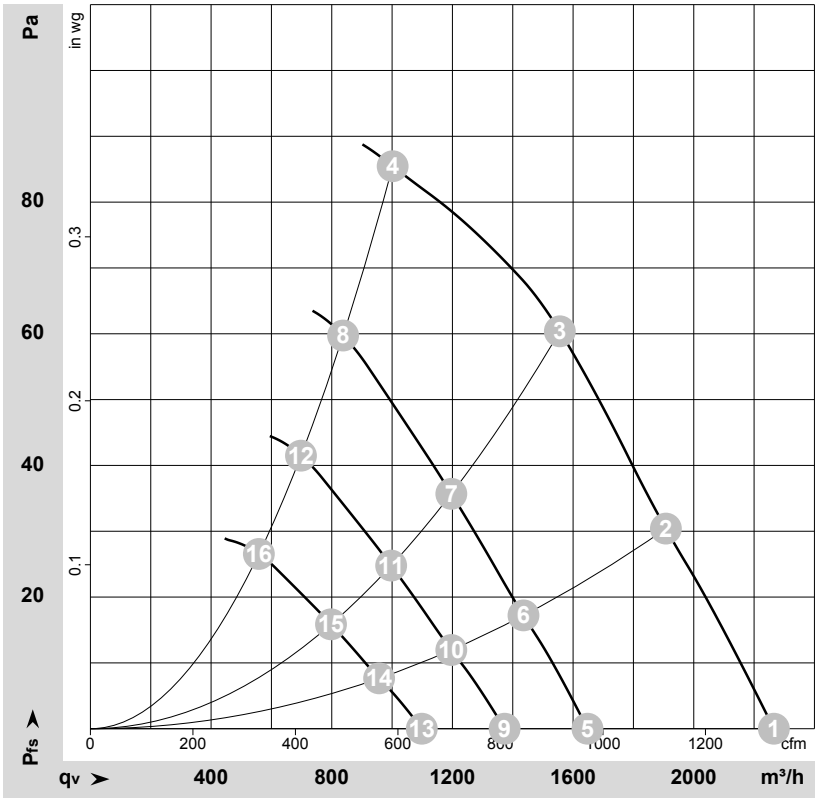

ρ = 1.15 kg/m³ ± 2 %

Measurement: LU-133717-1
Date: 2011-05-02
Housing: 18908-2-4037

Air performance measured according to ISO 5801 installation category A. For detailed information on the measurement setup, contact ebm-papst. Intake sound level: Sound power level according to ISO 13347 / sound pressure level measured at 1 m distance from fan axis. The values given are valid under the specified measuring conditions and may vary due to conditions of installation. For deviations from the standard configuration, the parameters have to be checked on the installed unit.

Measured values

	U	f	n	P_{ed}	I	LpA_{in}	LwA_{in}	q_V	p_{fs}	q_V	p_{fs}
	V	Hz	min^{-1}	W	A	dB(A)	dB(A)	m^3/h	Pa	cfm	in. wg
1	230	50	1650	72	0.63	55	63	2265	0	1335	0.00
2	230	50	1595	79	0.67	56	63	1910	30	1125	0.12
3	230	50	1560	85	0.80	54	62	1555	60	915	0.24
4	230	50	1500	85	0.80	58	67	1000	85	590	0.34
5	230	50	1200	28	0.24	47	55	1650	0	970	0.00
6	230	50	1200	33	0.29	49	56	1435	17	845	0.07
7	230	50	1200	38	0.32	48	55	1195	36	705	0.14
8	230	50	1200	48	0.41	53	62	840	60	495	0.24
9	230	50	1000	16	0.14	43	50	1375	0	810	0.00
10	230	50	1000	19	0.17	44	51	1195	12	705	0.05
11	230	50	1000	22	0.18	43	51	995	25	585	0.10
12	230	50	1000	28	0.24	49	57	700	42	410	0.17
13	230	50	800	8.0	0.07	37	45	1100	0	645	0.00
14	230	50	800	10.0	0.08	38	46	955	8	565	0.03
15	230	50	800	11	0.09	38	45	800	16	470	0.06
16	230	50	800	14	0.12	43	51	560	27	330	0.11

U = Voltage · f = Frequency · n = Speed (rpm) · P_{ed} = Power consumption · I = Current draw · LpA_{in} = Sound pressure level intake side · LwA_{in} = Sound power level intake side
q_V = Air flow · p_{fs} = Pressure increase

ebm-papst Mulfingen GmbH & Co. KG · Bachmühle 2 · D-74673 Mulfingen · Phone +49 (0) 7938 81-0 · Fax +49 (0) 7938 81-110 · info1@de.ebmpapst.com · www.ebmpapst.com