26106 Rubber buffers steel or stainless steel type D cylindrical with external thread

Item description/product images



Description

Material:
Metal parts, steel grade 5.6 or stainless steel.
Elastomer natural rubber soft (Shore 40A), medium (Shore 55A) and hard (Shore 70A).

Version:
Steel galvanised.
Stainless steel bright.

Note:
Rubber buffers are used, among other things for mounting aggregates and as elastic buffers to limit the travel of moving masses.
Due to the material composition, rubber buffers are contact-colouring, which can lead to abrasion marks and discolouration on e.g. floors or contact surfaces.
Rubber buffers made of light grey EPDM that are not contact-colouring are available on request.

Temperature range:
-30 °C to +80 °C

On request:
Other Shore grades.

Drawings

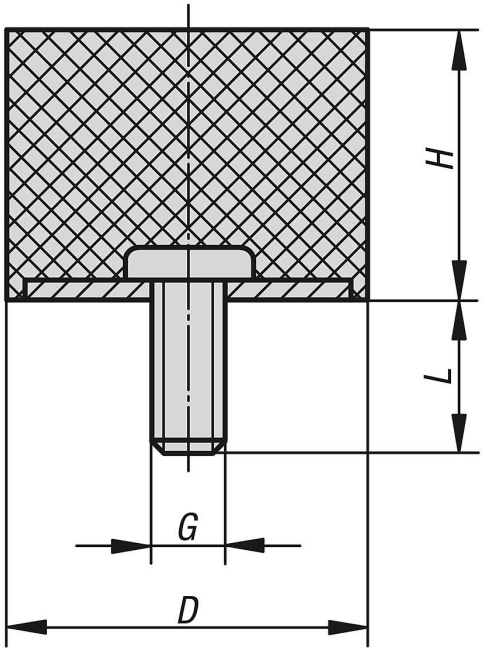

Overview of items

Rubber buffers, steel or stainless steel, type D

Order No.	Main material	D	H	G	L	Shore grade	Spring stiffness N/mm	Load N
26106-00800840	steel	8	8	M3	6	40A	20	20

26106 Rubber buffers steel or stainless steel type D cylindrical with external thread

norelem

Overview of items

Order No.	Main material	D	H	G	L	Shore grade	Spring stiffness N/mm	Load N
26106-01001540	steel	10	15	M4	10	40A	30	30
26106-01001040	steel	10	10	M4	10	40A	22	22
26106-01501040	steel	15	10	M4	10	40A	50	50
26106-01500840	steel	15	8	M4	10	40A	97	97
26106-01501540	steel	15	15	M4	10	40A	30	60
26106-02001040	steel	20	10	M6	18	40A	115	115
26106-02002540	steel	20	25	M6	18	40A	30	105
26106-02501540	steel	25	15	M6	18	40A	100	200
26106-02503040	steel	25	30	M6	18	40A	35	140
26106-02500840	steel	25	8	M6	18	40A	300	300
26106-02002040	steel	20	20	M6	18	40A	40	120
26106-02000540	steel	20	5	M6	18	40A	100	100
26106-02000840	steel	20	8	M6	18	40A	140	140
26106-02501040	steel	25	10	M6	18	40A	270	270
26106-02001540	steel	20	15	M6	18	40A	55	110
26106-02502540	steel	25	25	M6	18	40A	45	157,5
26106-02502040	steel	25	20	M6	18	40A	60	180
26106-03002040	steel	30	20	M8	23	40A	90	270
26106-04002040	steel	40	20	M8	23	40A	200	600
26106-04003040	steel	40	30	M8	23	40A	100	400
26106-03002540	steel	30	25	M8	23	40A	60	210
26106-03003040	steel	30	30	M8	23	40A	45	180
26106-03001540	steel	30	15	M8	23	40A	150	300
26106-04001540	steel	40	15	M8	23	40A	170	240
26106-04004040	steel	40	40	M8	23	40A	65	390
26106-03004040	steel	30	40	M8	23	40A	60	360
26106-05004040	steel	50	40	M10	28	40A	146	876
26106-06004040	steel	60	40	M10	28	40A	185	1110
26106-05002040	steel	50	20	M10	28	40A	442	1326
26106-07004540	steel	70	45	M10	28	40A	270	1890
26106-05003040	steel	50	30	M10	28	40A	232	928
26106-05005040	steel	50	50	M10	28	40A	100	800
26106-07002540	steel	70	25	M10	28	40A	525	1838
26106-07505040	steel	75	50	M12	37	40A	232	1856
26106-07502540	steel	75	25	M12	37	40A	606	2121
26106-07504040	steel	75	40	M12	37	40A	357	2142
26106-07505540	steel	75	55	M12	37	40A	152	1520
26106-00800855	steel	8	8	M3	6	55A	40	40
26106-01001055	steel	10	10	M4	10	55A	35	35
26106-01001555	steel	10	15	M4	10	55A	26	40
26106-01500655	steel	15	6	M4	10	55A	175	88
26106-01500855	steel	15	8	M4	10	55A	187	187
26106-01501055	steel	15	10	M4	10	55A	100	100
26106-01501555	steel	15	15	M4	10	55A	50	100
26106-02000555	steel	20	5	M6	18	55A	135	95
26106-02000855	steel	20	8	M6	18	55A	250	250
26106-02001055	steel	20	10	M6	18	55A	240	240
26106-02001555	steel	20	15	M6	18	55A	110	220
26106-02002055	steel	20	20	M6	18	55A	75	225
26106-02002555	steel	20	25	M6	18	55A	65	227,5
26106-02500855	steel	25	8	M6	18	55A	850	850
26106-02501055	steel	25	10	M6	18	55A	400	400
26106-02501555	steel	25	15	M6	18	55A	210	420
26106-02502055	steel	25	20	M6	18	55A	140	420
26106-02502555	steel	25	25	M6	18	55A	100	350
26106-02503055	steel	25	30	M6	18	55A	79	316
26106-03001555	steel	30	15	M8	23	55A	270	540
26106-03002055	steel	30	20	M8	23	55A	238	714
26106-03002555	steel	30	25	M8	23	55A	153	535,5
26106-03003055	steel	30	30	M8	23	55A	127	508
26106-03004055	steel	30	40	M8	23	55A	88	528
26106-04001555	steel	40	15	M8	23	55A	710	1420
26106-04002055	steel	40	20	M8	23	55A	365	1095
26106-04003055	steel	40	30	M8	23	55A	205	820
26106-04004055	steel	40	40	M8	23	55A	143	858

26106 Rubber buffers steel or stainless steel type D cylindrical with external thread

norelem

Overview of items

Order No.	Main material	D	H	G	L	Shore grade	Spring stiffness N/mm	Load N
26106-05002055	steel	50	20	M10	28	55A	646	1938
26106-05003055	steel	50	30	M10	28	55A	354	1416
26106-05004055	steel	50	40	M10	28	55A	230	1380
26106-05005055	steel	50	50	M10	28	55A	160	1280
26106-06004055	steel	60	40	M10	28	55A	317	1902
26106-07002555	steel	70	25	M10	28	55A	980	3430
26106-07004555	steel	70	45	M10	28	55A	438	3066
26106-07502555	steel	75	25	M12	37	55A	1318	4613
26106-07504055	steel	75	40	M12	37	55A	643	3858
26106-07505055	steel	75	50	M12	37	55A	472	3776
26106-07505555	steel	75	55	M12	37	55A	310	3100
26106-00800870	steel	8	8	M3	6	70A	81	81
26106-01500870	steel	15	8	M4	10	70A	295	295
26106-01501070	steel	15	10	M4	10	70A	200	200
26106-01501570	steel	15	15	M4	10	70A	100	200
26106-01001070	steel	10	10	M4	10	70A	70	70
26106-01001570	steel	10	15	M4	10	70A	60	60
26106-02500870	steel	25	8	M6	18	70A	800	800
26106-02502070	steel	25	20	M6	18	70A	230	690
26106-02001570	steel	20	15	M6	18	70A	200	400
26106-02503070	steel	25	30	M6	18	70A	126	504
26106-02000570	steel	20	5	M6	18	70A	300	300
26106-02002070	steel	20	20	M6	18	70A	150	450
26106-02501070	steel	25	10	M6	18	70A	680	680
26106-02000870	steel	20	8	M6	18	70A	450	450
26106-02002570	steel	20	25	M6	18	70A	90	315
26106-02501570	steel	25	15	M6	18	70A	350	700
26106-02502570	steel	25	25	M6	18	70A	170	595
26106-02001070	steel	20	10	M6	18	70A	410	410
26106-03002070	steel	30	20	M8	23	70A	350	1050
26106-04002070	steel	40	20	M8	23	70A	800	2400
26106-03002570	steel	30	25	M8	23	70A	250	875
26106-04003070	steel	40	30	M8	23	70A	400	1600
26106-04004070	steel	40	40	M8	23	70A	270	1620
26106-03003070	steel	30	30	M8	23	70A	180	720
26106-03004070	steel	30	40	M8	23	70A	140	840
26106-03001570	steel	30	15	M8	23	70A	580	1160
26106-04001570	steel	40	15	M8	23	70A	1000	2000
26106-06004070	steel	60	40	M10	28	70A	580	3480
26106-05003070	steel	50	30	M10	28	70A	732	2928
26106-07004570	steel	70	45	M10	28	70A	641	4487
26106-05002070	steel	50	20	M10	28	70A	1346	4038
26106-07002570	steel	70	25	M10	28	70A	1900	6650
26106-05005070	steel	50	50	M10	28	70A	335	2680
26106-05004070	steel	50	40	M10	28	70A	446	2676
26106-07505570	steel	75	55	M12	37	70A	772	7720
26106-07502570	steel	75	25	M12	37	70A	2106	7371
26106-07504070	steel	75	40	M12	37	70A	1125	6750
26106-07505070	steel	75	50	M12	37	70A	1035	8280
26106-008008401	stainless steel	8	8	M3	6	40A	20	20
26106-015015401	stainless steel	15	15	M4	10	40A	30	60
26106-010010401	stainless steel	10	10	M4	10	40A	22	22
26106-025020401	stainless steel	25	20	M6	18	40A	60	180
26106-030030401	stainless steel	30	30	M8	23	40A	45	180
26106-040030401	stainless steel	40	30	M8	23	40A	100	400
26106-008008551	stainless steel	8	8	M3	8	55A	40	40
26106-030030551	stainless steel	30	30	M8	23	55A	127	508
26106-040030551	stainless steel	40	30	M8	23	55A	205	820
26106-010010551	stainless steel	10	10	M4	10	55A	35	35
26106-015015551	stainless steel	15	15	M4	10	55A	50	100
26106-020015551	stainless steel	20	15	M6	18	55A	110	220
26106-025020551	stainless steel	25	20	M6	18	55A	140	420
26106-008008701	stainless steel	8	8	M3	6	70A	81	81
26106-010010701	stainless steel	10	10	M4	10	70A	70	70
26106-015015701	stainless steel	15	15	M4	10	70A	100	200

26106 Rubber buffers steel or stainless steel type D cylindrical with external thread

Overview of items

Order No.	Main material	D	H	G	L	Shore grade	Spring stiffness N/mm	Load N
26106-025020701	stainless steel	25	20	M6	18	70A	230	690
26106-030030701	stainless steel	30	30	M8	23	70A	180	720
26106-040030701	stainless steel	40	30	M8	23	70A	400	1600