DATA SHEET

Three Phase Induction Motor - Squirrel Cage

Customer	:

Product line	: Premium Efficiency IE3 Alumínio Multimontagem Multitensão
Product code	: 13749653

Frame	: 71
Output	: 0.55 kW (0.75 HP)
Poles	: 2
Frequency	: 50 Hz
Rated voltage	: 230/400 V
Rated current	: 2.07/1.19 A
L. R. Amperes	: 11.6/6.66 A
LRC	: 5.6
No load current	: 1.10/0.630 A
Rated speed	: 2835 rpm
Slip	: 5.50 %
Rated torque	: 1.85 Nm
Locked rotor torque	: 260 %
Pull up torque	: 220 %
Breakdown torque	: 270 %
Insulation class	: F
Service factor	: 1.00
Moment of inertia (J)	: 0.0005 kgm²

Locked rotor time	: 18 s (hot) 32 s (cold)
Temperature rise[4]	: 80 K
Duty cycle	: S1
Ambient temperature	: -20 °C to +40 °C
Altitude	: 1000 m.a.s.l
Protection degree	: IP55
Cooling method	: IC411 - TEFC
Mounting	: B5T
Rotation[1]	: Both
Noise level[2]	: 56 dB(A)
Starting method	: Direct On Line
Approx. weight[3]	: 7.0 kg
Design	: N

Output	Start	50%	75%	100%
Efficiency (%)	-	75.0	76.0	77.8
Power Factor	0.87	0.65	0.77	0.85

Load type	: -
Load torque	: -
Load inertia (J=GD²/4)	: -

	Drive end	Non drive end
Bearing type	6202-ZZ	6202-ZZ
Lubrication interval	-	-
Lubricant amount	-	-
Lubricant type	MOBIL POLYREX EM	

Foundation loads	
Max. traction	: 144 N
Max. compression	: 213 N

Notes:

Losses at normative operating points (speed;torque), in percentage of rated output power

P1 (0,9;1,0)	P2 (0,5;1,0)	P3 (0,25;1,0)	P4 (0,9;0,5)	P5 (0,5;0,5)	P6 (0,5;0,25)	P7 (0,25;0,25)
28.79	27.94	26.64	14.31	10.09	6.97	4.89

Standards

Specification	: IEC 60034-1	Vibration	: IEC 60034-14
Test	: IEC 60034-2	Tolerance	: IEC 60034-1
Noise	: IEC 60034-9		

This revision replaces and cancel the previous one, which must be eliminated..
(1) Looking the motor from the shaft end.
(2) Measured at 1m and with tolerance of +0dB(A).
(3) Approximate weight, subject to be changed after manufacturing process.
(4) At 100% of full load.

These are average values based on tests with sinusoidal power supply, subject to the tolerances stipulated in IEC 60034-1.

Rev.	Changes Summary	Performed	Checked	Date
				2026/11/23

Performed by				
Checked by			Page	Revision
Date	2026/11/23		1/4	0

This document is exclusive property of WEG S/A. Reprinting is not allowed without written authorization of WEG S/A.

TORQUE AND CURRENT VS SPEED CURVE

Three Phase Induction Motor - Squirrel Cage

Customer	:
Product line	: Premium Efficiency IE3 Alumínio Multimontagem Multitensão
Product code	: 13749653

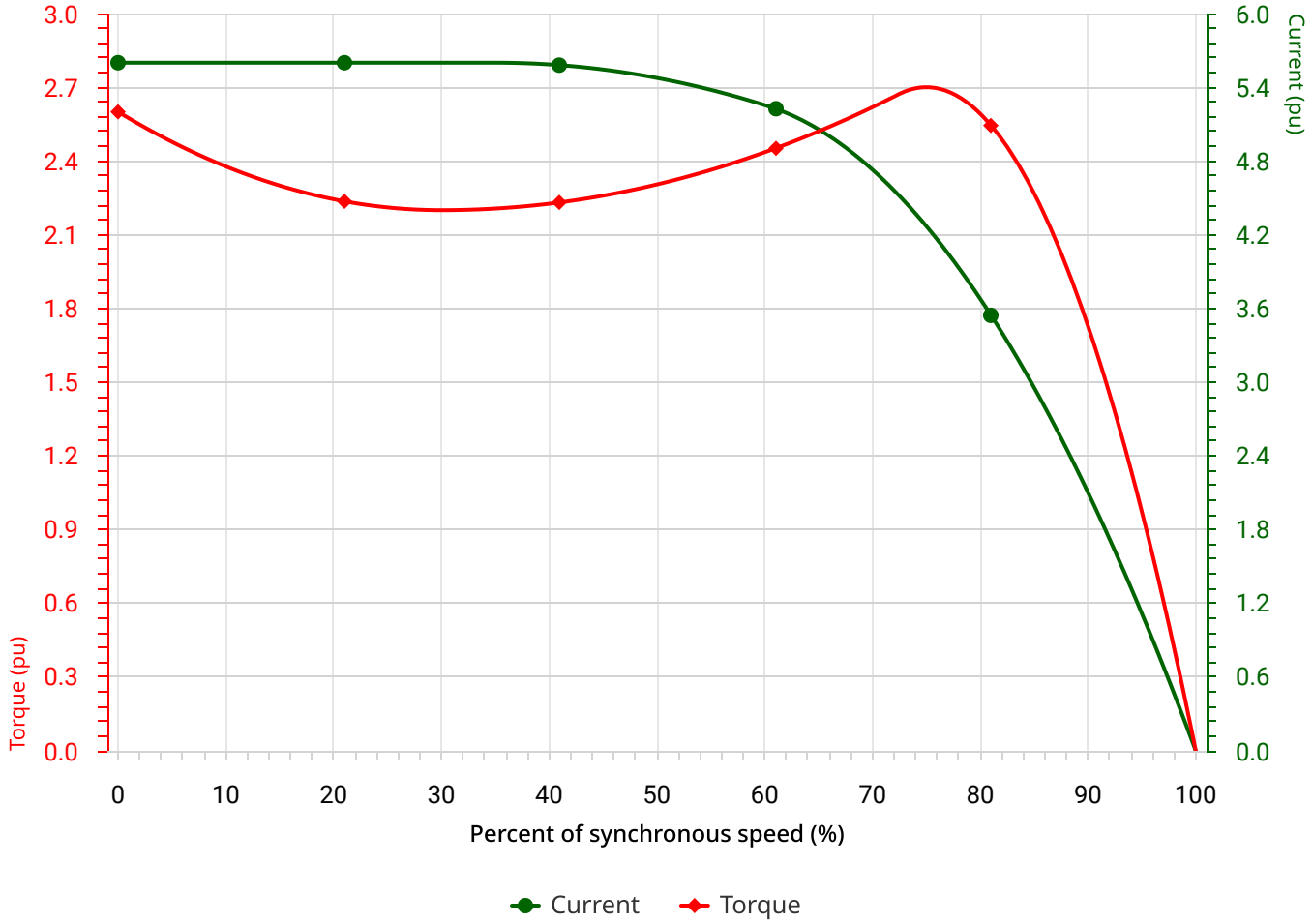

Performance	: 0.55 kW (0.75 HP) 230/400V 50Hz 2P 71

Rated current	: 2.07/1.19 A	Moment of inertia (J)	: 0.0005 kgm²
LRC	: 5.6	Duty cycle	: S1
Rated torque	: 1.85 Nm	Insulation class	: F
Locked rotor torque	: 260 %	Service factor	: 1.00
Breakdown torque	: 270 %	Temperature rise	: 80 K
Rated speed	: 2835 rpm	Design	: N

Locked rotor time 100%	: 18 s (hot) 32 s (cold)
Allowable run up time 100%	: 14 s (hot) 26 s (cold)
Load Inertia (J=GD²/4)	: 0.0005 kgm²

Rev.	Changes Summary	Performed	Checked	Date
				2026/11/23

Performed by				
Checked by			Page	Revision
Date	2026/11/23		2/4	0

This document is exclusive property of WEG S/A. Reprinting is not allowed without written authorization of WEG S/A.

LOAD PERFORMANCE CURVE

Three Phase Induction Motor - Squirrel Cage

Customer	:
Product line	: Premium Efficiency IE3 Alumínio Multimontagem Multitensão
Product code	: 13749653

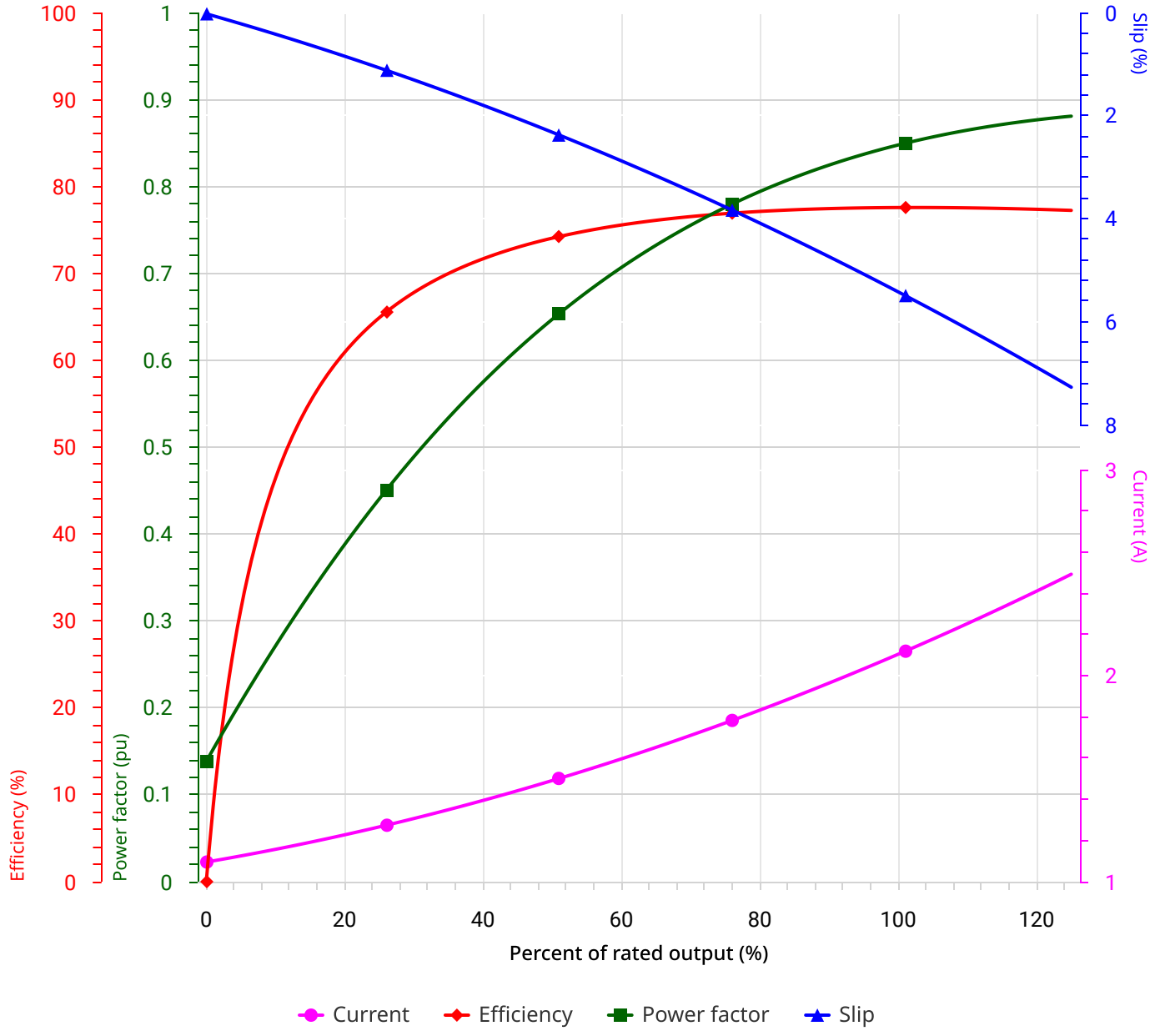

Performance	: 0.55 kW (0.75 HP) 230/400V 50Hz 2P 71

Rated current	: 2.07/1.19 A	Moment of inertia (J)	: 0.0005 kgm²
LRC	: 5.6	Duty cycle	: S1
Rated torque	: 1.85 Nm	Insulation class	: F
Locked rotor torque	: 260 %	Service factor	: 1.00
Breakdown torque	: 270 %	Temperature rise	: 80 K
Rated speed	: 2835 rpm	Design	: N

Rev.	Changes Summary	Performed	Checked	Date
				2026/11/23

Performed by				
Checked by			Page	Revision
Date	2026/11/23		3/4	0

This document is exclusive property of WEG S/A. Reprinting is not allowed without written authorization of WEG S/A.

THERMAL LIMIT CURVE

Three Phase Induction Motor - Squirrel Cage

Customer	:

Product line	: Premium Efficiency IE3 Alumínio Multimontagem Multitensão
Product code	: 13749653

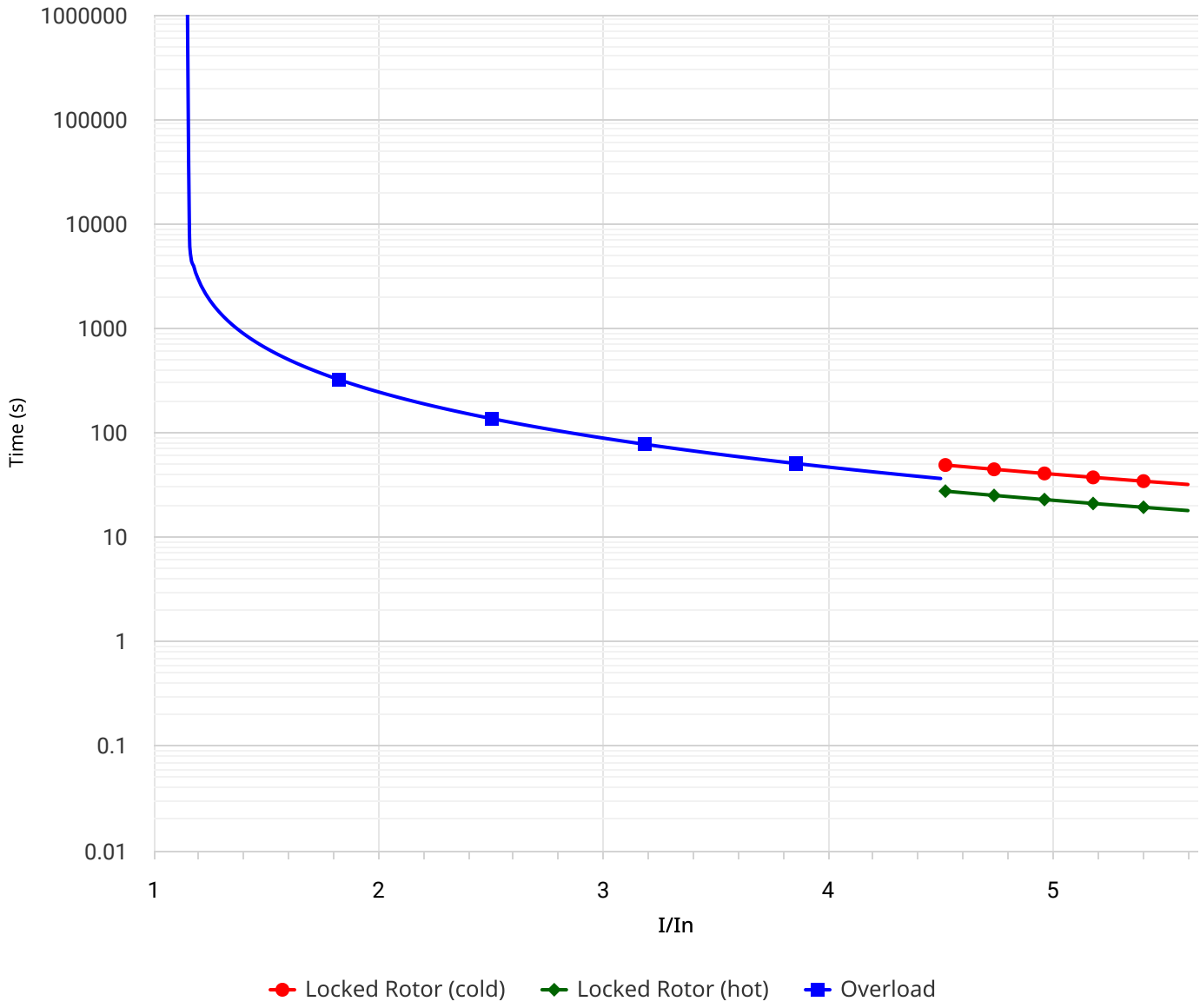

Performance	: 0.55 kW (0.75 HP) 230/400V 50Hz 2P 71

Rated current	: 2.07/1.19 A	Moment of inertia (J)	: 0.0005 kgm²
LRC	: 5.6	Duty cycle	: S1
Rated torque	: 1.85 Nm	Insulation class	: F
Locked rotor torque	: 260 %	Service factor	: 1.00
Breakdown torque	: 270 %	Temperature rise	: 80 K
Rated speed	: 2835 rpm	Design	: N

Heating constant	: 11.9 min
Cooling constant	: 35.7 min

Rev.	Changes Summary	Performed	Checked	Date
				2026/11/23

Performed by				
Checked by			Page	Revision
Date	2026/11/23		4/4	0

This document is exclusive property of WEG S/A. Reprinting is not allowed without written authorization of WEG S/A.

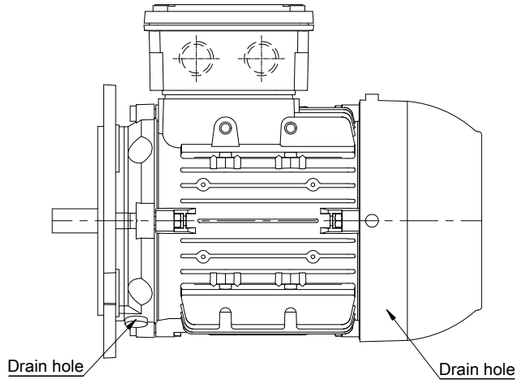

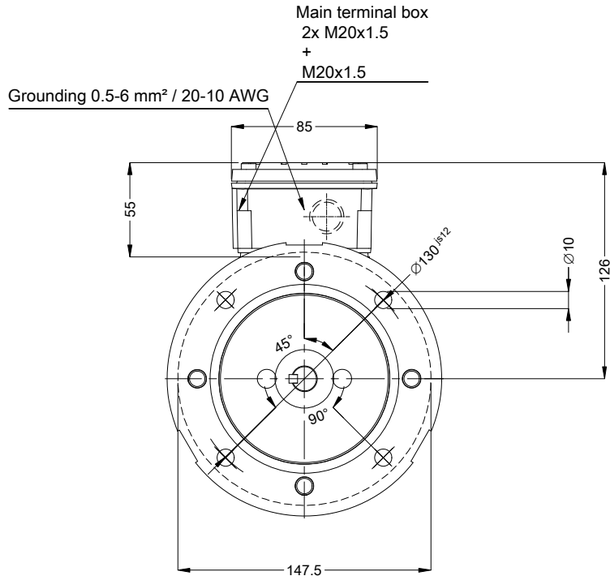

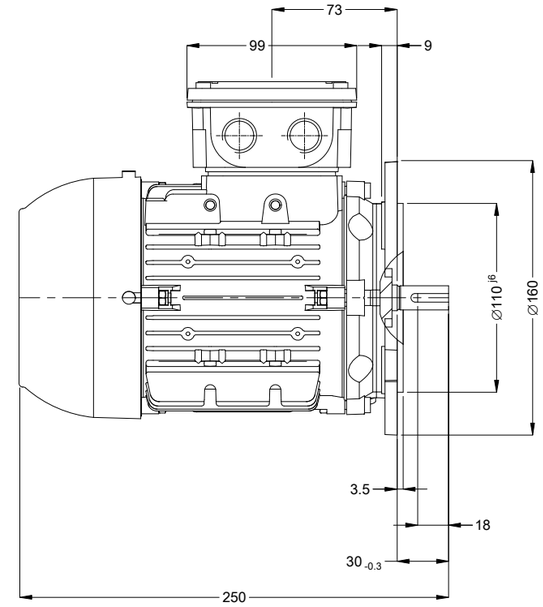

NDE sealing - lip seal
Sealing - oil seal ring
Bearing cap
Thermal protection to switch off - thermistors 155°C
Color RAL 5009
Painting plan 207A
Mounting B5T

DE Shaft End

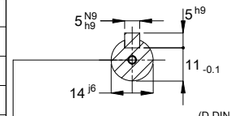

DM5 WEG WPR-7339

0.55 kW 02 Poles 50 Hz | A

Scale 2 : 7

ECM	LOC	SUMMARY OF MODIFICATIONS	EXECUTED	CHECKED	RELEASED	DATE	VER
			HYBRISUSER				00

EXECUTED	HYBRISUSER
CHECKED	
RELEASED	
REL. DATE	

THREE PH. MOTOR MULTIMOUNTIN TOP PREM. EFF.
FRAME 71 IP55 TEFC

PREVIEW

WDD 00

SHEET 1 / 1

Dimensions in mm

A3

WEG's property. Forbidden reproduction without previous authorization.