3SV27F030T/D | Configuration Summary



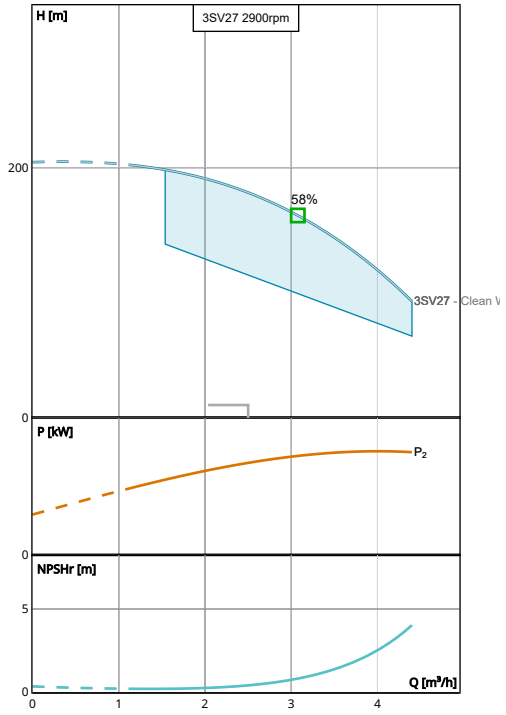

Performance according to ISO 9906:2012

The Lowara e-SV vertical multistage pump is a highly reliable and technologically advanced multipurpose pump. It's capable of satisfying the needs of a wide variety of users and many different construction designs are available. The e-SV range feature models in eleven sizes with 1-3-5-10-15-22-33-46-66-92-125 m³/h nominal capacities.

PUMP

Installation	Pump Size
Complete Pump	3SV

MATERIALS

Pump Body Material	Impeller Material
Stainless Steel (AISI 304)	Stainless Steel (AISI 304)

SEAL

Type of Seal	Rotating Face
Mechanical Seals	Silicon Carbide
Name	**Stationary Face**
Q1BEGG	Resin Impregnated Carbon
	Elastomers
	EPDM
	Springs
	AISI 316
	Metal Components
	AISI 316
	Min Temperature
	-30.0 °C
	Max Temperature
	120.0 °C

STANDARD OPTIONS

PTC Sensor	Special Configuration
No	Please Select

MOTOR

Vendor	Power
Lowara PLM	3 kW
Frequency (Hz)	**Phase (~)**
50	3
Poles	**Voltage**
2	220-240/380-415 V
Efficiency	**Frame Size**
IE3	100 L

FLANGE

Flange

[F] = Round Flanges (AISI 304)

3SV27F030T/D | Product Details

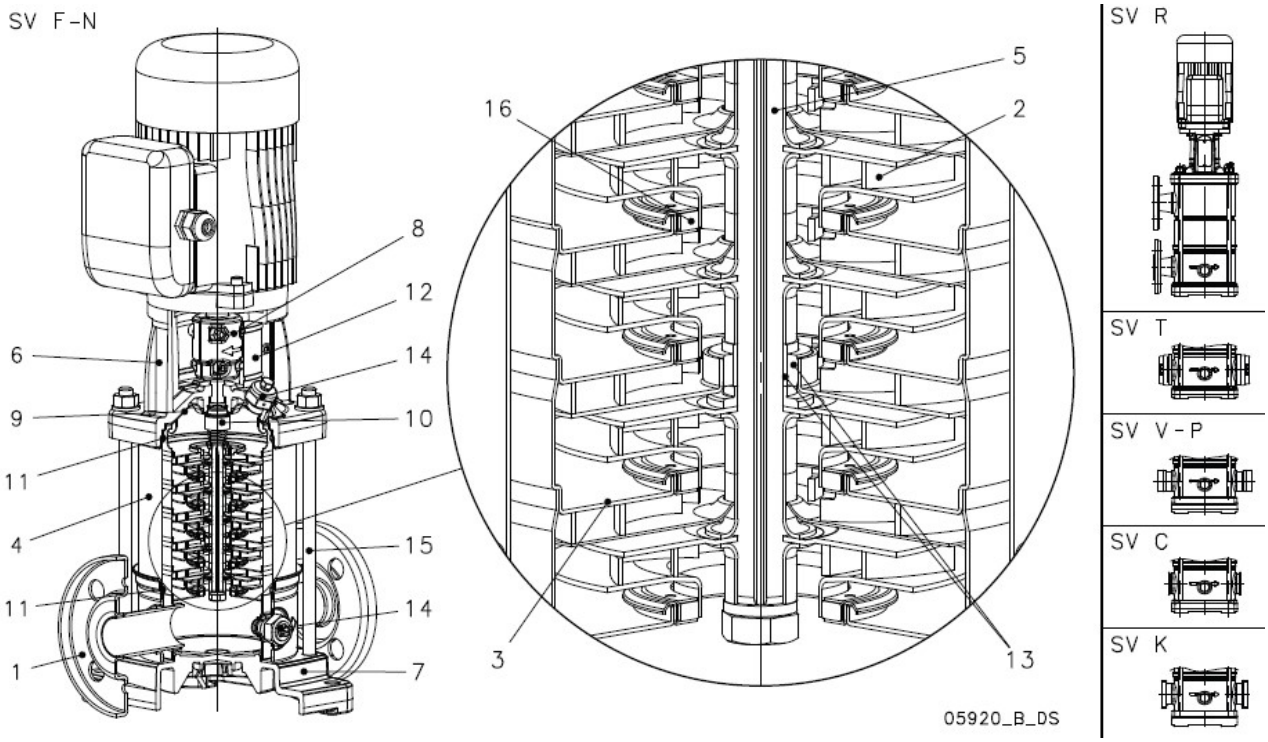

Construction Materials

Pump body (1) Stainless steel / AISI 304	Shaft (5) Stainless steel / AISI 304	Seal housing (9) Stainless steel / AISI 304	Shaft sleeve and bushing (13) Tungsten carbide
Impeller (2) Stainless steel / AISI 304	Adapter (6) Cast Iron / ASTM Class 35	Mechanical seal (10) See Seal section	Fill / Drain plugs (14) Stainless steel / AISI 304
Diffuser (3) Stainless steel / AISI 304	Base (7) Aluminium	Elastomers (11) See Seal section	Tie rods (15) Galvanized steel
Outer sleeve (4) Stainless steel / AISI 304	Coupling (8) Aluminium	Coupling protection (12) Stainless steel / AISI 304	Wear ring (16) Technopolymer PPS

Motor

Motor Name PLM 100R B14 3 kW	Phase 3	IE Class IE3	Frame Size 100 L
Design IM B14	Rated power 3 kW	Enclosure IP 55	ICL F
Standard IEC	Service Factor 1	Efficiency (%) 87.5	Motor Vendor PLM
Shaft Diameter 28 mm	Voltage 220-240/380-415 V	cos phi 0.79	Weight 21 kg
L Shaft 60 mm	Speed 2865.0 rpm	Rated Current 11-6.33 A	

3SV27F030T/D | Hydraulic Data & Performance Curve

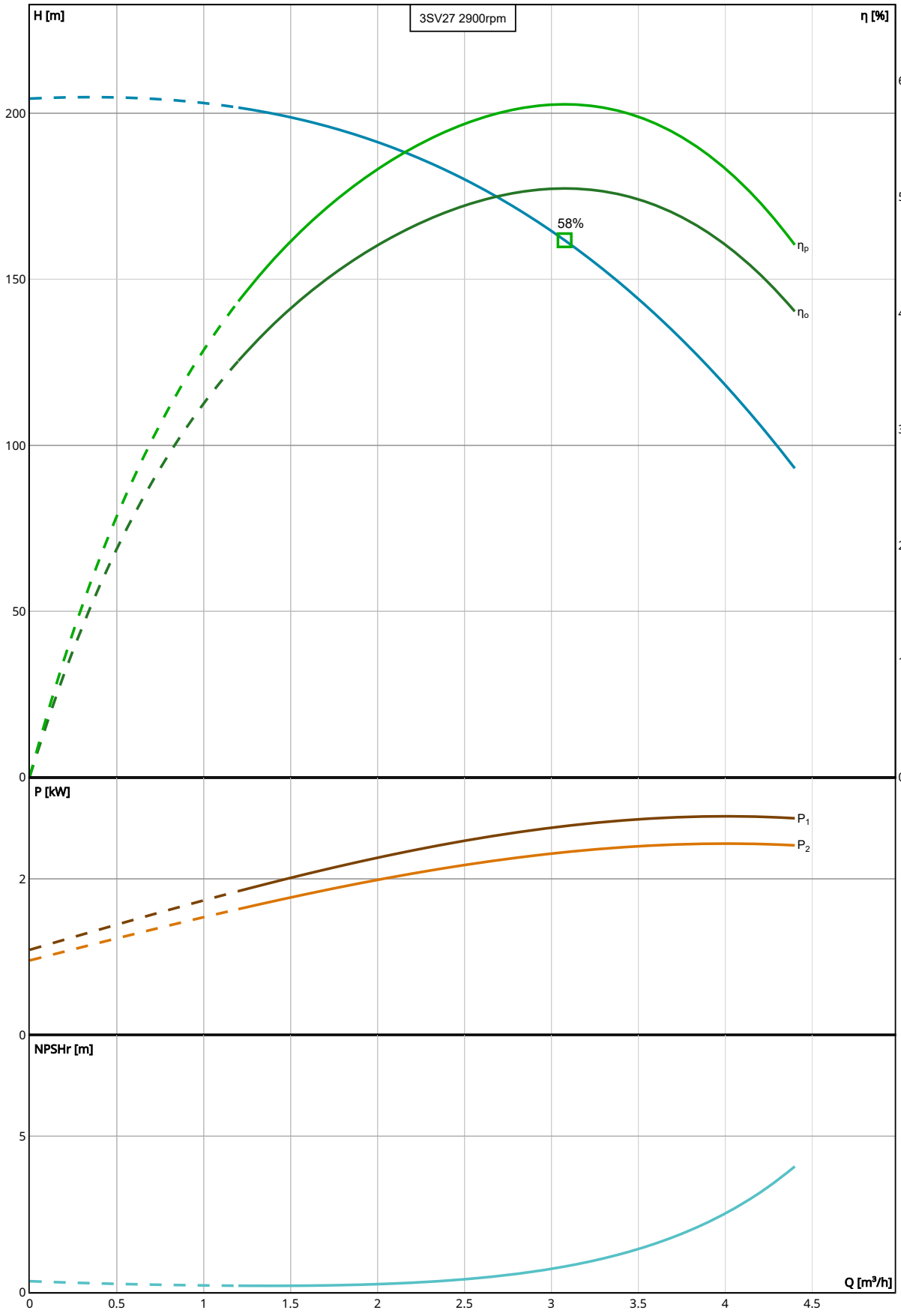

Performance according to ISO 9906:2012

Project:	Created By:	Created On:	Last Update:
3SV27F030T/D	Каролина Карл-Стоева	24.11.26 г.	-

Selection

Series
e-SV

Name
3SV27 2900rpm

Stages
27

Frequency
50 Hz

Impeller Diameters
27x 79 mm

Pump Flow
2.4 l/s

Pump Head
10 m

Acceptance Grade
Manufacturer's Standard

System Type
Single Pump

Operating Pumps
1

Standby Pumps
No Standby Pump

Fluid and Operating Conditions

Fluid Type
Water

Fluid Service

Fluid Name

Fluid Temperature
4 °C

Specific Gravity
1

Density
1,000 kg/m³

Dynamic Viscosity
0.002 Pa·s

Fluid Vapor Pressure
8.14 mbar

Atmospheric Pressure
1,013.53 mbar

Elevation
0 m

Ambient Temperature
0 °C

NPSH Available
10.27 m

Submergence
0 m

Design Curve

Rated Speed
2,900 RPM

Min Flow
1.2 m³/h

Max Flow
4.4 m³/h

H@QMin
201.7 m

H@QMax
93.08 m

BEP
57.97 %

BEP Flow
3.08 m³/h

BEP Head
161.76 m

Max Operating Pressure
20,058.53 mbar

Shut Off Head
204.41 m

Max P2
2.45 kW

3SV27F030T/D | Dimensional Data & Drawing

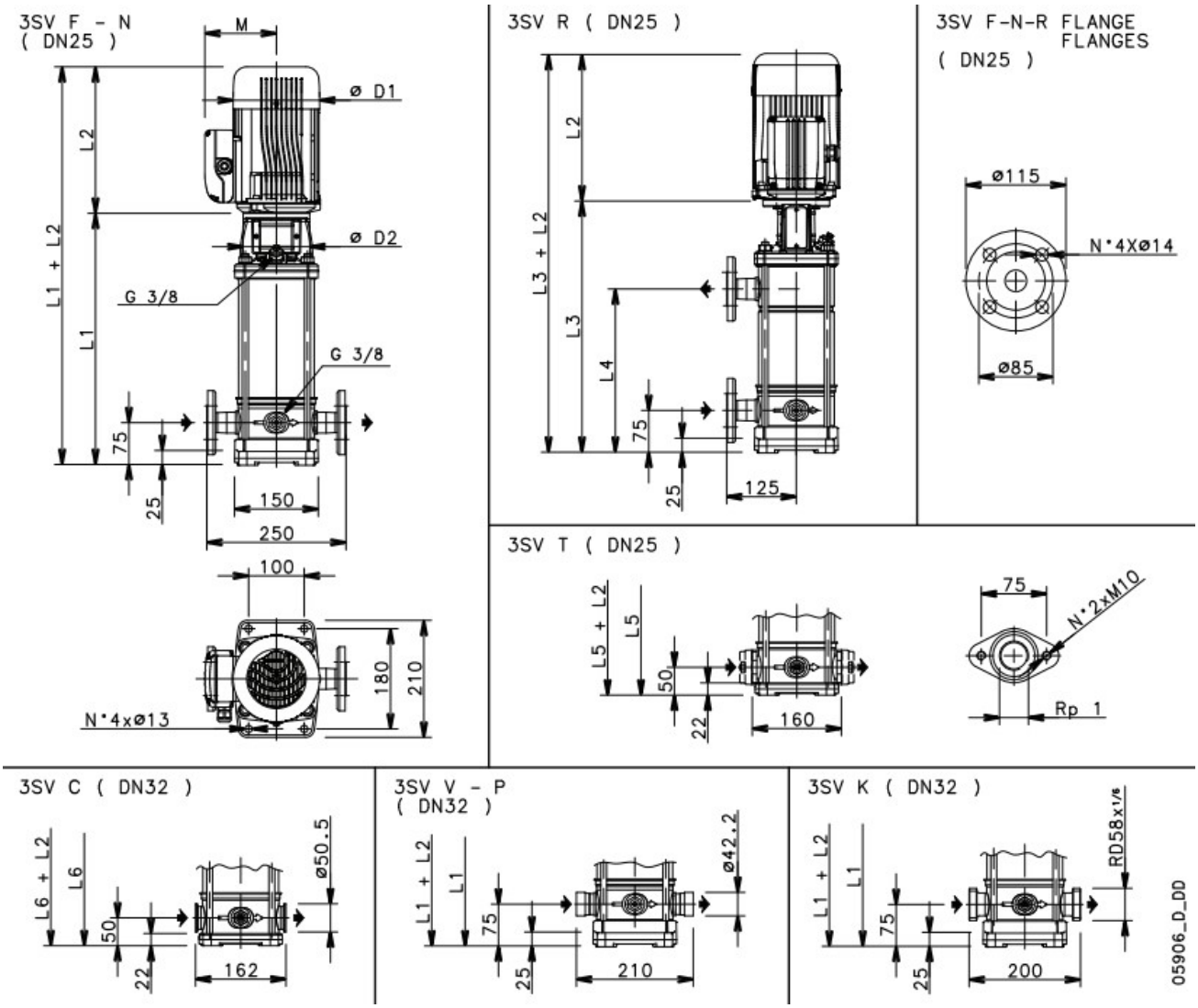

Drawing is preliminary and is subject to change.

Dimensions

D1 174 mm	M 134 mm
D2 160 mm	PN 25
L1 788 mm	Weight (Pump Only) 20.7 kg
L2 298 mm	Total Weight 42.6 kg