DD-12/12

Technical Data

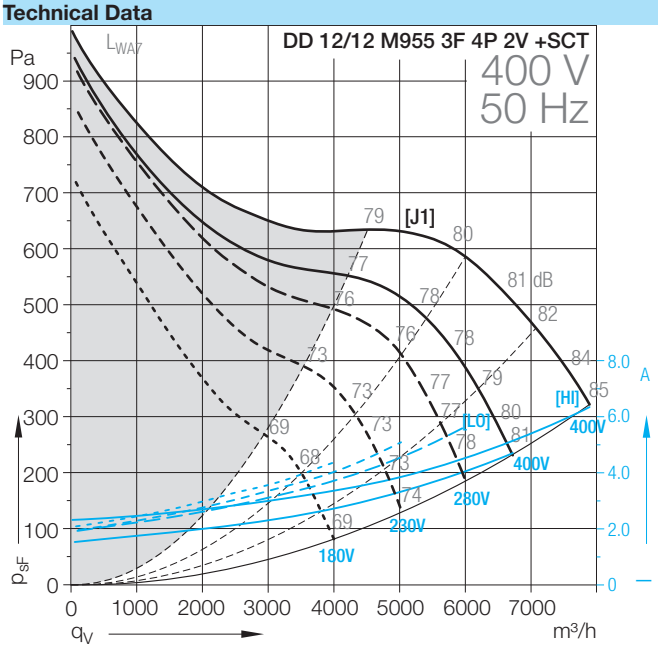

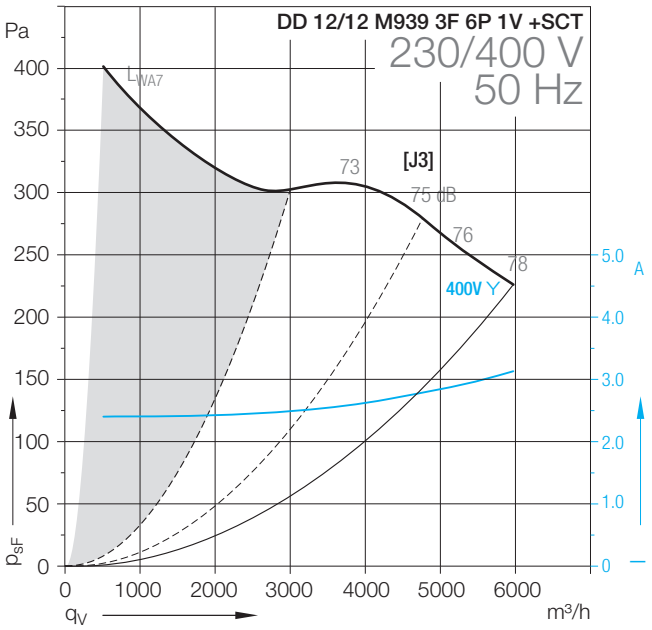

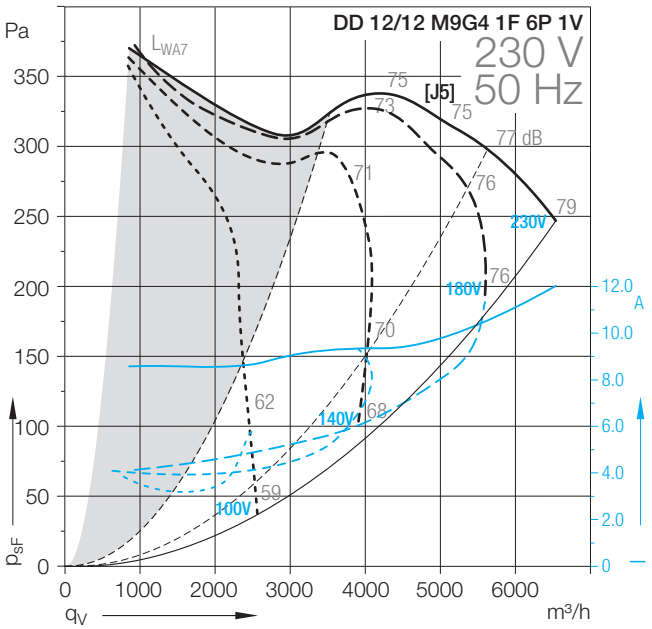

Оформить Заказ
Ventilatorry.ru | zakaz@ventilatorry.ru | 8 (495) 133-95-09

DD-12/12

Technical Data

DD 12/12	Speed control	Curves	Nominal motor power W	Poles –	Phases	Connection	Mains frequency Hz	Max. power consumption W	Max. current consumption A	Speed 1/min
M955 3F 4P 2V +SCT	(1)	[J1]	1500	4	3~		50	3863	5.4	1300
M939 3F 6P 1V +SCT	*	[J3]	1300	6	3~	Δ/Y	50	1534	3.2	900
M9G4 1F 6P 1V	(1)	[J5]	1100	6	1~		50	2132	10	940

Technical Data

DD 12/12	Operating Capacitor µF	Nominal capacitor voltage V	Motor protection class	Motor thermal class	Thermal protection	Media Temperature max. °C	Fan weight kg	Density of media kg/m³	Installation type (ISO 5801)	Article number
M955 3F 4P 2V +SCT			IP20	F	EXT	40	29	1.2	B	61090P
M939 3F 6P 1V +SCT			IP44	B	EXT	40	26	1.2	B	6M0677
M9G4 1F 6P 1V	25	450	IP20	F	EXT	40	28	1.2	B	61091A

(1) = Speed controllable via Transformer
(2) = Speed controllable via TRIAC or Transformer
(3) = Speed controllable via Inverter
* = No speed control available

[HI] High speed, [ME] Medium speed, [LO] Low speed

Attention! We suggest to do not use the fan in the grey marked area! The noise ratings given in the performance curves are sound power level L_{WA7}, see „Technical Description“.

Dimensions in mm, subject to change.

DD 12/12 M955 3F 4P 2V +SCT

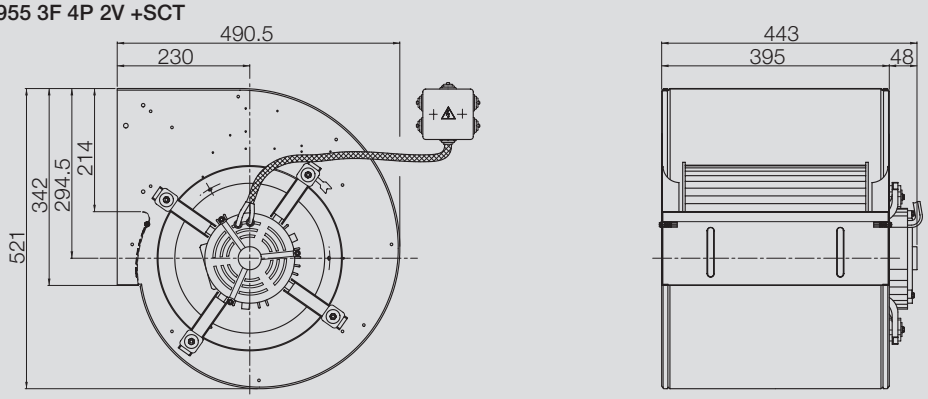

DD 12/12 M939 3F 6P 1V +SCT

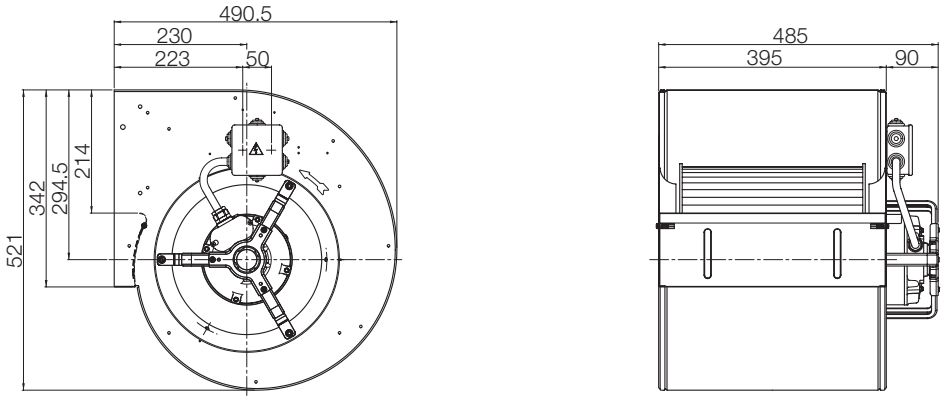

DD 12/12 M9G4 1F 6P 1V

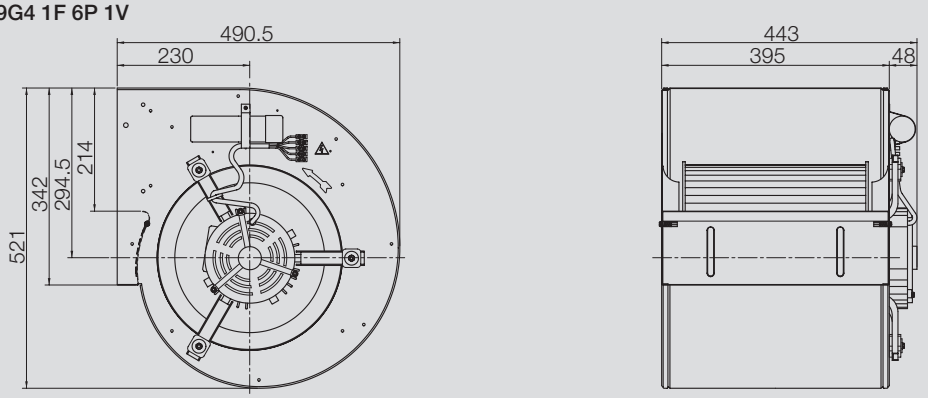

Оформить Заказ
Ventilatorry.ru | zakaz@ventilatorry.ru | 8 (495) 133-95-09

DD-12/12

Technical Data

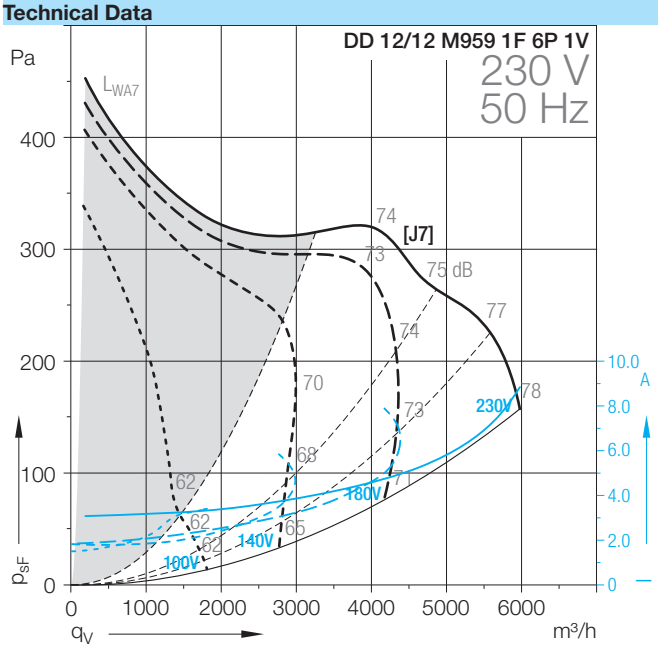

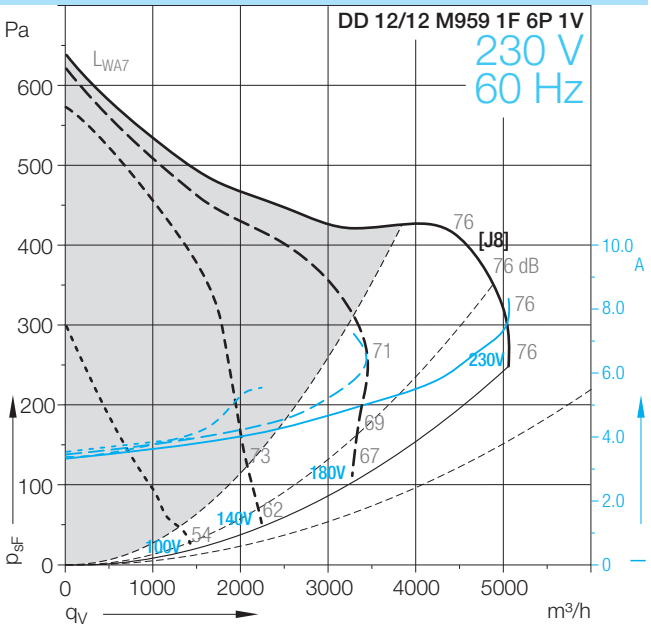

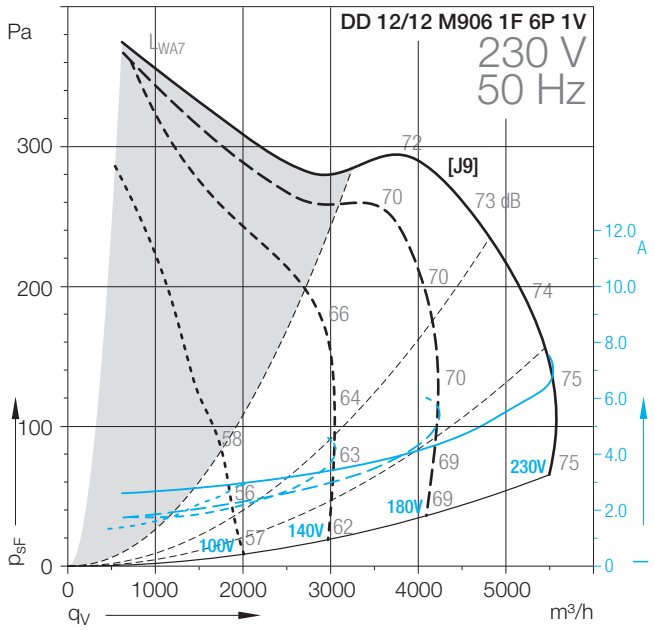

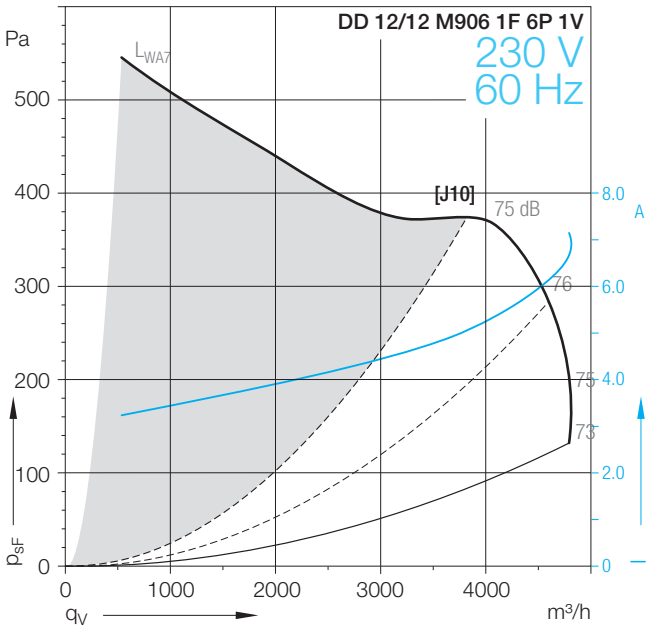

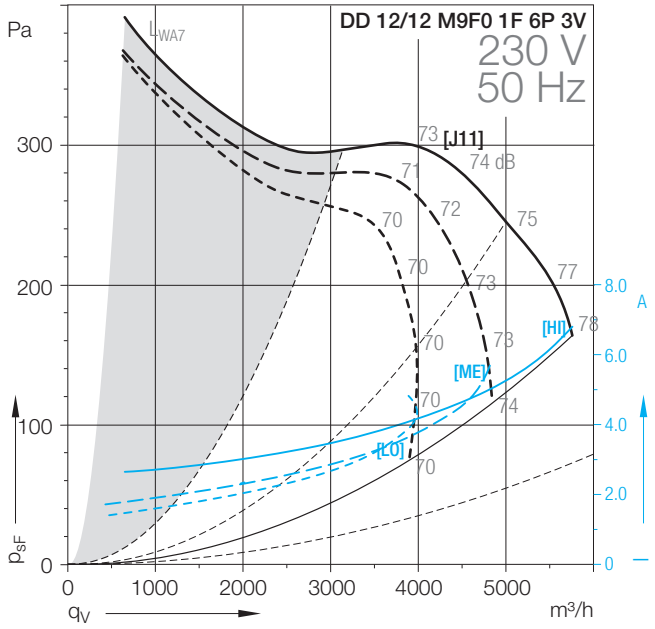

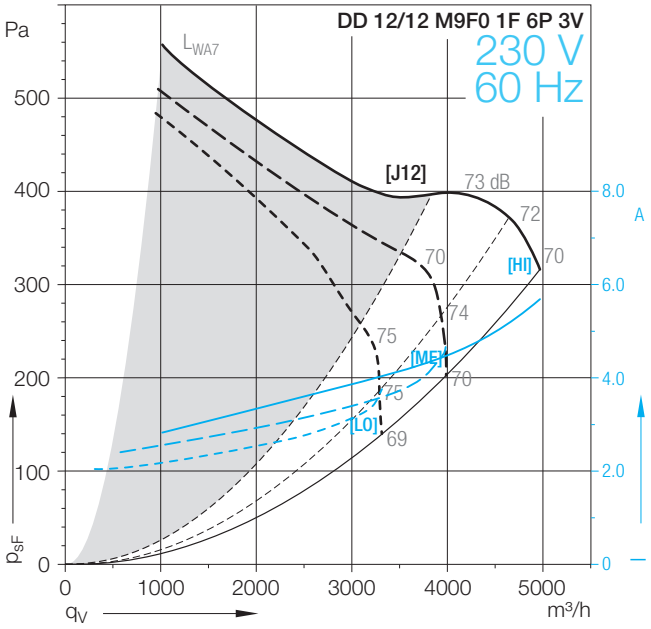

Оформить Заказ
Ventilatorry.ru | zakaz@ventilatorry.ru | 8 (495) 133-95-09

DD-12/12

Technical Data

DD 12/12	Speed control	Curves	Nominal motor power W	Poles –	Phases	Connection	Mains frequency Hz	Max. power consumption W	Max. current consumption A	Speed 1/min
M959 1F 6P 1V	(2)	[J7/J8]	736	6	1~		50/60	1878	7.6	925
M906 1F 6P 1V	(2)	[J9/J10]	590	6	1~		50/60	1600	6.9	910
M9F0 1F 6P 3V	*	[J11/J12]	736	6	1~		50/60	1500	6.4	930

Technical Data

DD 12/12	Operating Capacitor µF	Nominal capacitor voltage V	Motor protection class	Motor thermal class	Thermal protection	Media Temperature max. °C	Fan weight kg	Density of media kg/m³	Installation type (ISO 5801)	Article number
M959 1F 6P 1V	20	450	IP20	B	INT	40	26	1.2	B	6M0961
M906 1F 6P 1V	16	450	IP20	B	INT	40	26	1.2	B	6M06L2
M9F0 1F 6P 3V	20	500	IP20	F	EXT	40	27	1.2	B	6M06N8

(1) = Speed controllable via Transformer
(2) = Speed controllable via TRIAC or Transformer
(3) = Speed controllable via Inverter
* = No speed control available

[HI] High speed, [ME] Medium speed, [LO] Low speed

Attention! We suggest to do not use the fan in the grey marked area! The noise ratings given in the performance curves are sound power level L_{WA7}, see „Technical Description“.

Dimensions in mm, subject to change.

DD 12/12 M959 1F 6P 1V

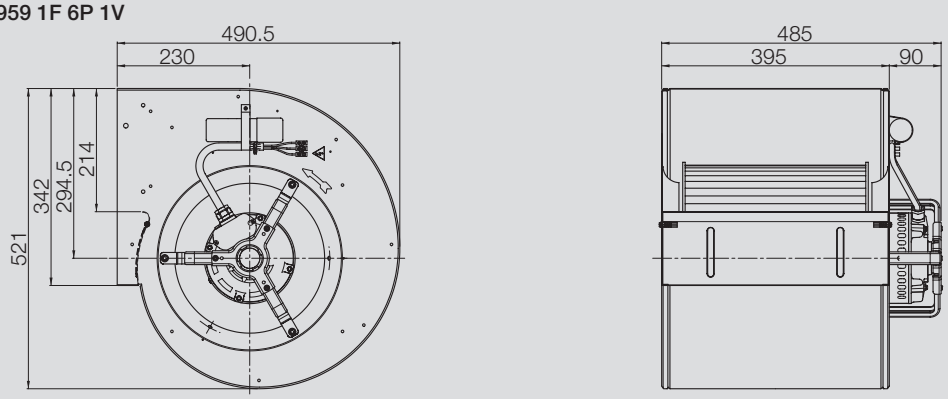

DD 12/12 M906 1F 6P 1V

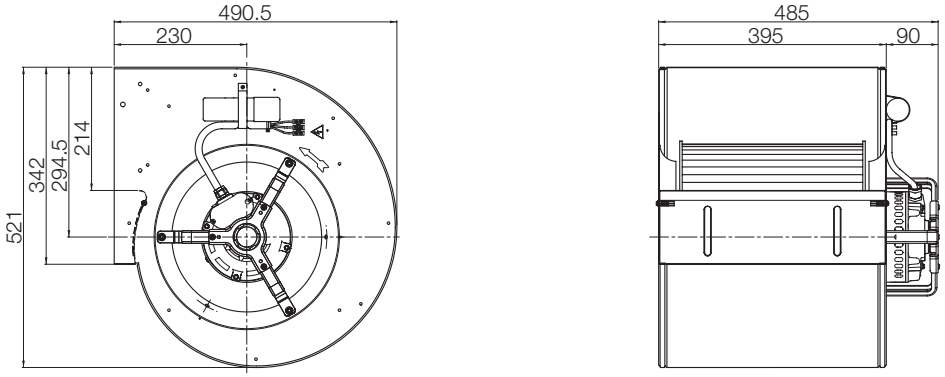

DD 12/12 M9F0 1F 6P 3V

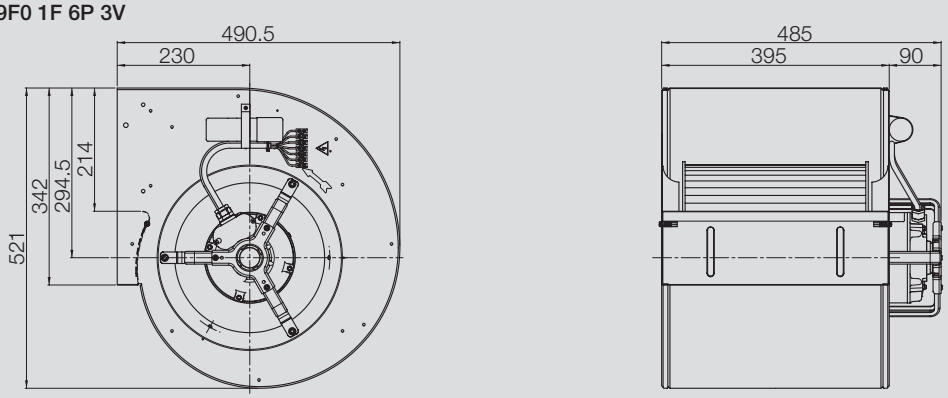

Оформить Заказ
Ventilatorry.ru | zakaz@ventilatorry.ru | 8 (495) 133-95-09

DD-12/12

Technical Data

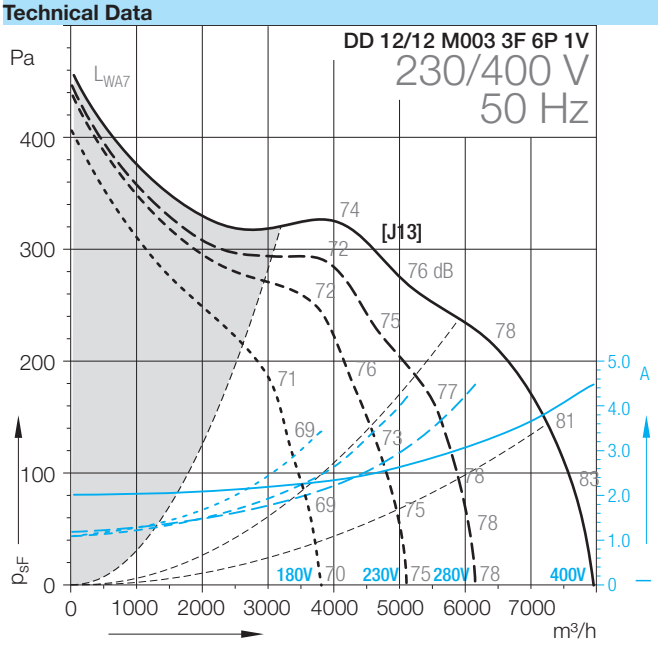

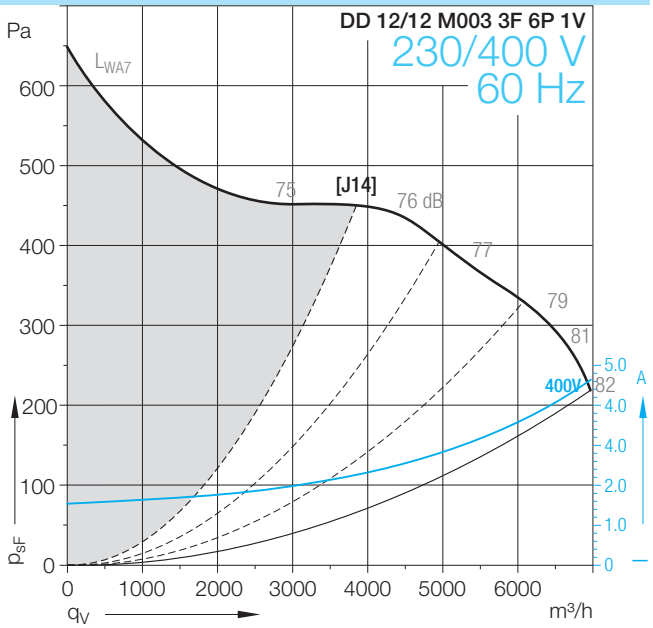

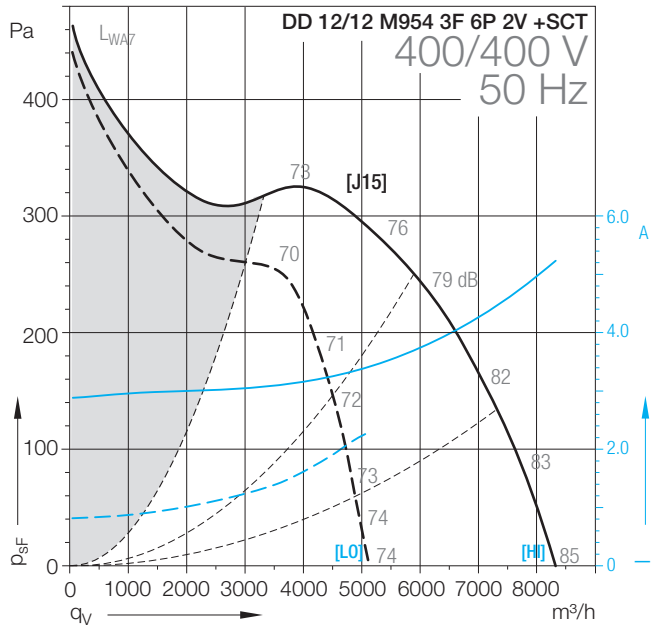

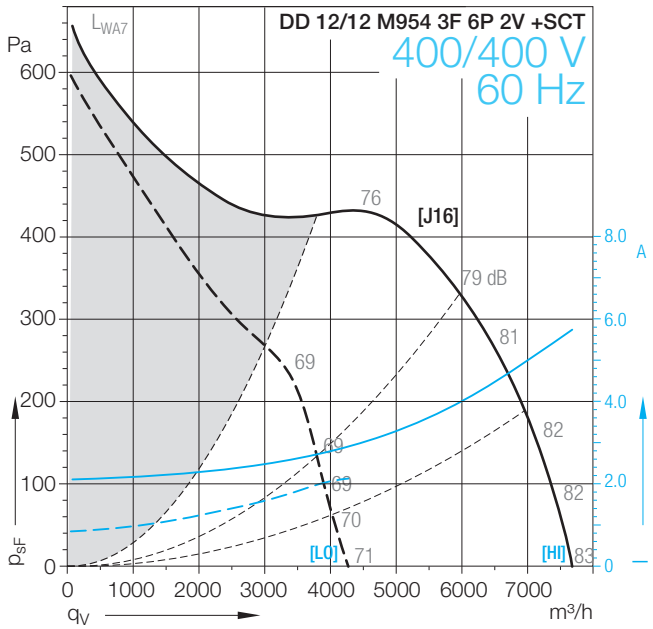

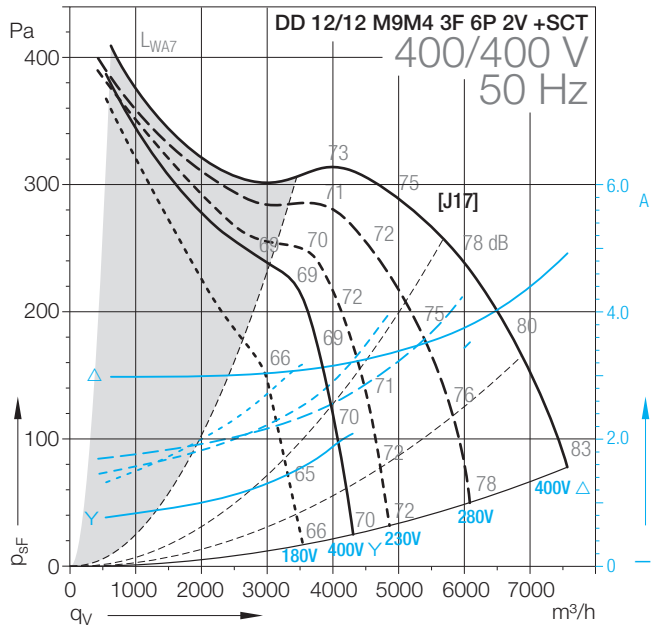

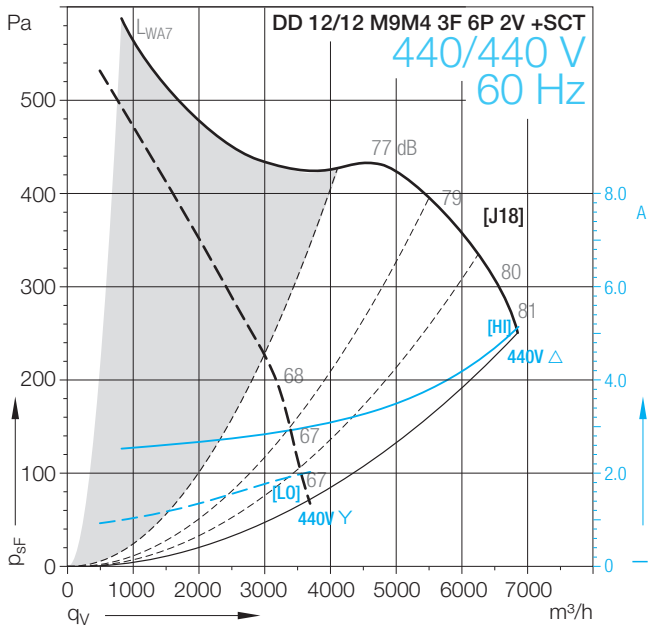

Оформить Заказ
Ventilatorry.ru | zakaz@ventilatorry.ru | 8 (495) 133-95-09

DD-12/12

Technical Data

DD 12/12	Speed control	Curves	Nominal motor power W	Poles –	Phases	Connection	Mains frequency Hz	Max. power consumption W	Max. current consumption A	Speed 1/min
M003 3F 6P 1V	(1)	[J13/J14]	1100	6	3~	Δ/Y	50/60	2455	4.3	900
M954 3F 6P 2V +SCT	(2)/(3)	[J15/J16]	1100	6	3~	Δ/Y	50/60	2513	4.9	920
M9M4 3F 6P 2V +SCT	(2)/(3)	[J17/J18]	1100	6	3~	Δ/Y	50/60	2300	4.6	920

Technical Data

DD 12/12	Operating Capacitor	Nominal capacitor voltage	Motor protection class	Motor thermal class	Thermal protection	Media Temperature max. °C	Fan weight kg	Density of media kg/m³	Installation type (ISO 5801)	Article number
M003 3F 6P 1V			IP20	B	NO	40	26	1.2	B	6M0320
M954 3F 6P 2V +SCT			IP20	F	EXT	40	28	1.2	B	61099Z
M9M4 3F 6P 2V +SCT			IP55	F	EXT	40	27	1.2	B	6109GK

(1) = Speed controllable via Transformer
(2) = Speed controllable via TRIAC or Transformer
(3) = Speed controllable via Inverter
* = No speed control available

[HI] High speed, [ME] Medium speed, [LO] Low speed

Attention! We suggest to do not use the fan in the grey marked area! The noise ratings given in the performance curves are sound power level L_{WA7}, see „Technical Description“.

Dimensions in mm, subject to change.

DD 12/12 M003 3F 6P 1V

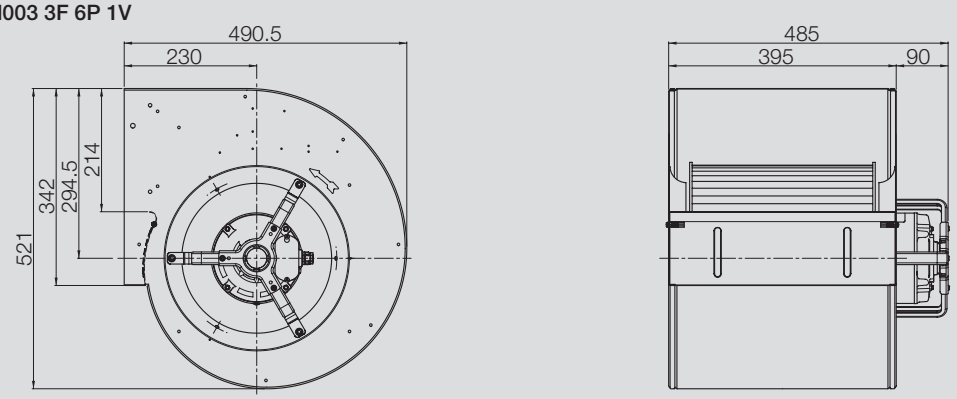

DD 12/12 M954 3F 6P 2V

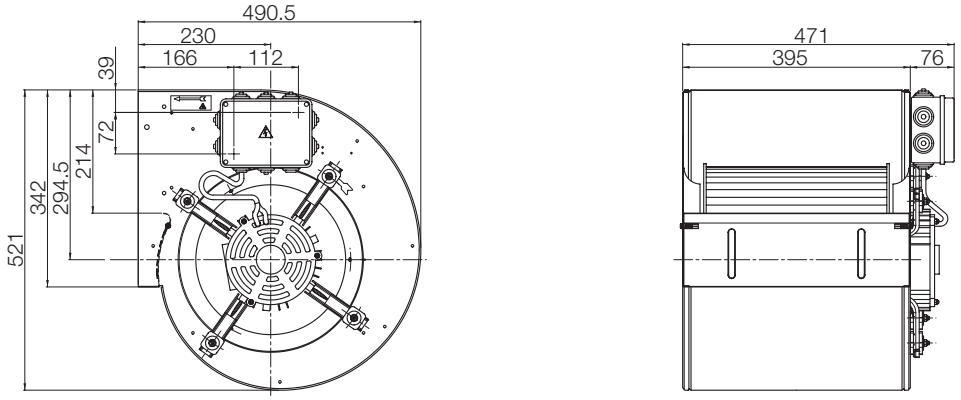

DD 12/12 M9M4 3F 6P 2V

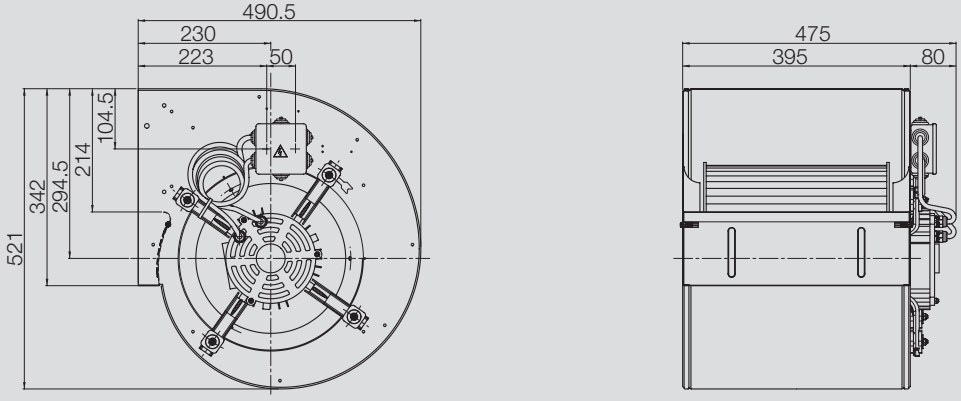

Оформить Заказ
Ventilatorry.ru | zakaz@ventilatorry.ru | 8 (495) 133-95-09