Data Sheet

Itemnumber....: 5541320209

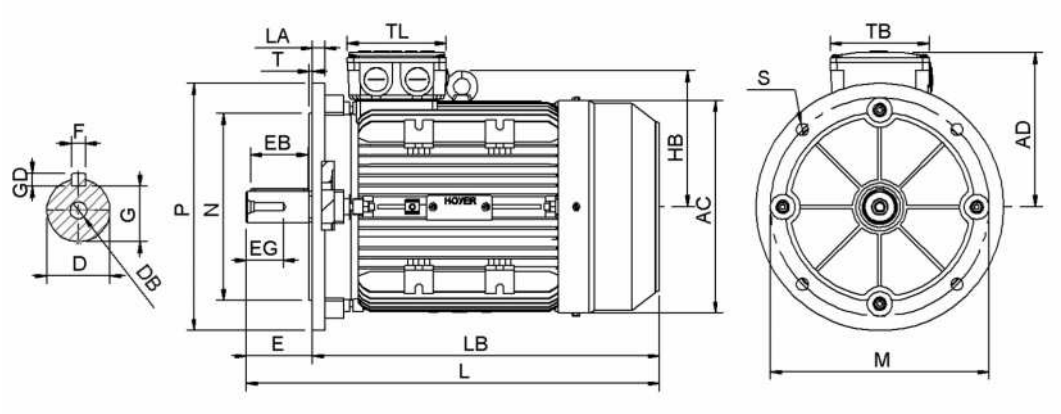

AC = 258	**DB = M12**	**EG = 30**	**GD = 8**	**LA = 15**	**M = 265**	**S = 4-Ø14.5 TL = 120**
AD = 187	**E = 80**	**F = 10**	**H = 132**	**LB = 383**	**N = 230**	**T = 4**
D = 38	**EB = 70**	**G = 33**	**L = 463**	**LE = 453**	**P = 300**	**TB = 120**

Version
Type.....: HMA3 132S-4
Design.....: Induction motor
Standard series.....: IEC 60034
Phase / Voltage range.....: 3~ / Low

Electrical design
Efficiency.....: IE3
Pole.....: 4
Power at 50 Hz (kW).....: 5,50
Hz.....: 50
Voltage.....: 400VD/690VY
Winding voltage.....: 400VD/690VY 50 Hz
Power output (kW).....: 5,50
Duty.....: S1
Insulation class.....: F
Temperature rise.....: B

Motor protection
Thermal protection main....: PTC 3x 155 dgr
Thermal protection second..: None
Space heater.....: None
Temperature detector.....: No
SPM.....: No
IR wire.....: No
Tropical insulation.....: No

Explosion protection
According to.....: None
Type of protection.....: None

General
Direction of rotation.....: CW
Painting.....: RAL 9005 Gloss 10
Nameplate.....: Multivoltage
Special packing.....: No
Special requirements.....: No

Mechanical design
Frame size.....: 132
Mounting.....: B5
Rain cap.....: No
Protection class.....: IP55
Cooling method.....: IC411/TEFC
External grounding.....: Yes
Drain hole.....: Yes
Frame material.....: Aluminium
Material approval.....: None
Shaft.....: IEC standard
Key.....: Closed key
Balancing.....: Half key balancing
Vibration class.....: Grade-A
Weight (kg).....: 50,0

Environment condition
Ambient temp. min. (°C)..: -20
Ambient temp. max. (°C)..: 40
Altitude (mtr up to).....: 1000

Bearing
DE Bearing.....: 6308-ZZ/C3
NDE Bearing.....: 6308-ZZ/C3
Fixed bearing.....: DE

Terminal box
Tbox position.....: Top
Cable entry direction.....: Right (from DE)
Cable entry
Main.....: 2 x M25x1,5
Plastic blindcaps
Accessory.....: 1 x M20x1,5
Plastic blindcap
Connection type.....: Delta (D)
Terminal board thread.....: 6-M5

Test values
Rotor inertia (kgm²).....: 0,034
Noise level (dB(A)).....: 61
No load current (A).....: 5,10
Winding resist. (ohm).....: 1,96
Starting time (sec.).....: 0,06
Temp. rise winding (K).....: 49
Temp. rise surface (K).....: 42

Rated power (kW)	5,50	5,35	6,60	6,40
Frequency (Hz)	50	50	60	60
Voltage (V)	400 690	380 660	480 830	440
Connection	D Y	D Y	D Y	D
Full load current (A)	10,8 6,25	11,2 6,45	10,8 6,25	11,2
Speed (rpm)	1460	1460	1750	1750
Power factor cos(phi)	0,82	0,83	0,82	0,84
Efficiency, 100/75/50 (%)	89,7/90,0/89,0	89,7/90,0/89,0	89,7/90,0/89,0	89,0/89,3/88,2
Ist/In	8,8	7,7	8,8	8,1
Full load torque (Nm)	36,0	35,0	36,0	35,0
Tst/Tn	2,8	2,6	2,8	2,4
Tmax /Tn	3	2,8	3	2,6
Duty	S1	S1	S1	S1
Ambient temp. (°C)	40	45	40	45

Data are not binding. Hoyer reserves the right to implement changes without notice. The extent of data are not equivalent to nameplate on the motors.