MD 1C VARIO

Part Number: 20696660

Performance features

- outstanding chemical resistance and superior vapor tolerance
- exceptionally high performance even at low vacuum
- excellent ultimate vacuum even with gas ballast
- whisper quiet and ultra low vibration



Technical data

Vacuum controller		CVC 3000
Number of heads / stages		4 / 3
Max. pumping speed	m^3/h	1.7
Max. pumping speed	cfm	1.0
Ultimate vacuum (abs.)	mbar/torr	5 / 3.75
Ultim. vac. (abs.) with gas ballast	mbar/torr	7 / 5.25
Ambient temperature range (operation)	°C	10 - 40
Ambient temperature range (storage)	°C	-10 - 60
Max. back pressure (abs.)	bar	1.1
Inlet connection		Hose nozzle DN 8-10 mm
Outlet connection		Hose nozzle DN 8-10 mm
Rated motor power	kW	0.16
Max. operating current	A	0.7
Motor speed range	min^{-1}	200 - 2400
Degree of protection		IP 20
Dimensions (L x W x H), approx.	mm	294 x 193 x 299
Weight, approx.	kg	6.0
Noise level at 50 Hz, typ.	dBA	42
CE mark		Yes
ATEX conformity		II 3G IIC T3 X Internal Atm. only

Items supplied	Pump completely mounted, ready for use, with manual
Accessories	Rubber vacuum tubing DN 8 mm (686001)

Pumping speed graph

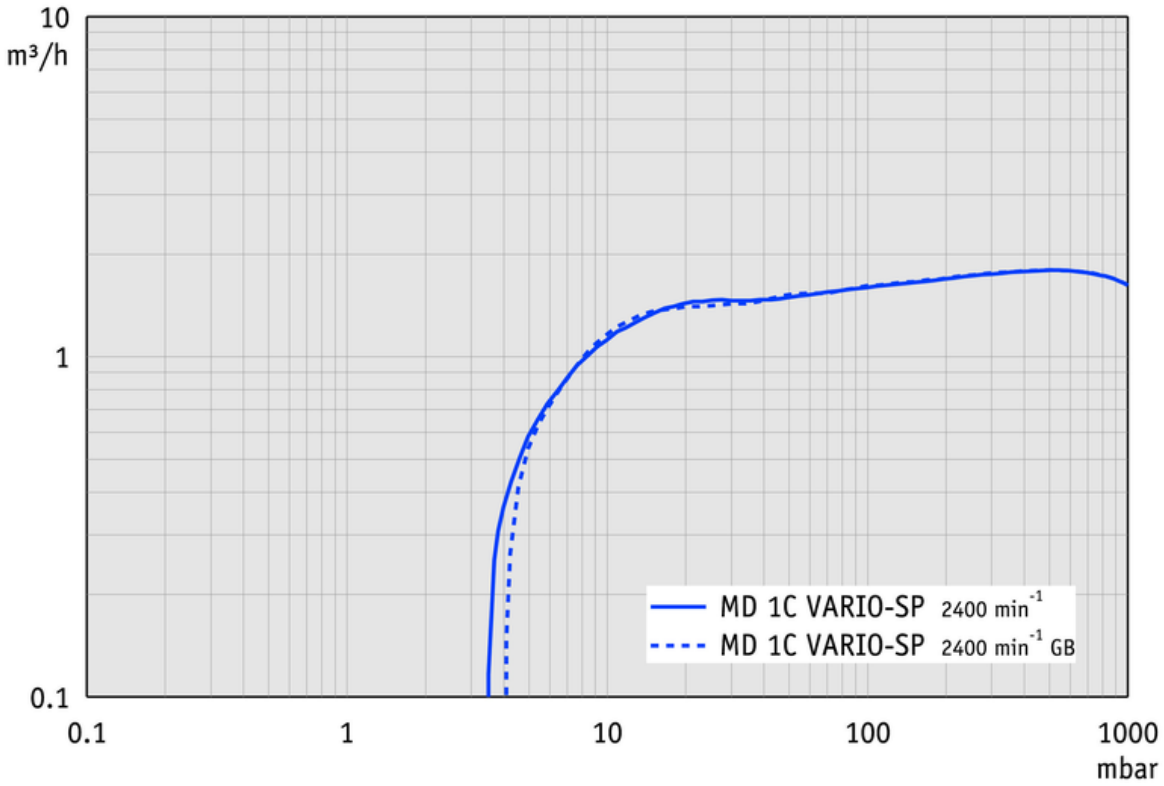

Pump down graph
(10 l volume)

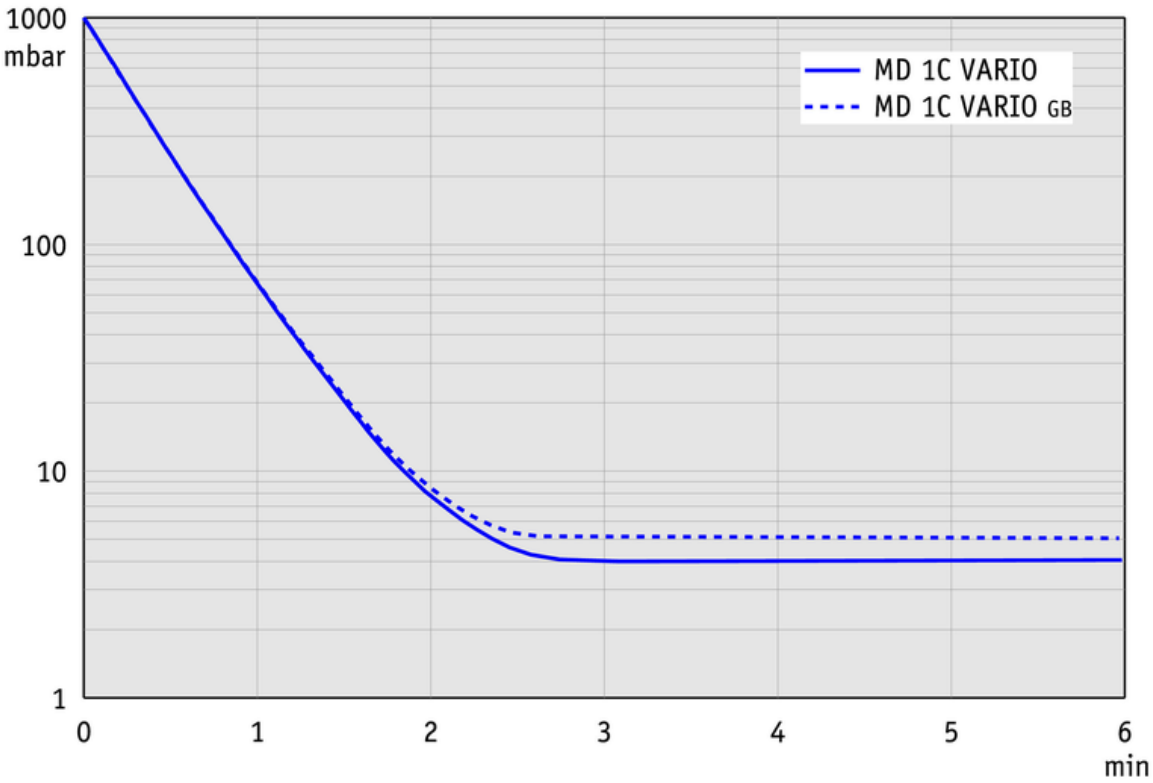

Dimension sheet

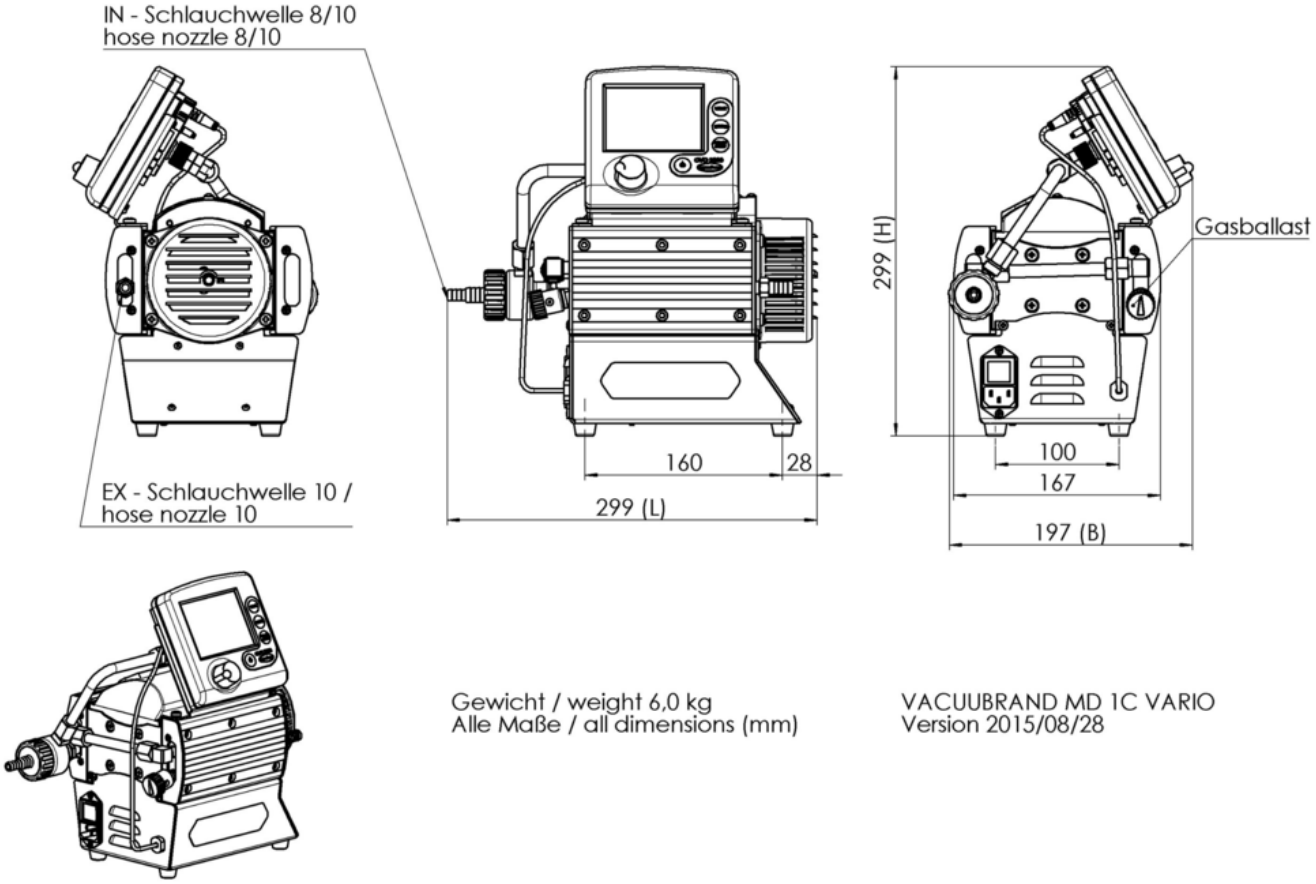

Ordering data

Product name	Mains voltage and frequency	Plug	Part no.
MD 1C VARIO	200-230 V~ 50-60 Hz 100-120 V~ 50-60 Hz	CEE mains cable	20696660