Dimensions in mm

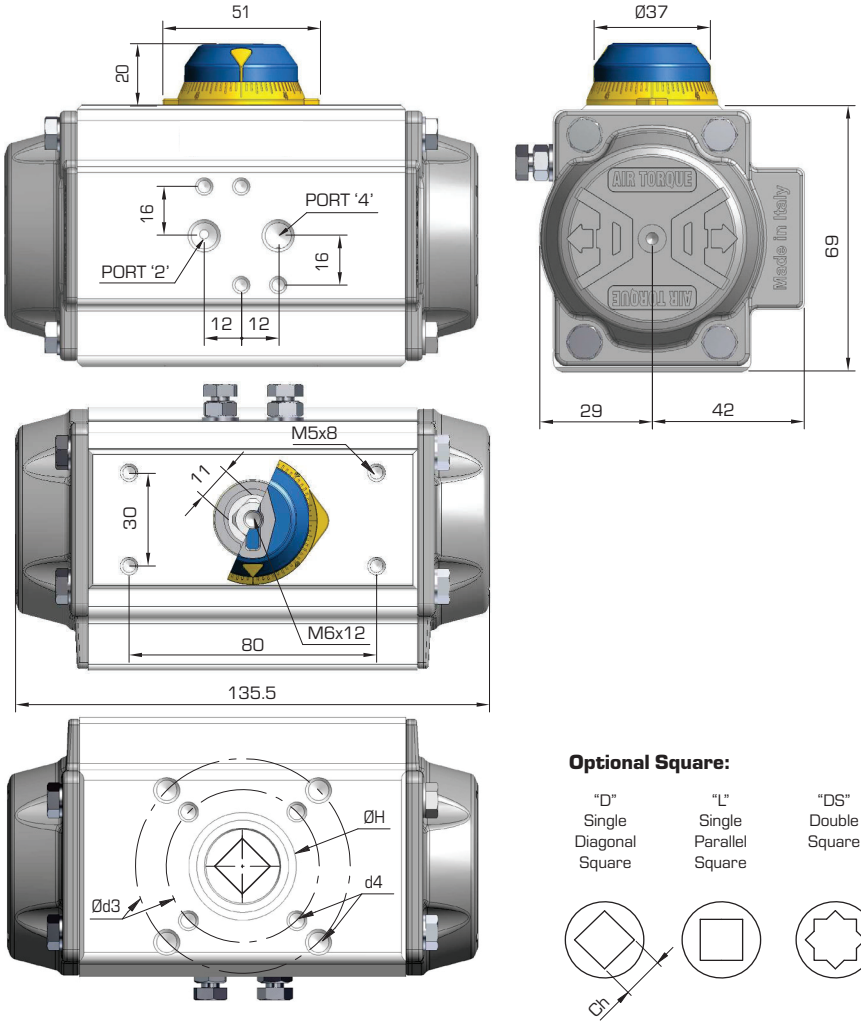

Optional Square:

"D" Single Diagonal Square	"L" Single Parallel Square	"DS" Double Square

ISO 5211 Interface:

		STD	OPTIONAL	
ISO 5211		F04	F03 + F05	
Ø d2		30	25	NA
Ø d3		42	36	50
d4		M5x8	M5x8	M6x9
Ø H		30	25	
Ch x l min. (*)	D	9x11 - 11x12		
	DS	11x12		
h min.		0,5	0,5	0,5
h1		1,5	1,5	NA

(*) Other type and sizes of shaft connection available upon request.

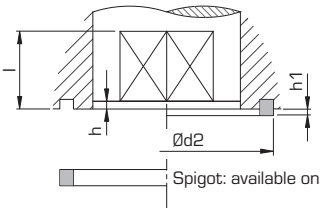

Connection / Attachment:

Pressure connection Port 2 and 4	G1/8"
Ancillary Attachment	AA1

Rotation and stroke adjustment:

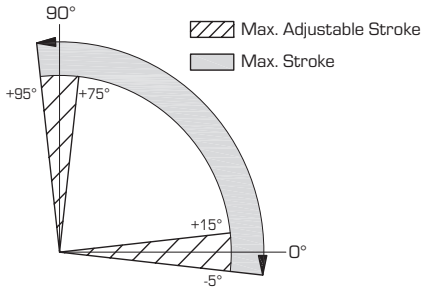

OUTPUT TORQUE FOR DOUBLE ACTING IN Nm (**)

Pressure	2,5 bar		3 bar		3,5 bar		4 bar		4,2 bar		4,5 bar		5 bar		5,5 bar		6 bar		7 bar		8 bar		APPROX. WEIGHT (Kg)
	0°	90°	0°	90°	0°	90°	0°	90°	0°	90°	0°	90°	0°	90°	0°	90°	0°	90°	0°	90°	0°	90°	
D	8,3		10		11,6		13,3		14		15		16,6		18,3		19,9		23,3		26,6		1,1

OUTPUT TORQUE FOR SPRING RETURN IN Nm (**)

Pressure	2,5 bar		3 bar		3,5 bar		4 bar		4,2 bar		4,5 bar		5 bar		5,5 bar		6 bar		7 bar		8 bar		Spring Stroke		APPROX. WEIGHT (Kg)
Spring Set	0°	90°	0°	90°	0°	90°	0°	90°	0°	90°	0°	90°	0°	90°	0°	90°	0°	90°	0°	90°	0°	90°	90°	0°	
	Start	End	Start	End	Start	End	Start	End	Start	End	Start	End	Start	End	Start	End	Start	End	Start	End	Start	End	Start	End	
S 1	**5,0**	**3,0**	7	4,7	8	6,3	10,0	8	10,7	8,7	11,7	9,6	13,3	11,3									**5,3**	**3,3**	1,13
S 2	4	1,9	**6,0**	**3,6**	7,7	5,3	9,3	6,9	10,0	7,6	11,0	8,6	12,7	10,2	14,3	11,9							**6,4**	**4,0**	
S 3			5,3	2,5	**7,0**	**4,2**	8,7	5,8	9,4	6,6	10,3	7,5	12,0	9,2	13,7	10,8	15,3	12,5					**7,4**	**4,6**	1,17
S 4					6,3	3	**8,0**	**5**	**8,7**	**5,5**	9,7	6,4	11,3	8,1	13,0	9,8	14,7	11,4	18,0	14,7			**8,5**	**5,3**	
S 5							7,3	3,7	8,1	4,4	**9,0**	**5,4**	10,7	7,0	12,3	8,7	14,0	10	17,3	13,7	20,6	17,0	**9,6**	**5,9**	1,21
S 6											8,4	4,3	**10,0**	**6,0**	11,7	7,6	13,3	9,3	16,7	12,6	20,0	16	**10,6**	**6,6**	
S 7													9,4	4,9	**11**	**6,6**	13	8,2	16,0	11,6	19,3	14,9	**11,7**	**7,3**	1,25
S 8															10,4	6	**12,0**	**7,2**	15,3	10,5	18,7	13,8	**12,8**	**7,9**	

(**) Nominal Output Torque

Technical data

Max. Pressure	Rotation (for STD)	Screw Stroke Adjustment	Ø Chamber (mm)	Air volume (L)		Approx. Stroking time (sec.) (A)				Operating temperature range (°C) (B)		
						D		S				
8 bar	0° - 90°	For 1° adj. need 1/6 Turn	50	opening	closing	opening	closing	opening	closing	ST	HT	LLT2
				0,09	0,15	0,20	0,25	0,25	0,30	-40 to +80	-15 to +150	-60 to +80

(A) The values refer to specific test conditions; please contact AIR TORQUE for detailed information.
(B) Every temperature range option requires proper components and lubricant. please contact AIR TORQUE for detailed information.

Operating Medium:
The operating medium must be free of dust and oil. The maximum particle size must not exceed 30µ (ISO 8573 Part1, Class5). In order to prevent water condensation and/or solidification (ice when actuator works below 0°C), the operating medium must have a dew point equal to -20°C or at least 10°C below the ambient temperature (ISO 8573 Part1, Class3).

AIR TORQUE S.p.A.
via Dei Livelli di Sopra, N°8/11
24060 Costa di Mezzate (Bg) Italy
Tel.: +39 035 682299 - Fax: +39 035 687791
info@airtorque.it - www.airtorque.it

THIS DATA SHEET IS PROPERTY OF AIR TORQUE S.P.A. COSTA DI MEZZATE ITALY AND ALL RIGHTS OF USE AND REPRODUCTION ARE RESERVED.
DUE TO CONTINUOUS PRODUCT DEVELOPMENT THIS DATA SHEET MAY BE SUBJECT TO CHANGE WITHOUT PRIOR NOTICE DURING THE TIME. CONTACT AIR TORQUE FOR THE AVAILABILITY OF THE UPDATED SHEET.