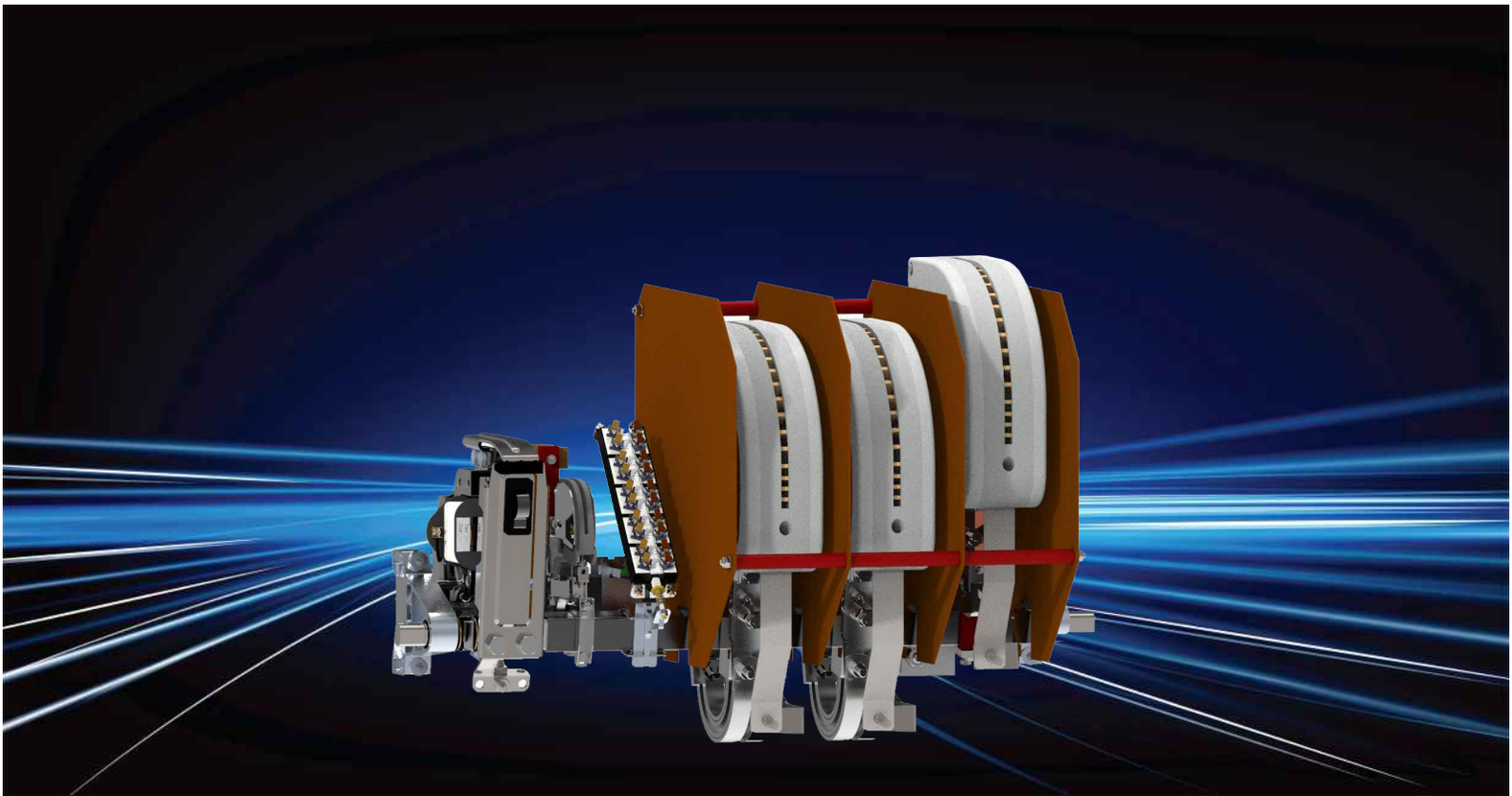

N and TADN

bar contactors for Industry applications

Wide range of Currents

Availability of different thermal current size main poles from 85A up to 3000A.

AC/DC Applications

Several configurations of main poles available: 1NO, 2NO, 2NO+1NC for 600/1000 Vdc and 3NO for 690 Vac.

Standards

N Line is compliant with IEC 60947-4-1 standard, categories AC3 and DC3. TADN Line is compliant with ANSI-IEEE CE 37.18-1979 and C37.16-1988.

Low Maintenance

High reliability ensures contactors are provided with low and easy maintenance.

MICROELETTRICA

System Characteristics

Bar Contactors provide excellent operational performances, making them the best choice for high power load connection, often covering the function of a fault clearing protection device.
Their modular design allows tailored configurations for the specific requirements of each application. The main pole ratings cover currents from 85A up to 3000A, and several poles can be mounted side by side with custom length shaft sets, to provide customizable solutions for a wide range of technical needs.
Our products are designed for easy maintainability, allowing very easy inspection and servicing, for immediate access to all component parts. Maintenance activities can be performed without removing the contactor from the electrical circuit considering the due safety procedure.
Closing and opening operation are guaranteed by the movement of a moving contact towards a fixed contact. The breaking operation takes place in air, and it is aided by a magnetic blow-out system. The electric arc is fully contained inside the ceramic arc-chute (plastic for ratings up to 190A).
The silver alloy contacts solution allows a longer electrical durability, always guaranteeing the best conductivity on the main contacts. As a result, the working temperature of the components remains stable during its entire lifetime, preserving all insulation components of the circuit from accelerating ageing.

N Line Contactors are equipped with an electromagnetic holding system and a single state function used for low voltage industrial application up to 1kV. They are modular contactors with different standard configurations according with the main poles number and type (normally open or normally closed).
A typical application for N Line contactors is the control of AC and DC motors.

TADN Line Contactors are specifically designed to control the generator excitation circuit and are typically composed by three poles: 2 normally open poles (NO) for field supply and 1 normally closed pole (NC) for field discharge.
In order to minimize power consumption, the contactors are always equipped with a mechanical latch and shunt trip relay for double state function.

Auxiliary contacts (AUX) are included in an auxiliary circuit and are mechanically operated by the contactor. Every contactor is equipped by 10 contacts, 5 NO and 5 NC.

Control Circuit
It is intended to carry the power and/or the control signal to the actuating system that mechanically closes or opens the contacts (LV circuit).
Monostable control circuit is the standard for N Line Contactors, Bistable control circuit (TAN) is the standard for TADN Line Contactors and is available for N Line contactors.

N - Line

The N Line must be considered every time a high thermal current and high breaking current systems up to 1 kV are required.

The N contactors are suitable for various applications, from motor control to lifting magnets, and can be manufactured in single or multipolar form, with normally open (NO) or normally closed (NC) main poles.

The standard configurations are 1NO, 1NC or 2NO for DC applications, and 3NO for AC applications. They are operated and hold closed by a single coil. The DC control coil operates with a power saving system to reduce power consumption within a wide working range.

TADN - Line

TADN Line must be considered every time a high thermal current and high breaking current for **field control in the power plant generating systems** up to 1 kV are required.

TADN contactors are manufactured with 2 normally open (NO) poles (for field supply) and a single normally closed (NC) pole. They have double state function (open and closed) thanks to a mechanical latching device that also avoids power consumption during hold condition.

TADN contactors are operated by a single coil for closing operation and a shunt trip relay for opening operation.

For safety reasons an overvoltage relay can be also provided as an option.

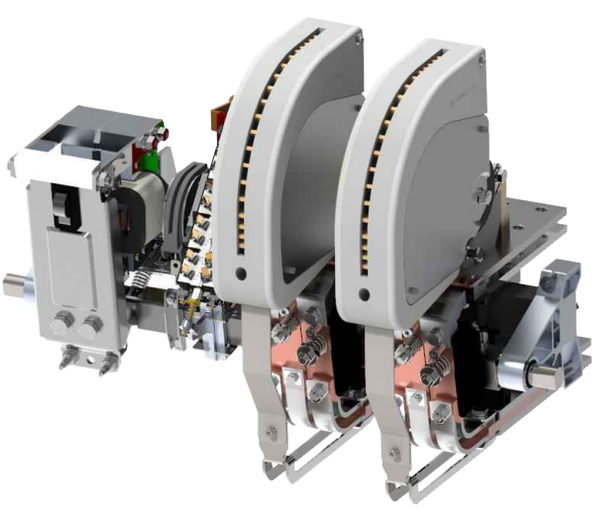

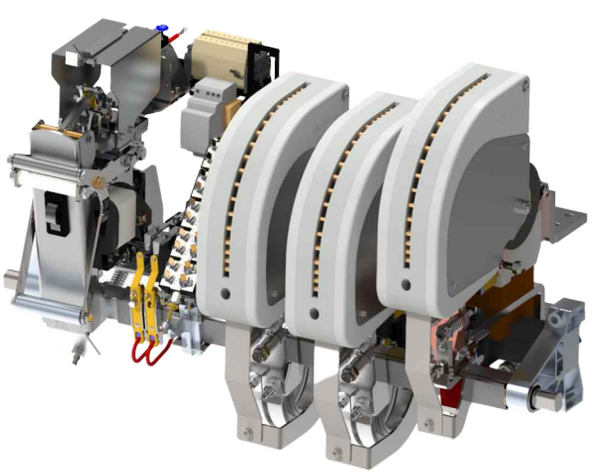

MICROELETTRICA

N - Contactors rating

Protection and Control functions description

DC applications		
Rated Operational Voltage (Ue)	[V]	600 (1NO/1NC) 1000 (2NO Series*)
Rated Insulation Voltage (Ui)	[V]	1000
Rated Insulation Voltage Impulse withstand (Ui)	[kV]	8
Product Standard		IEC 60947-4-1
Auxiliary Contact Blocks		5NO + 5NC
Utilization Category		DC3

N - Line			**N125**			**N190**			**N350**			**N650**		
			1NO	1NC	2NO	1NO	1NC	2NO	1NO	1NC	2NO	1NO	1NC	2NO
Conventional Free air thermal current Ith [at 40°C]**	Ith [A]		125	125	125	190	190	190	350	350	350	650	650	650
Rated Operational Making Current (max)	Ie [A]	220 Vdc	220	220	220	360	360	360	640	640	640	1200	1200	1200
		600 Vdc	81	80	125	135	130	190	235	235	350	440	440	650
Rated Operational Breaking Current (max)	Ie [A]	220 Vdc	125	110	125	190	230	190	350	450	350	650	670	650
		600 Vdc	81	40	125	135	65	190	235	95	350	440	180	650
		1000 Vdc	-	-	110	-	-	180	-	-	320	-	-	600
Maximum Making capacity for 100 ms	Ich [kA]		2.5	1.8	2.5	3	2	3	6	4.5	6	10	7	10
Short Circuit withstand current for 100 ms	Icw [kA]		3	2.5	3	4	3	4	8	6	8	12	9	12
Maximum Breaking capacity tau=15 ms	Idcmax [kA]	220 Vdc	1.2	0.6	2.5	1.5	0.9	3	2.5	1.7	5	4.5	4	9
		600 Vdc	0.5	0.25	1	0.7	0.3	1.4	1.2	0.6	3	2.2	1.4	5
		1000 Vdc	-	-	0.6	-	-	0.9	-	-	1.9	-	-	3.3
Power consumption at closing	[W]		130	130	130	130	130	130	180	180	180	300	300	300
Power consumption at holding	[W]		15	15	15	15	15	15	15	15	15	20	20	20

N - Line			**N1000**			**N1250**			**N2000**			**N3000**		
			1NO	1NC	2NO	1NO	1NC	2NO	1NO	1NC	2NO	1NO	1NC	2NO
Conventional Free air thermal current Ith [at 40°C]**	Ith [A]		1000	1000	1000	1250	1250	1250	2000	NA	2000	3000	NA	3000
Rated Operational Making Current (max)	Ie [A]	220 Vdc	1800	1800	1800	2220	2220	2220	-	-	-	-	-	-
		600 Vdc	660	660	1000	810	810	1250	-	-	-	-	-	-
Rated Operational Breaking Current (max)	Ie [A]	220 Vdc	1000	1100	1000	1250	1230	1250	2000	-	2000	3000	-	3000
		600 Vdc	660	310	1000	810	340	1250	1320	-	2000	1850	-	3000
		1000 Vdc	-	-	900	-	-	1100	-	-	1800	-	-	2500
Maximum Making capacity for 100 ms	Ich [kA]		18	18	18	20	18	20	25	-	25	35	-	35
Short Circuit withstand current for 100 ms	Icw [kA]		20	23	20	25	18	25	30	-	30	40	-	40
Maximum Breaking capacity tau=15 ms	Idcmax [kA]	220 Vdc	6.5	4	13	8	4.5	16	15	-	30	17.5	-	35
		600 Vdc	3.3	1.75	7.5	4.4	2.1	10	7.3	-	15	9.2	-	18
		1000 Vdc	-	-	4.9	-	-	6.6	-	-	9.9	-	-	11.8
Power consumption at closing	[W]		650	650	650	1000	1000	1000	1000	-	1000	1500	-	1500
Power consumption at holding	[W]		30	30	30	50	50	50	50	-	50	80	-	20

* Bar contactors with 2NO Poles in series are designed to operate up to 1000 Vdc

** Device cabled according to IEC 60947

NA = Not Available

AC applications		
Rated Operational Voltage (Ue)	[V]	690 (3NO series)
Rated Insulation Voltage (Ui)	[V]	1000
Rated Insulation Voltage Impulse withstand (Ui)	[kV]	8
Product Standard		IEC 60947-4-1
Auxiliary Contact Blocks		5NO + 5NC
Utilization Category		AC3

N - Line			N125	N190	N350	N650	N1000	N1250	N2000	N3000
			3NO	3NO	3NO	3NO	3NO	3NO	3NO	3NO
Conventional Free air thermal current Ith [at 40°C]**	Ith [A]		125	190	350	650	1000	1250	2000	3000
Rated Operational Current (max)	Ie [A]	220 Vdc	110	180	320	600	900	1100	1800	2500
		600 Vdc	110	180	320	600	900	1000	1800	2500
		690 Vdc	89	141	251	482	712	890	1414	1990
Maximum Making capacity for 100 ms	Ich [kA]		2.5	3	6	10	18	20	25	35
Short Circuit withstand current for 100 ms	Icw [kA]		3	4	8	12	20	25	30	40
Maximum Breaking capacity cosΦ=0,5	Iacmax [kA]	220 Vdc	3.6	4.3	8.2	13.8	21.6	25.9	38	51.8
		600 Vdc	1.1	1.8	3.4	6.3	9.2	11.5	17.2	17.2
		1000 Vdc	1	1.6	3	5.5	8	10	15	15
Power consumption at closing	[W]		130	130	180	300	650	1000	1000	1500
Power consumption at holding	[W]		15	15	15	20	30	50	50	80

** Device cabled according to IEC 60947

N - Contactors Typical Applications

DC motor control (1NO, 2NO, 2NO+1NC versions)

DC motors differs, according to the stator type, in permanent magnet and wound stator type. For this last version, three different electrical connections between the stator and the rotor are feasible (series, shunt/parallel and compound) in order to achieve a unique speed/torque.

The contactor for these applications can be used for systems at rated voltage up to 1000Vdc and motors with power up to 2,5 MW.
Permanent magnet DC motor and Wound stator DC Motors (Shunt connected): starting, plugging, inching. Dynamic breaking of DC Motor.

Utilization category according standard CEI EN 60947-4-1: DC3.

Specifically:

a) 1NO pole for DC motors with rated voltage up to 400 Vdc (DC3).
b) 2NO poles (series connected) for DC motors with rated voltage up to 1000 Vdc (DC3) or 750 Vdc (DC5).
c) 2NO poles (series connected) + 1NC pole for DC motors, with rated voltage up to 1000 Vdc (DC3) or 750 Vdc (DC5), with braking resistor used to dissipate the energy produced by the motor during the braking phase.

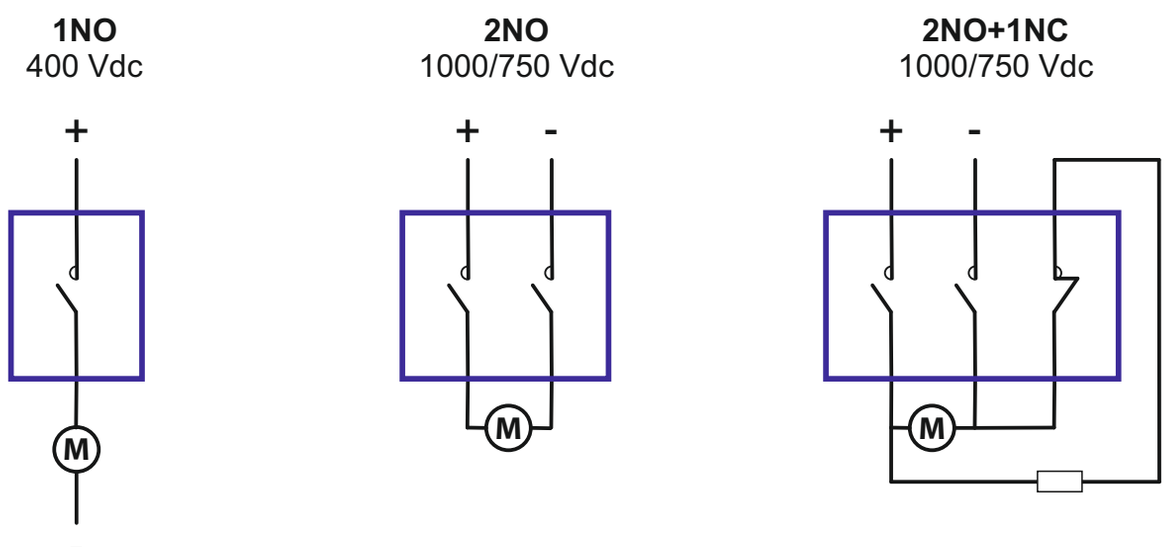

DC lifting magnet (1NO, 2NO, 2NO+1NC versions)

The contactor for this application is composed of 1NO, 2NO or 1NC poles according to the rated voltage or the working principle of the system:

- 1NO pole for rated voltage up to 600 V (DC3)
- 1NC pole for rated voltage up to 600 V (DC3)
- 2NO poles (series connected) for rated voltage up to 1000 Vdc (DC3)

Three phase AC motor control (3NO version))

The contactor for this application is composed of 3 normally open poles (NO) for systems type 3P or 4 normally open poles (NO) for systems type 3P+N.

It can be used for systems at rated voltage up to 690Vac and motors with power up to 2 MW for Squirrel cage motor: starting, breaking, whilst motor running.

Utilization category according standard CEI EN 60947-4-1: AC3.

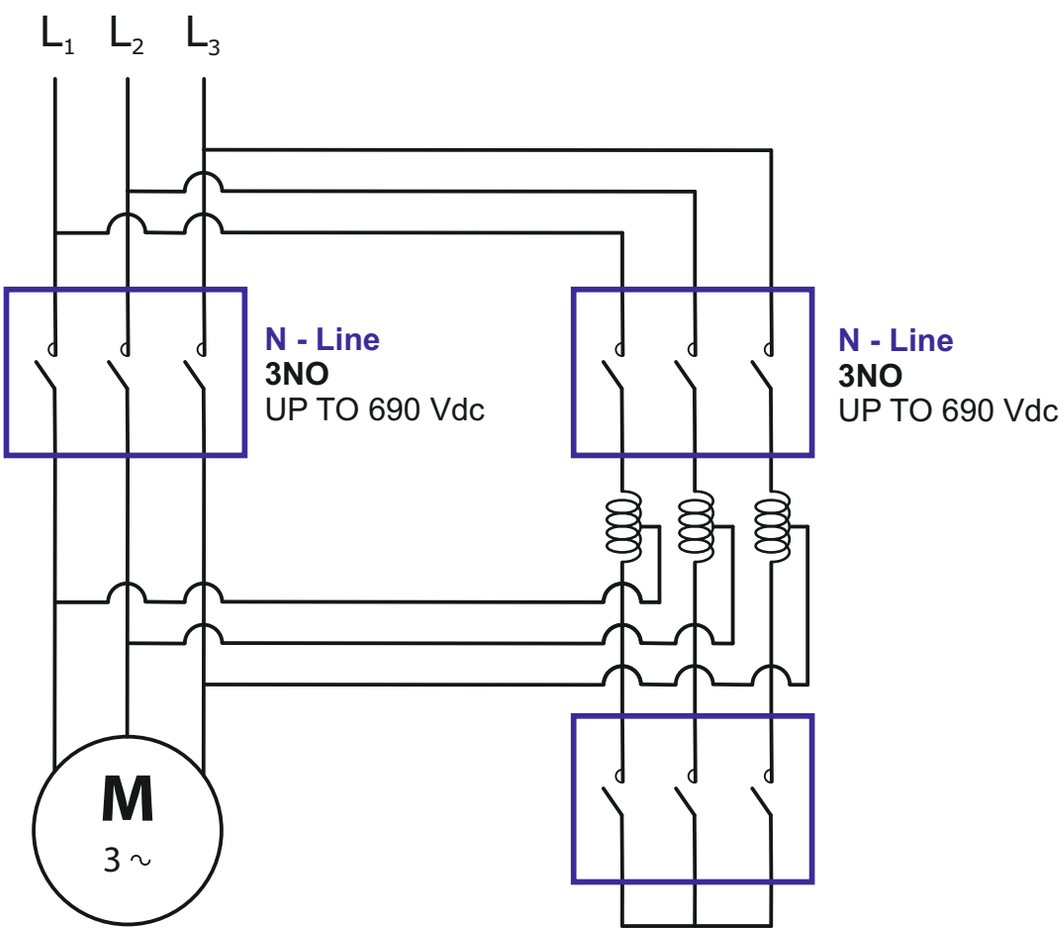

TADN - Contactors rating

Protection and Control functions description

Field Discharge and Exciters applications		
Rated Operational Voltage (Ue)	[V]	690 (2NO series+1NC)
Rated Insulation Voltage (Ui)	[V]	1000
Rated Insulation Voltage Impulse withstand (Ui)	[kV]	8
Rated maximum interrupting voltage of main contacts (Vcc)	[V]	1000
Product Standard		ANSI-IEEE CE 37.18-1979 and C37.16-1988
Main Poles configuration		2NO series + 1NC
Time from NC closing and NO opening	[ms]	2 ÷ 3
Time from NO closing and NC opening	[ms]	3 ÷ 5
Auxiliary Contact Blocks		5NO + 5NC

TADN - Line			**TADN 125**	**TADN 190**	**TADN 350**	**TADN 650**	**TADN 1000**	**TADN 1250**	**TADN 2000**	**TADN 3000**
Conventional Free air thermal current Ith [at 40°C]**		Ith [A]	125	190	350	650	1000	1250	2000	3000
Rated interruption current of main contacts at Vcc (short-circuit in the armature circuit)		Icc@Vcc [kA]	0.6	1.5	2.5	5	8.5	10	15	15
Rated 1/2 second short-time current	(NO pole)	Icc 0.5" [kA]	2	3	6	9	15	20	23	30
Rated 15 seconds short-time current of the discharge contacts	(NC pole)	Id 15" [kA]	0.9	1	2.5	4	5.5	6	6	6
Power consumption at closing		[W]	200	200	200	480	950	950	1350	2400
Power consumption at holding		[W]	0	0	0	0	0	0	0	0
Power consumption at opening		[W]	150	150	150	150	150	150	150	200

** Device cabled according to IEC 60947

TADN - Contactors Typical Applications

Field discharge (2NO+1NC version)

The contactors for this application are intended for using in field circuit of apparatus such as generators, motors, synchronous condensers or exciters and embodying contacts for establishing field discharge circuits.
This contactor is composed of 2 normally open poles (NO) and 1 normally closed pole (NC) and are used for systems up to 1000Vdc. 2 NO poles charge the stator excitation field winding circuit while the 1 NC pole connected to the discharge resistor discharges the flux from the stator field winding.

These three poles are operated at the same time through the common shaft and the operation sequence between NO and NC poles follows these rules:

a) Normally open contacts (Main contacts), opened when the contactor is open, are used to energize the field circuit of main apparatus.

b) Normally closed contacts (Discharge contact), closed when the contactor is open, are used to short-circuit, through a proper discharge resistor, the field circuit at the instant preceding the opening of the main contacts. Moreover, when the contactor is closed, the discharge contacts disconnect the field circuit from the discharge resistor, at the instant following the closing of the main contacts.

c) The closing system is a mechanical latch type in order to obtain a bi-stable device for power saving.

The most frequent type of connection, in the case of synchronous generators excited by static exciters, is the one shown in the figured diagram here below.

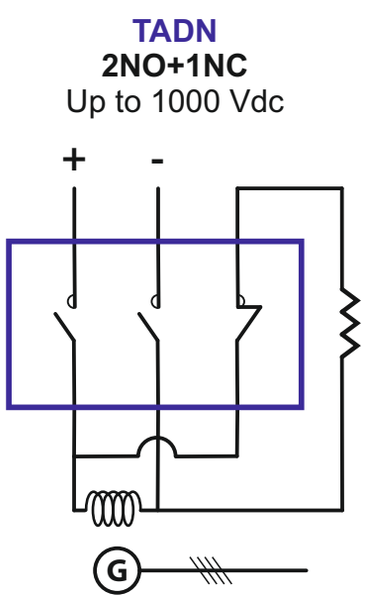

Control Circuit

There are two types of Control Circuits available, both with working range from 85% up to 110% of rated voltage. Each of them can be supplied with AC or DC supply.

Monostable control circuit includes only one Electromagnet and a Power save system to reduce the power consumption during holding.

Bistable control circuit (**TAN**) has one Electromagnet for closing and one Electromagnet for opening with zero power consumption during stable conditions. Thanks to this device the contactor, remains mechanically latched and the closing electromagnet is automatically deenergized after a short delay which ensures a correct latching; the opening operation is made by a proper release electromagnet.
The TAN device includes a low consumption auxiliary contactor which controls the main closing electromagnet, allowing the operation by simple push buttons or auxiliary contacts. The unit is completed with an anti-pumping device and hand operation levers (on request can be fitted with undervoltage release, see the chapter on customizations).

Auxiliary Circuit

Most of the switching devices have an auxiliary circuit, to signal the main contacts status.
It is possible to choose between two types of auxiliary contacts: Type B for the standard configuration or Type P for higher current values.

Auxiliary Contacts Type B (standard)

Set of 10 instantaneous contacts (5NO + 5NC), double interruption molded type, mounted together on a single frame and simultaneously controlled. It can carry thermal currents up to 10A and can sustain temperatures up to 65°C.

Auxiliary Contacts Type P (available on request)

Single contacts, mounted on the shafts, with adjustable contact gap and pressure and with contact elements in silver. The contact can be NO, NC or CO. **Mirrored** auxiliary contacts can be achieved using P type contacts because of the direct mechanical linkage with main contacts. The contacts can carry up to 15A of thermal current.

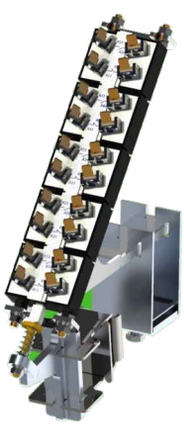



Type	Main Poles Rating	Rated Curr. [A]	Breaking capacity in AC Cos ϕ = 0,5				Breaking capacity in DC L/R = 30ms		
			110V	220V	380V	500V	48V	110V	220V
B	**All rating**	10	10	8	3	1.5	3	2	1
P	**N190**	10	20	15	10	2	5	3	2
	N350 **N650**	10	20	15	15	3	7	5	2
	N1000 **N1250** **N2000** **N3000**	15	20	20	15	5	8	5	2

Auxiliary contacts characteristics

MICROELETTRICA

Weight And Dimensions

Weight for standard configurations:

N - Line Contactors

Type	1NO kg	2NO kg	3NO kg	1NC kg	2NO+1NC kg
N125	6.2	7.2	8.3	6.3	8.4
N190	6.7	8	10.5	6.8	10.5
N350	13.8	17	22	14	22
N650	16.8	26	38	17	38
N1000	25.8	41	53.5	26	53.5
N1250	28.5	45.5	59.7	27.7	60
N2000	34	52	77	-	70*
N3000	42	68	89.6	-	81*

TADN - Line Contactors

Type	2NO+1NC kg
N125	8.4
N190	10.5
N350	22
N650	38
N1000	53.5
N1250	60
N2000	70*
N3000	81*

* The configuration features a N1250 NC pole.

Overall and fixing dimensions:

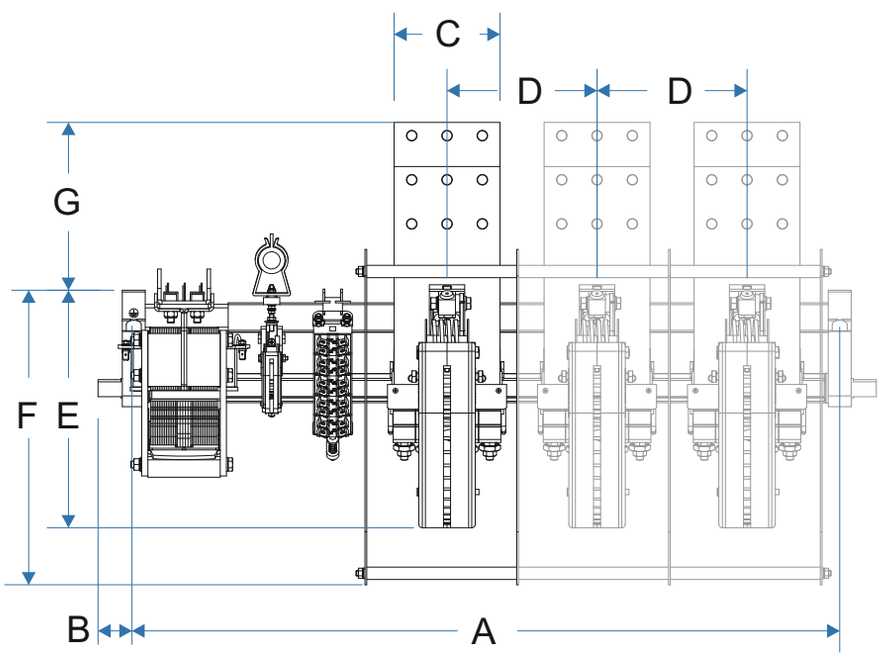

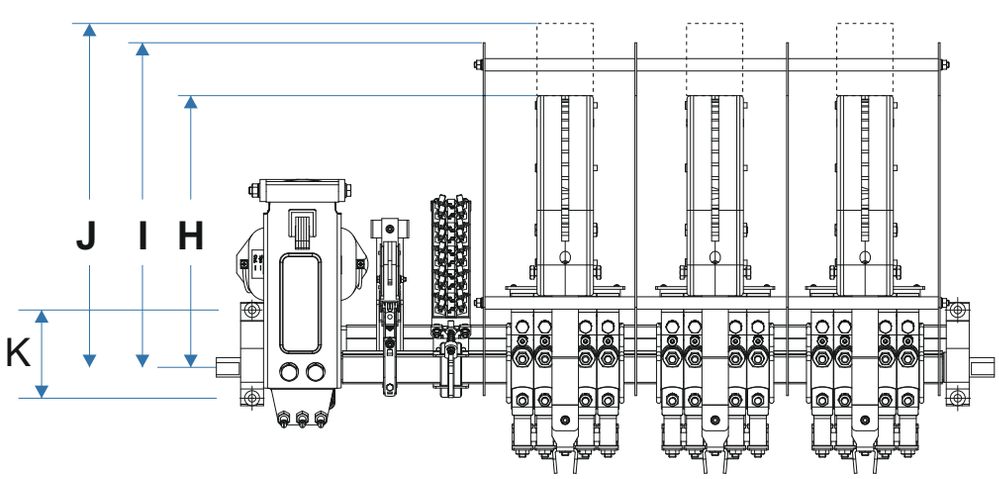

MICROELETTRICA

N - Line Contactors and **TADN** - Line Contactors (equivalent to 2NO+1NC)

Type	Number of poles	A [mm]	B [mm]	C [mm]	D [mm]	E* [mm]	F [mm]	G [mm]	H [mm]	I [mm]	J** [mm]	K [mm]
N125	1NO	250	12.5	18	-	142	164.5	15 (max 32)	115	168	130	60
	2NO	300	12.5	18	50	142	164.5	15 (max 32)	115	168	130	60
	3NO	350	12.5	18	50	142	164.5	15 (max 32)	115	168	130	60
	1NC	250	12.5	18	-	142	164.5	15 (max 32)	115	168	130	60
	2NO+1NC	350	12.5	18	50	142	164.5	15 (max 32)	115	168	130	60
N190	1NO	250	12.5	20	-	142	164.5	17	138	168	188	60
	2NO	300	12.5	20	57	142	164.5	17	138	168	188	60
	3NO	400	12.5	20	57	142	164.5	17	138	168	188	60
	1NC	250	12.5	20	-	142	164.5	17	138	168	188	60
	2NO+1NC	400	12.5	20	57	142	164.5	17	138	168	188	60
N350	1NO	300	12.5	25	-	191	229.5	22	187	233	236	80
	2NO	350	12.5	25	70	191	229.5	22	187	233	236	80
	3NO	450	12.5	25	70	191	229.5	22	187	233	236	80
	1NC	300	12.5	25	-	191	229.5	22	187	233	236	80
	2NO+1NC	450	12.5	25	70	191	229.5	22	187	233	236	80
N650	1NO	300	14	40	-	186.5	229.5	36 (max 64)	194	236	244	80
	2NO	400	14	40	90	186.5	229.5	36 (max 64)	194	236	244	80
	3NO	500	14	40	90	186.5	229.5	36 (max 64)	194	236	244	80
	1NC	300	14	40	-	186.5	229.5	36 (max 64)	194	236	244	80
	2NO+1NC	500	14	40	90	186.5	229.5	36 (max 64)	194	236	244	80
N1000	1NO	350	41	50	-	246	284	32.5 (max 70)	261	292	311	100
	2NO	450	41	50	100	246	284	32.5 (max 70)	261	292	311	100
	3NO	550	41	50	100	246	284	32.5 (max 70)	261	292	311	100
	1NC	350	41	50	-	246	284	32.5 (max 70)	261	292	311	100
	2NO+1NC	550	41	50	100	246	284	32.5 (max 70)	261	292	311	100
N1250	1NO	350	41	60	-	246	284	120	261	292	311	100
	2NO	450	41	60	110	246	284	120	261	292	311	100
	3NO	600	41	60	110	246	284	120	261	292	311	100
	1NC	350	41	60	-	246	284	120	261	292	311	100
	2NO+1NC	600	41	60	110	246	284	120	261	292	311	100
N2000	1NO	350	41	80	-	270	334	138	282	342	332	100
	2NO	500	41	80	130	270	334	138	282	342	332	100
	3NO	650	41	80	130	270	334	138	282	342	332	100
	1NC	-	-	-	-	-	-	-	-	-	-	-
	2NO+1NC	650	41	80	130	270	334	138	282	342	332	100
N3000	1NO	400	41	120	-	270	334	190	282	342	332	100
	2NO	600	41	120	170	270	334	190	282	342	332	100
	3NO	800	41	120	170	270	334	190	282	342	332	100
	1NC	-	-	-	-	-	-	-	-	-	-	-
	2NO+1NC	800	41	120	170	270	334	190	282	342	332	100

* Maximum possible dimension between Control unit (from N85 to N190) and Pole arc-chute (from N350)

** Dimension necessary to remove the Arc chute

Customizations Available

Combination of different main poles assembled on the same shaft.
Different type (NO, NC poles) and size (poles are pairable inside ranges: 85A to 190A, 350A to 650A, 1000A to 3000A)

Parallel connection of pole to reach up to 12000A rating.
Thanks to modular assembling structure, higher current ratings are reachable using parallel connection of NO or NC poles.

Delayed NC pole
For configurations including NC and NO poles, the NC pole closing can be delayed up to 200ms using a dedicated module.

Wide range of voltage supply
Power supply flexibility from 12V to 500V (AC or DC)

Special contacts
Special versions for low currents, low voltages, and heavy-duty applications.

Redundant shunt trip relay for TADN and TAN (available at any voltage)
For bistable contactors with mechanical latch is possible to add a second shunt trip relay with independent power supply.

Undervoltage relay
For safety purpose it is possible to install a module for opening operation in case of supply fault.

Wide number and type of aux contacts assembled on the same shaft.
It is possible to combine several Type B and Type P auxiliary contacts on the same contactor.

Horizontal and vertical mechanical interlock
Two or more contactors can be managed with the same interlocking, either concordant or discordant

Special fixing points
Mounting brackets are available to fit all installation needs inside cubicles or specific customer requirements.

Draw out execution.
Solution to withdraw and disconnect the contactor using a dedicated module inside the cubicle, three positions are allowed: «Service», «Test» and «Out of Service», with mechanical and electrical indication.

Key lock
Key lock system to ensure safe grounding, can be used for locking the contactor in either closed or open condition.

Operation counter(s)
Two alternative options: operations counter mechanically fixed on the contactor and electronic counter connected to the main coil.

Ordering Codes

N - Line standard configurations

Thermal Current [Ith]		Coil Voltage			
Type	Poles	110Vdc	110Vac	220Vdc	220Vac
N125	1NO	N00001251000003	N00001251000002	N00001251000004	N00001251000005
	2NO	N00001252000001	N00001252000002	N00001252000003	N00001252000004
	3NO	N00001253000002	N00001253000004	N00001253000005	N00001253000003
	1NC	N00001250100003	N00001250100002	N00001250100004	N00001250100005
	2NO+1NC	N00001252100001	N00001252100003	N00001252100002	N00001252100004
N190	1NO	N00001901000002	N00001901000001	N00001901000003	N00001901000004
	2NO	N00001902000003	N00001902000002	N00001902000004	N00001902000001
	3NO	N00001903000003	N00001903000001	N00001903000004	N00001903000002
	1NC	N00001900100003	N00001900100002	N00001900100004	N00001900100005
	2NO+1NC	N00001902100001	N00001902100004	N00001902100002	N00001902100003
N350	1NO	N00003501000102	N00003501000103	N00003501000101	N00003501000104
	2NO	N00003502000004	N00003502000002	N00003502000005	N00003502000003
	3NO	N00003503000003	N00003503000001	N00003503000004	N00003503000002
	1NC	N00003500100006	N00003500100004	N00003500100007	N00003500100005
	2NO+1NC	N00003502100004	N00003502100006	N00003502100005	N00003502100007
N650	1NO	N00006501000003	N00006501000004	N00006501000005	N00006501000006
	2NO	N00006502000005	N00006502000003	N00006502000007	N00006502000006
	3NO	N00006503000005	N00006503000004	N00006503000006	N00006503000007
	1NC	N00006500100003	N00006500100004	N00006500100005	N00006500100006
	2NO+1NC	N00006502100004	N00006502100006	N00006502100005	N00006502100007
N1000	1NO	N00010001000001	N00010001000002	N00010001000003	N00010001000004
	2NO	N00010002000002	N00010002000003	N00010002000004	N00010002000005
	3NO	N00010003000004	N00010003000005	N00010003000003	N00010003000008
	1NC	N00010000100004	N00010003000005	N00010000100006	N00010000100001
	2NO+1NC	N00010002100003	N00010002100004	N00010002100001	N00010002100002
N1250	1NO	N00012501000104	N00012501000103	N00012501000102	N00012501000105
	2NO	N00012502000002	N00012502000004	N00012502000003	N00012502000005
	3NO	N00012503000005	N00012503000004	N00012503000006	N00012503000003
	1NC	N00012500100003	N00012500100007	N00012500100002	N00012500100006
	2NO+1NC	N00012502100002	N00012502100003	N00012502100004	N00012502100005
N2000	1NO	N00020001000006	N00020001000005	N00020001000003	N00020001000004
	2NO	N00020002000002	N00020002000003	N00020002000004	N00020002000001
	3NO	N00020003000008	N00020003000002	N00020003000009	N00020003000006
	1NC	-	-	-	-
	2NO+1NC*	N00020002100006	N00020002100005	N00020002100004	N00020002100001
N3000	1NO	N00030001000001	N00030001000003	N00030001000002	N00030001000004
	2NO	N00030002000004	N00030002000001	N00030002000005	N00030002000007
	3NO	N00030003000003	N00030003000004	N00030003000001	N00030003000005
	1NC	-	-	-	-
	2NO+1NC*	N00030002100003	N00030002100004	N00030002100001	N00030002100002

* The NC pole is a N1250

Thermal Current [Ith]	Coil Voltage			
Type	110Vdc	110Vac	220Vdc	220Vac
TADN125	TADN01252100004	TADN01252100006	TADN01252100005	TADN01252100007
TADN190	TADN01902100002	TADN01902100004	TADN01902100001	TADN01902100005
TADN350	TADN03502100004	TADN03502100005	TADN03502100006	TADN03502100007
TADN650	TADN06502100004	TADN06502100005	TADN06502100003	TADN06502100006
TADN1000	TADN10002100003	TADN10002100004	TADN10002100005	TADN10002100006
TADN1250	TADN12502100023	TADN12502100024	TADN12502100004	TADN12502100025
TADN2000	TADN20002100003	TADN20002100004	TADN20002100005	TADN20002100006
TADN3000	TADN30002100002	TADN30002100003	TADN30002100004	TADN30002100005

The technical specifications reported are not binding and they should be agreed in the contract.

For further technical information on our products visit www.microelettrica.com

Microelettrica Scientifica S.p.A.

20090 Buccinasco (MI) , Via Lucania 2, Italy
Tel.: +39 02 575731
E-mail: info@microelettrica.com
www.microelettrica.com

KNORR-BREMSE
NEW YORK AIR BRAKE
IFE
MERAK
MICROELETTRICA
SELECTRON
EVAC
ZELISKO
RAILSERVICES

This publication may be subject to alteration without prior notice. Therefore, a printed copy of this document may not be the late st revision. Please contact your local representative for the latest update. The trademarks K Microelettrica, Knorr and Knorr-Bremse as well as the figurative mark "K" are registered. Copyright © Knorr-Bremse AG and Microelettrica Scientifica S.p.A. - all rights reserv ed, including industrial property rights application. Knorr-Bremse AG and Microelettrica Scientifica S.p.A. retain any power of dispo sal, such as for copying and transferring