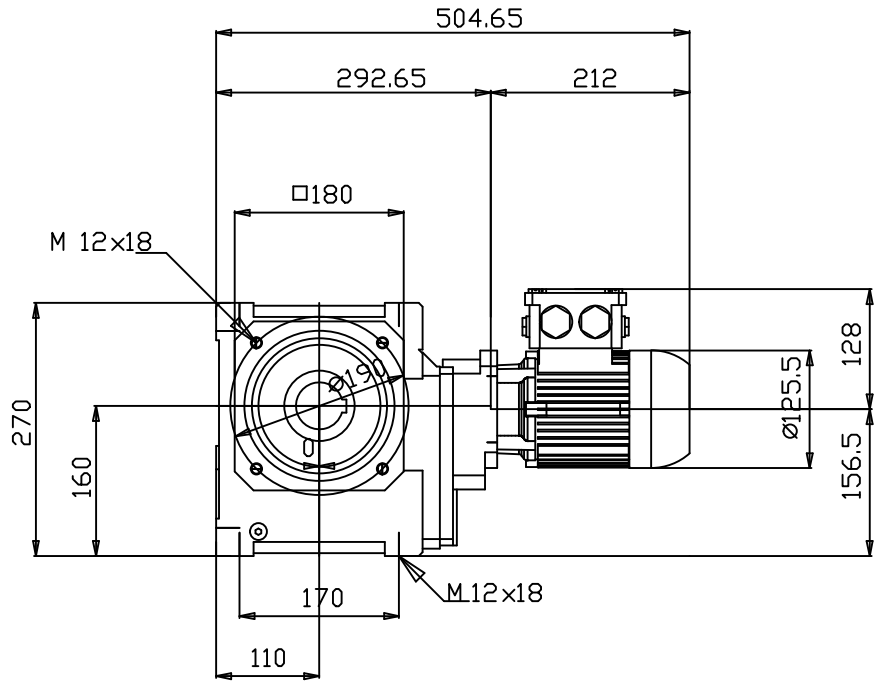

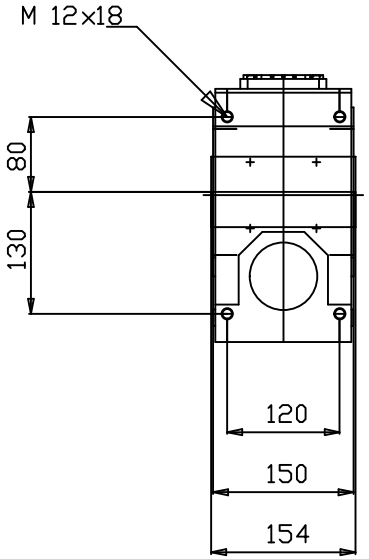

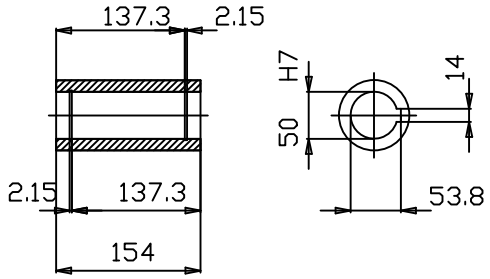

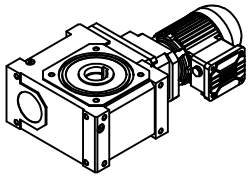

Mounting position V20

Dimension sheet is proportional.
All dimension in mm.
Technical data are subject to change.

ID -	Notes: -
Date: 13/11/2026	Type code MAS S609 3 HH 63 0.12kW 4P W21