NICOTRA Gebhardt

The requested fan is no longer available. As a replacement, we are offering an EC unit with integrated control electronics. Control and speed adjustment must be done via a 0-10 V signal provided on-site (e.g., a potentiometer). The current motor has higher power. The required airflow can be adjusted accordingly using the potentiometer. The housing dimensions are the same as the previous unit. Existing control devices are not compatible with this model and cannot be reused.
!!!Please check the on-site requirements for using the unit beforehand !!!

Specification of: DDMP 18/18 M6M4 DG7 400V-3F +FL

High performance centrifugal fan DDMP
Double width, double inlet (DWDI), direct drive, forward curved blades fan. Lap-jointed scroll made of galvanized steel (EN 10142), assembled through a high-technology roller-locked seaming. Straight cut off plate at fan discharge. Impeller with forward curved blades of galvanized steel plate, directly mounted on a brushless, permanent magnets, external rotor motor, without transmission losses, dynamically balanced according to DIN ISO 21940-11. Highly-efficient 5,5kW three-phase sensor-less driver, with advanced control algorithm, passive EMI filters and thermal derating protection. Driver directly installed on the scroll, and factory-configured, for a plug and play solution: no further configuration is needed. Continuous speed control of the Drive System by 0 ... 10 V analogue signal, or with Modbus RS485-compliant interface. All the drive system is completely in protection class IP 54. Power source 400V – 50/60 Hz. Air performance ratings according to AMCA 210-07 (Fig. 12) and ISO 5801:1997 (Fig. 69 c and par. 30.2 f).

Technical data of the fan: DDMP 18/18 M6M4 DG7 400V-3F +FL

fulfills the ErP requirements 2026

Description	Value	Dimension
Specified duty point		
Actual duty point		
Installation acc. DIN 24163 Part 1	B	
Reference density (Rho1)	1.20	kg/m³
Medium temperature (t)	20	C
Fan weight	52	kg
This duty point can only be reached by using an inverter/controller for motor speed control!		
Rated data		
Phases-Voltage-Frequency	3~400-50/60	V-Hz
Rated motor speed (n_N)	1100	min^{-1}
Rated motor current (I_N)	6,2	A
operational limits		
Max. absorbed power (P_{1max})	3.93	kW
Temperature range of conveying medium (t_{min} ...t_{max})	-20...40	C
ErP-Data at best efficiency and density - kg/m^3		
measurement- / efficiency category	B / total	
design status of VSD	VSD is integrated	
overall efficiency (ETA_{opt})	64.9	%
achieved efficiency grade (N_{ist})	70.2	
required efficiency grade N in 2015 / 2026	49 / 57	
Air flow rate (V_{opt})	10225	m³/h
pressure rise (dp_{opt})	729	Pa
Fan speed (n_{vopt})	921	min^{-1}
motor power input (P_{1opt})	3.19	kW
specific ratio (d_{dpopt})	1.007	

Fan curve to DDMP 18/18 M6M4 DG7 400V-3F +FL

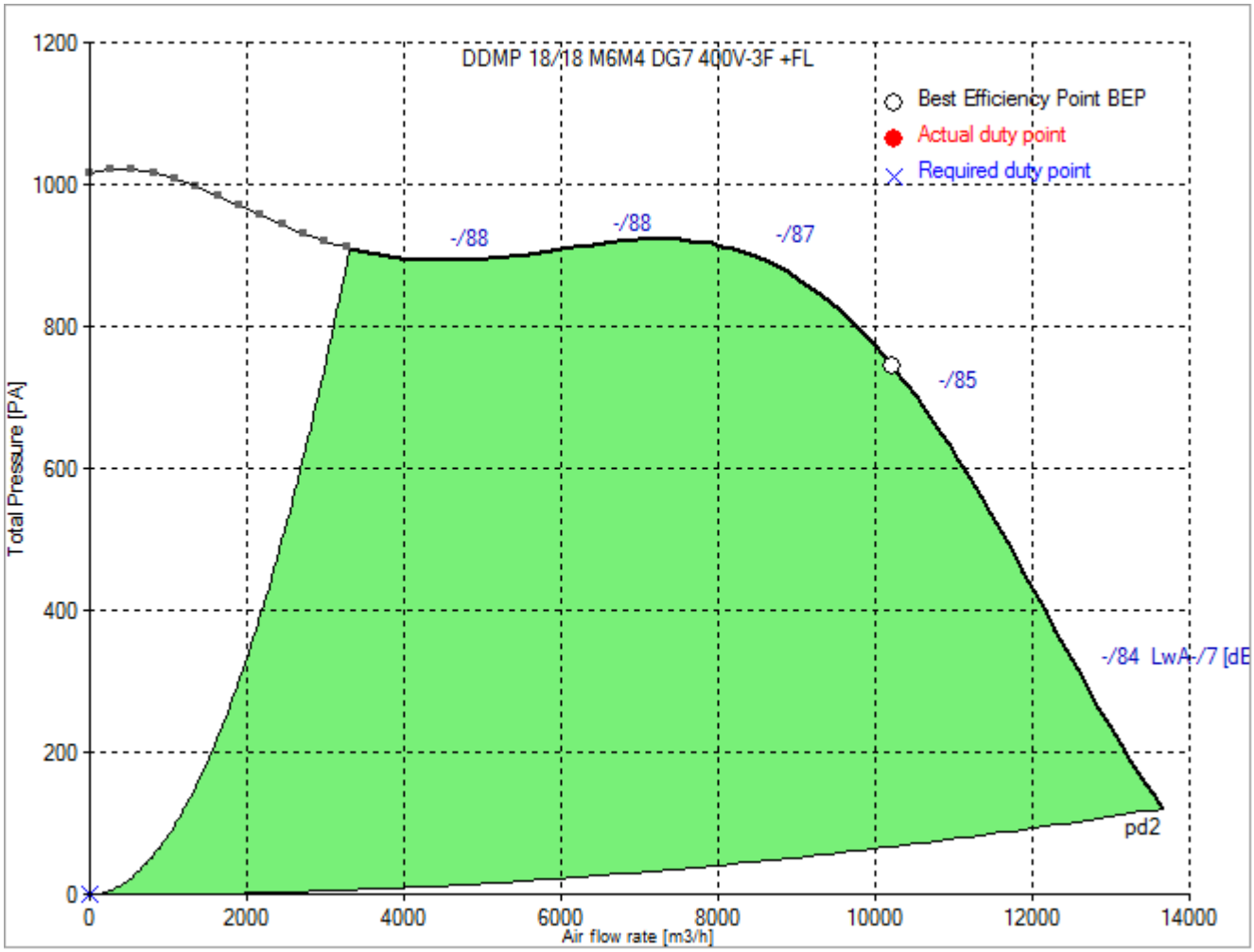

Dimensions to DDMP 18/18 M6M4 DG7 400V-3F +FL

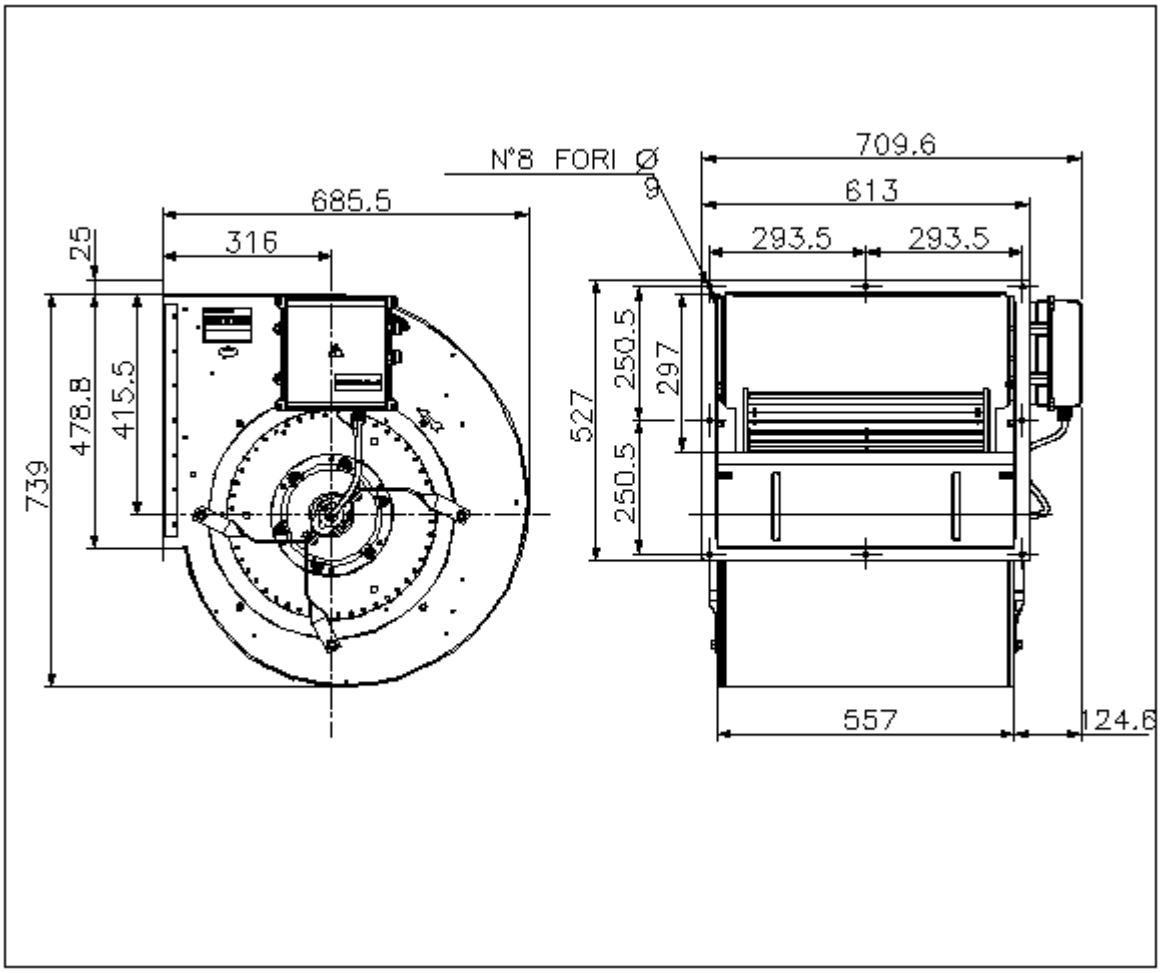

Rotation:	RD
Handing:	90

Wiring diagram of the fan DDMP 18/18 M6M4 DG7 400V-3F +FL

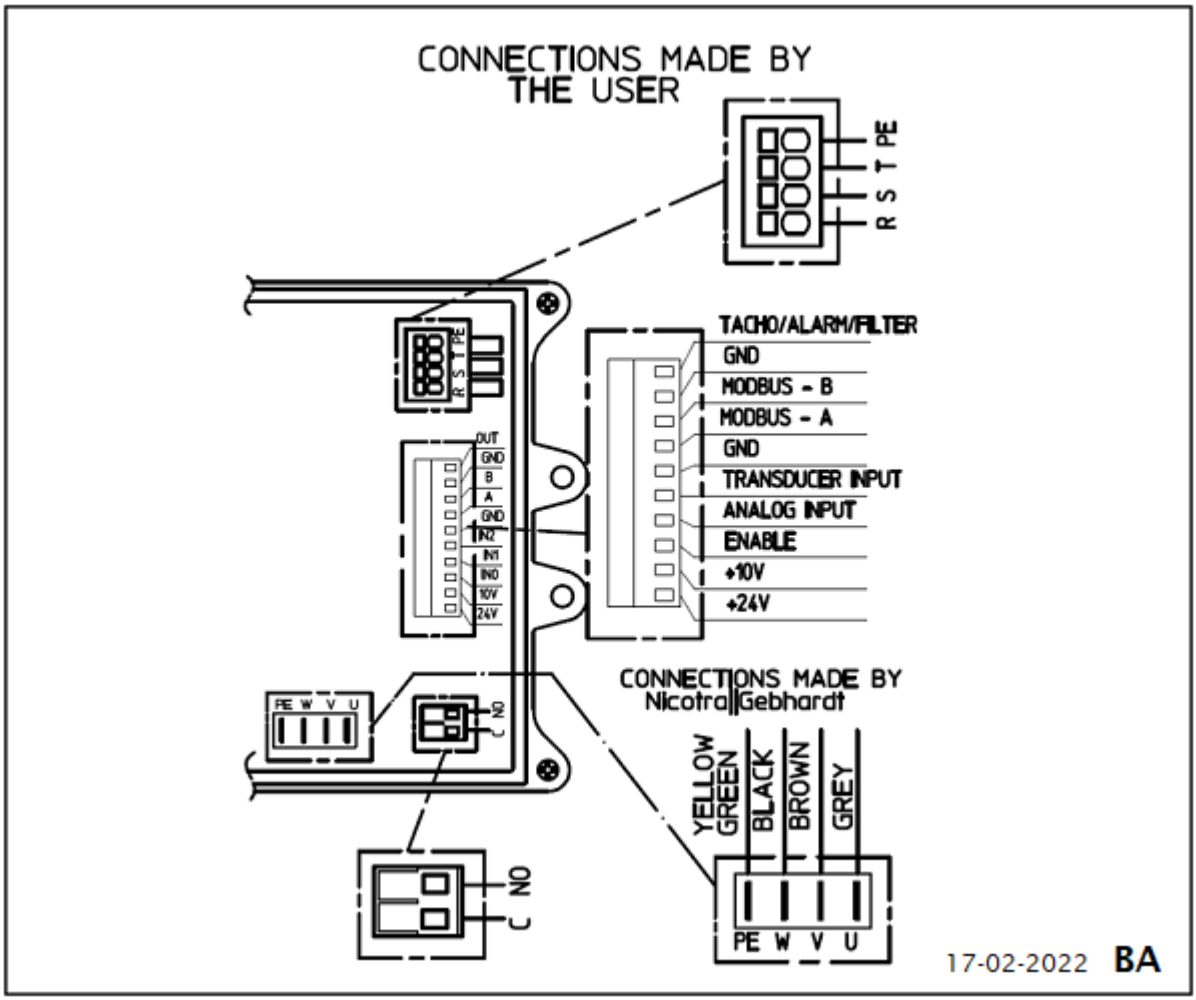

Wiring diagram for connection to: mains - VSD - motor
Rotation: LG