StackChan

SKU:K151/K151-R
































Description

StackChan is a super kawaii AI desktop robot co-created by M5Stack and the user community. It uses the M5Stack **flagship IoT development kit CoreS3** as its main controller, powered by an ESP32-S3 SoC featuring a 240 MHz dual-core processor, with 16MB Flash and 8MB PSRAM onboard, and supporting Wi-Fi and BLE. The main unit also integrates a 2.0-inch capacitive touch display with a high-strength glass cover, a 0.3 MP camera, a proximity & ambient light sensor, a 9-axis IMU (accelerometer + gyroscope + magnetometer), a microSD card slot, a 1W speaker, dual microphones, and power/reset buttons.

The **robot body**, connected to the main unit, includes a USB-C interface for power and data, a 550 mAh battery, two feedback servos (360-degree continuous rotation on the horizontal axis and 90-degree movement on the vertical axis), two rows totaling 12 RGB LEDs, infrared transmitter and receiver, a three-zone touch panel, and a full-featured NFC module.

The **factory firmware** is feature-rich, including an AI Agent, lively and expressive animations, ESP-NOW wireless remote control, and online app downloads. It can connect to a mobile app for video viewing, remote avatar control, and more, and also supports online updates (OTA). The product also supports programming via Arduino, UiFlow2, and other methods, and can connect to various expansion units in the M5Stack ecosystem, making it easy to implement a wide range of custom functions.

Thank you to the contributors of the StackChan community, especially:



@meganetaaan

Shinya Ishikawa

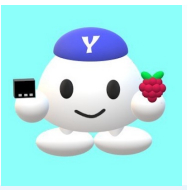

@mongonta555

Takao Akaki

Tutorial

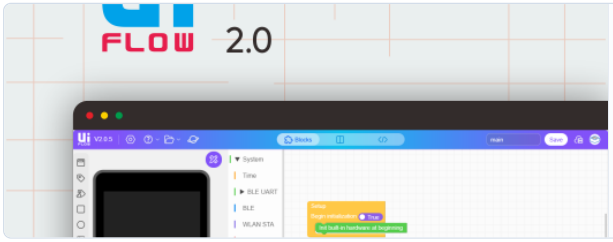

UiFlow2

This tutorial will guide you through controlling StackChan using the UiFlow2 graphical programming platform.

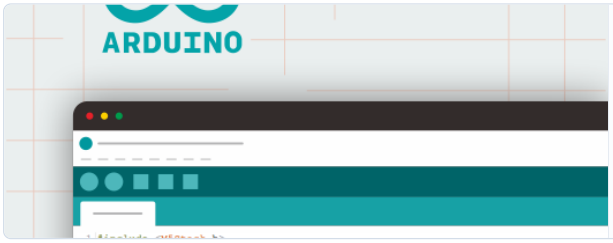

Arduino IDE

This tutorial explains how to program and control the StackChan device using Arduino IDE.



Factory Firmware Guide

Introduction to the StackChan factory firmware, including binding and setup with the mobile app, as well as instructions for using all features.



Qoder Companion Robot

Introduces Qoder's firmware flashing, network configuration, and how to get started with StackChan.

Note

Motor Safety

Do not forcibly rotate any movable parts connected to the motors by hand when you are unsure whether the motors are powered and under control, as this may cause hardware damage.

Motion Angle Notice

The movement angle of the StackChan Y-axis servo (vertical direction) is recommended to be controlled within 5 ~ 85°. Operating at extreme

angles may cause servo stall and permanent damage. No angle restriction is required for the X-axis.

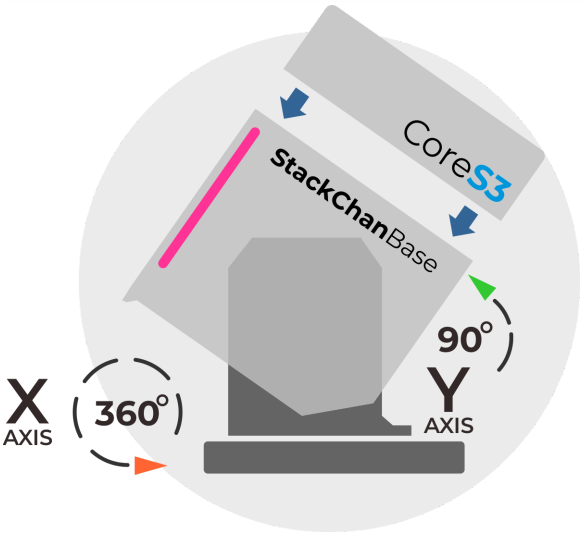

Stackchan App

The Stackchan App supports connections only to original StackChan core controllers, including those in the standard StackChan unit and the Remote Controller Kit, as well as the separately sold StackChan Core replacement controller. Before use, the StackChan user firmware must be flashed to the device. Note that this app cannot connect to non-original core models such as CoreS3, CoreS3-SE, and CoreS3-Lite.

Features

- Based on the CoreS3 main unit
  - For detailed information, please refer to the CoreS3 page
- Robot body
  - USB-C interface for power and data
  - 550 mAh battery
  - Two feedback servos (360-degree continuous rotation on the horizontal axis and 90-degree movement on the vertical axis)
  - Two rows totaling 12 RGB LEDs
  - Infrared transmitter and receiver
  - Top-mounted three-zone touch panel
  - Full-featured NFC
- Development platforms
  - UiFlow2
  - Arduino IDE
  - PlatformIO
  - ESP-IDF

Includes

StackChan (SKU:K151)

- 1 x Carrying bag or box (depending on the purchased product bundle)
- 1 x StackChan unit (with CoreS3 pre-installed)
- 1 x USB Type-C Cable
- 1 x 1.25-4P male-to-female straight extension cable (100mm)
- 1 x Hex Key L-Shape 1.5mm (For M2 Screw)
- 1 x Hex Key L-Shape 2.5mm (For M3 Screw)
- 1 x Character expression sticker

- 1 x Printed user manual

StackChan Remote Controller Kit (SKU:K151-R)

- 1 x Carrying bag or box (depending on the purchased product bundle)
- 1 x StackChan unit (with CoreS3 pre-installed)
- 1 x Remote controller (assembled from a **Hat Mini JoyC** and **StickC-Plus**)
- 1 x USB Type-C Cable
- 1 x 1.25-4P male-to-female straight extension cable (100mm)
- 1 x Hex Key L-Shape 1.5mm (For M2 Screw)
- 1 x Hex Key L-Shape 2.5mm (For M3 Screw)
- 1 x Character expression sticker
- 1 x Printed user manual

Applications

- Desktop companion
- AI agent
- Voice-based question and answer
- Smart home
- IoT control

Specifications

Specification	Parameter
Main Controller	ESP32-S3 Xtensa® dual-core 32-bit LX7, 240 MHz 16MB Flash, 8MB Quad PSRAM
Wireless Connectivity	2.4 GHz Wi-Fi, IEEE 802.11 b/g/n Bluetooth® 5 LE Infrared receiver IRM56384 + infrared transmitter
Wired Connectivity	USB CDC & full-speed USB OTG GPIO, UART, I2C
Display	2.0-inch IPS LCD, resolution 320*240, 65536 colors, ILI9342C / ILI9342E driver Capacitive multi-touch, FT6336U driver
Camera	GC0308, 640*480, 0.3 MP
Sensors	Dual microphones, ES7210 audio codec Proximity & ambient light sensor LTR-553ALS-WA 9-axis IMU BMI270 + BMM150 (accelerometer + gyroscope + magnetometer) Three-zone touch panel, Si12T driver Full-featured NFC ST25R3916
Human Interactions	1W speaker, AW88298 16-bit I2S power amplifier RGB LEDs WS2812C * 12 Power and reset buttons Power indicator LED
Expansions	microSD card slot Grove interface * 3 LEGO®-compatible mounting holes
Motors	360-degree horizontal servo with feedback 90-degree vertical servo with feedback
Power	550 mAh battery USB-C power and data Power management IC AXP2101, RTC BM8563
Product Size	54.0 x 70.5 x 61.5mm
Product Weight	StackChan: 187.2g Remote Controller: 37.6g
Package Size	StackChan: 142.0 x 101.0 x 58.0mm StackChan Remote: 155.0 x 109.0 x 65.0mm
Gross Weight	StackChan: 272.4g StackChan Remote: 372.9g

Learn

BMM150 Magnetic Interference

Magnets may interfere with the BMM150 geomagnetic sensor and cause abnormal readings. If you need to calculate device orientation using geomagnetic data, please avoid placing the device near strong magnetic fields.

Power On/Off

- **Power on**: Single-click the power button (located next to the USB-C port on the left side).

- **Power off**: Press and hold the power button (located next to the USB-C port on the left side).
- **Reset / Reboot**: Single-click the RST reset button (located next to the microSD card slot on the bottom side).



Download Mode

Connect StackChan to a computer using a USB Type-C data cable (both the USB-C port on the main unit and the one on the base support data transmission. However, it is recommended to use the port on the base to avoid accidents caused by motor movement). Press and hold the RST reset button for 3 seconds (located next to the microSD card slot on the bottom side). When the indicator LED next to the button turns green, release the button. The green LED turns off, indicating that the device has entered download mode.

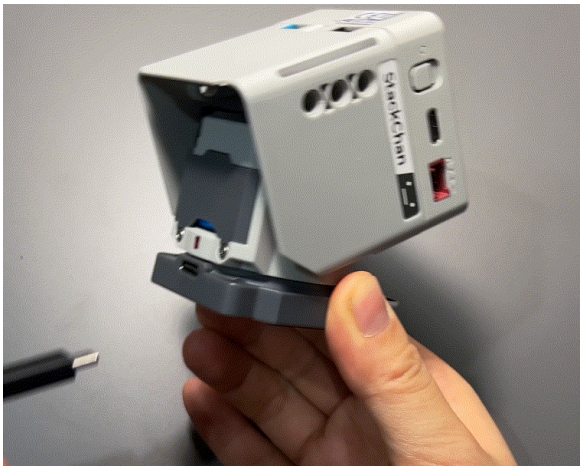

Schematics

- StackChan Host CoreS3 Schematic PDF
- StackChan Base Adapter Board Schematic PDF
- StackChan Base Power Board Schematic PDF
- StackChan Base Ring Board Schematic PDF
- StackChan Base Touch Board Schematic PDF

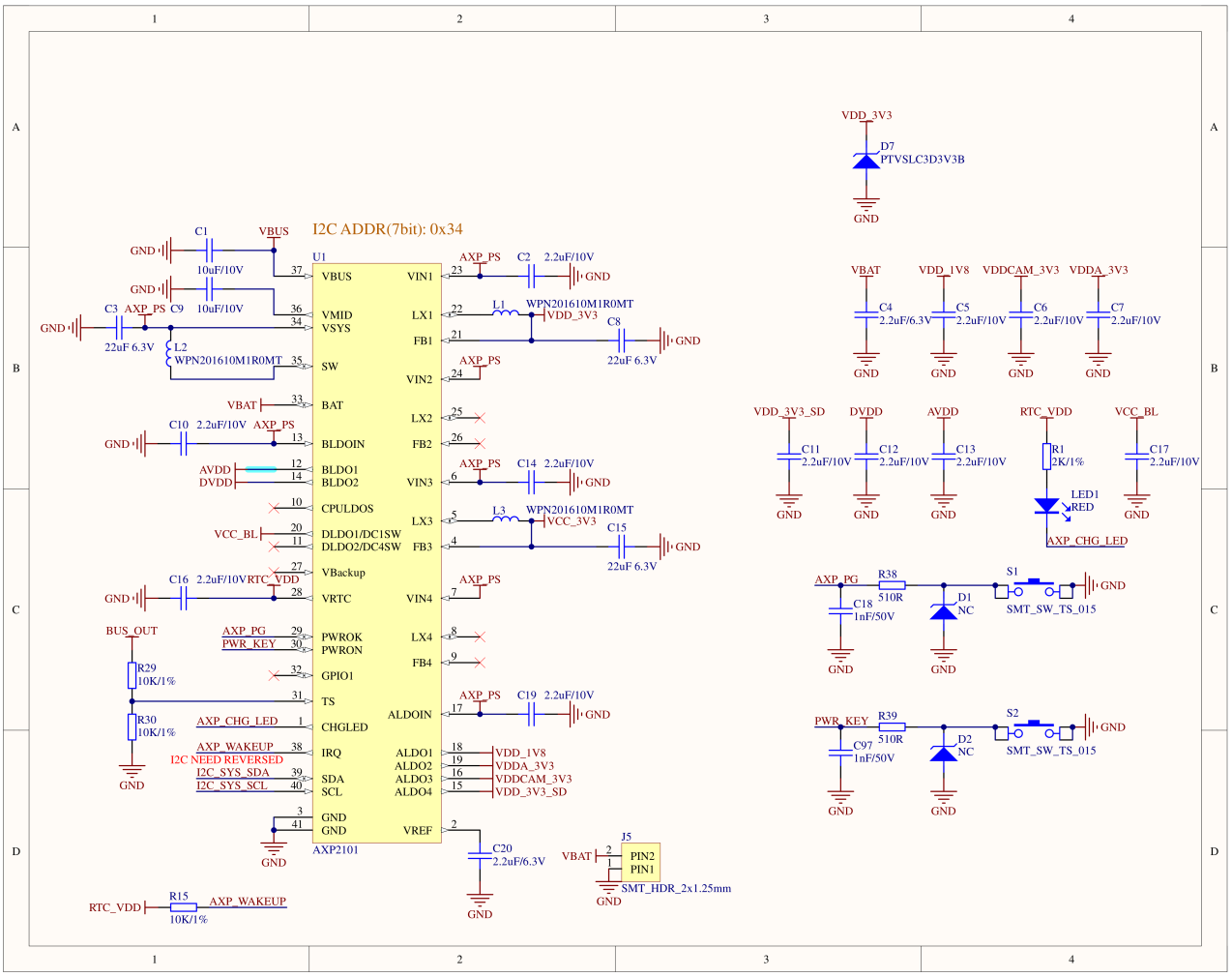
I2C ADDR(7bit): 0x34
U1
AXP2101
VBUS
VMID
VSYS
SW
BAT
BLDOIN
BLDO1
BLDO2
CPULDOS
DLDO1/DC1SW
DLDO2/DC4SW
VBackup
VRTC
PWROK
PWRON
GPIO1
TS
CHGLED
IRQ
SDA
SCL
GND
GND
VIN1
LX1
FB1
VIN2
LX2
FB2
VIN3
LX3
FB3
VIN4
LX4
FB4
ALDOIN
ALDO1
ALDO2
ALDO3
ALDO4
VREF
I2C NEED REVERSED
VDD_3V3
D7
PTVSLC3D3V3B
VBAT
VDD_1V8
VDDCAM_3V3
VDDA_3V3
VDD_3V3_SD
DVDD
AVDD
RTC_VDD
VCC_BL
LED1
RED
AXP_CHG_LED
S1
S2
SMT_SW_TS_015
D1
D2
NC
J5
PIN2
PIN1
SMT_HDR_2x1.25mm
WPN201610M1R0MT
AXP_PS
AXP_PG
PWR_KEY
BUS_OUT
AXP_WAKEUP
I2C_SYS_SDA
I2C_SYS_SCL

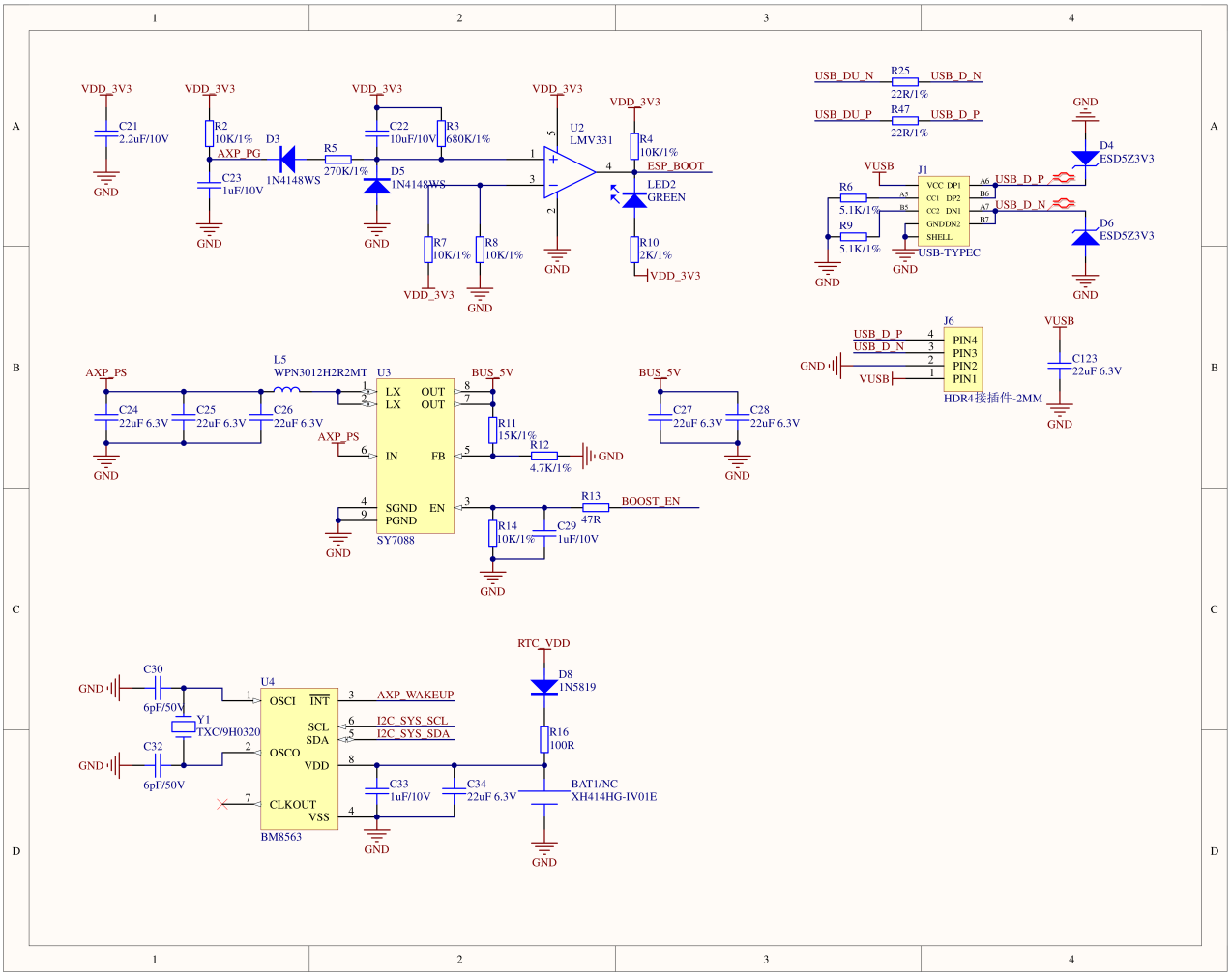
U2
LMV331
U3
SY7088
L5
WPN3012H2R2MT
U4
BM8563
Y1
TXC/9H0320
D8
1N5819
BAT1/NC
XH414HG-IV01E
D3
D5
1N4148WS
LED2
GREEN
ESP_BOOT
BOOST_EN
VDD_3V3
BUS_5V
AXP_PS
AXP_PG
USB_DU_N
USB_DU_P
USB_D_N
USB_D_P
VUSB
USB-TYPEC
D4
D6
ESD5Z3V3
J6
HDR4接插件-2MM
OSCI
OSCO
CLKOUT
INT
SCL
SDA
VDD
VSS
LX
OUT
IN
FB
SGND
PGND
EN

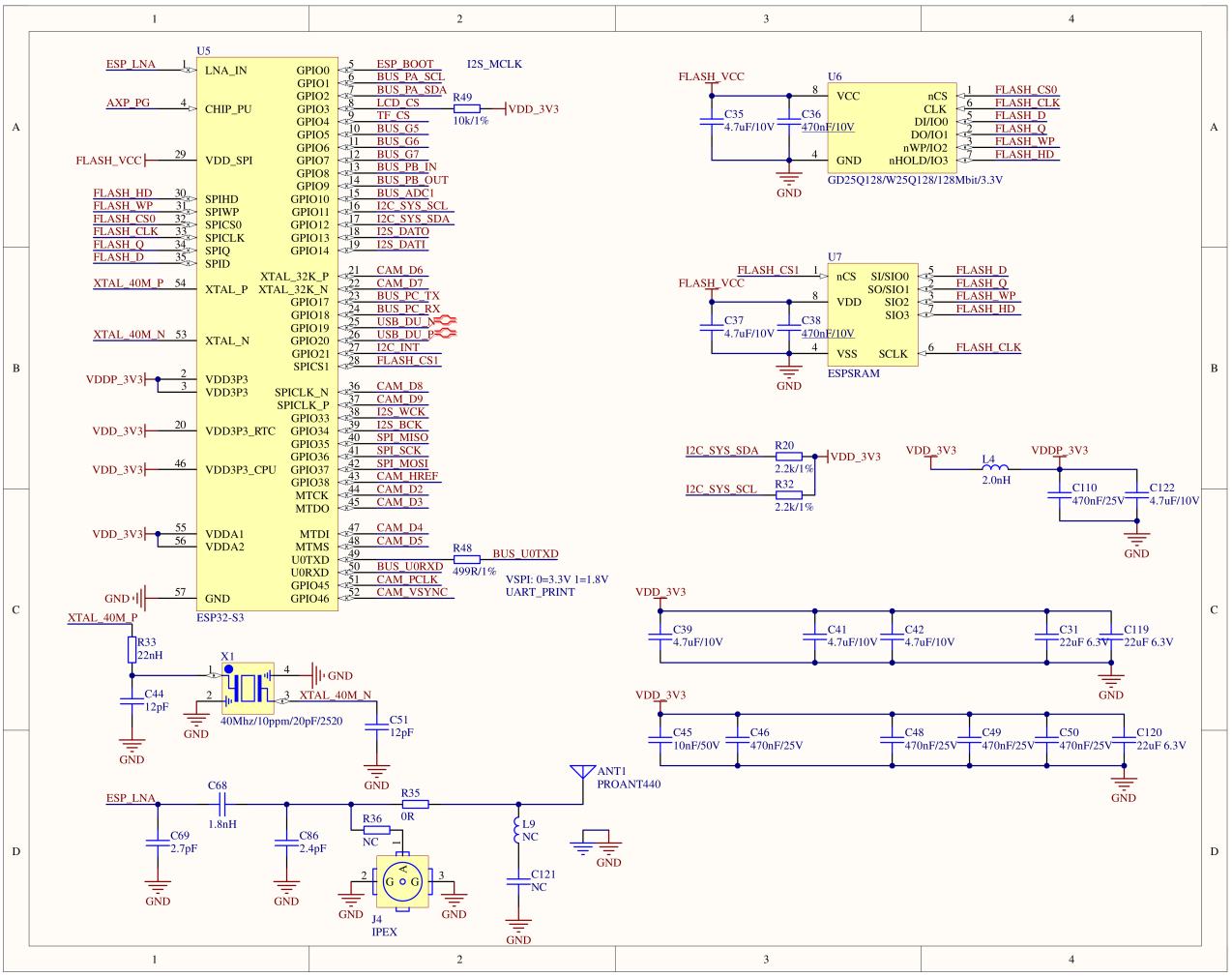
U5
ESP32-S3
LNA_IN
CHIP_PU
VDD_SPI
SPIHD
SPIWP
SPICS0
SPICLK
SPIQ
SPID
XTAL_P
XTAL_N
VDD3P3
VDD3P3_RTC
VDD3P3_CPU
VDDA1
VDDA2
GND
GPIO0
GPIO1
GPIO2
GPIO3
GPIO4
GPIO5
GPIO6
GPIO7
GPIO8
GPIO9
GPIO10
GPIO11
GPIO12
GPIO13
GPIO14
XTAL_32K_P
XTAL_32K_N
GPIO17
GPIO18
GPIO19
GPIO20
GPIO21
SPICS1
SPICLK_N
SPICLK_P
GPIO33
GPIO34
GPIO35
GPIO36
GPIO37
GPIO38
MTCK
MTDO
MTDI
MTMS
U0TXD
U0RXD
GPIO45
GPIO46
ESP_LNA
AXP_PG
FLASH_VCC
FLASH_HD
FLASH_WP
FLASH_CS0
FLASH_CLK
FLASH_Q
FLASH_D
XTAL_40M_P
XTAL_40M_N
VDDP_3V3
VDD_3V3
GND
ESP_BOOT
BUS_PA_SCL
BUS_PA_SDA
LCD_CS
TF_CS
BUS_G5
BUS_G6
BUS_G7
BUS_PB_IN
BUS_PB_OUT
BUS_ADC1
I2C_SYS_SCL
I2C_SYS_SDA
I2S_DATO
I2S_DATI
CAM_D6
CAM_D7
BUS_PC_TX
BUS_PC_RX
USB_DU_N
USB_DU_P
I2C_INT
FLASH_CS1
CAM_D8
CAM_D9
I2S_WCK
I2S_BCK
SPI_MISO
SPI_SCK
SPI_MOSI
CAM_HREF
CAM_D2
CAM_D3
CAM_D4
CAM_D5
BUS_U0RXD
CAM_PCLK
CAM_VSYNC
I2S_MCLK
R49
10k/1%
R48
499R/1%
BUS_U0TXD
VSPI: 0=3.3V 1=1.8V
UART_PRINT
R33
22nH
X1
40Mhz/10ppm/20pF/2520
C44
12pF
C51
12pF
C68
1.8nH
C69
2.7pF
C86
2.4pF
R35
0R
R36
NC
L9
NC
C121
NC
ANT1
PROANT440
J4
IPEX
U6
GD25Q128/W25Q128/128Mbit/3.3V
nCS
CLK
DI/IO0
DO/IO1
nWP/IO2
nHOLD/IO3
VCC
C35
4.7uF/10V
C36
470nF/10V
U7
ESPSRAM
SI/SIO0
SO/SIO1
SIO2
SIO3
SCLK
VSS
C37
4.7uF/10V
C38
470nF/10V
R20
2.2k/1%
R32
2.2k/1%
L4
2.0nH
C110
470nF/25V
C122
4.7uF/10V
C39
4.7uF/10V
C41
4.7uF/10V
C42
4.7uF/10V
C31
22uF 6.3V
C119
22uF 6.3V
C45
10nF/50V
C46
470nF/25V
C48
470nF/25V
C49
470nF/25V
C50
470nF/25V
C120
22uF 6.3V

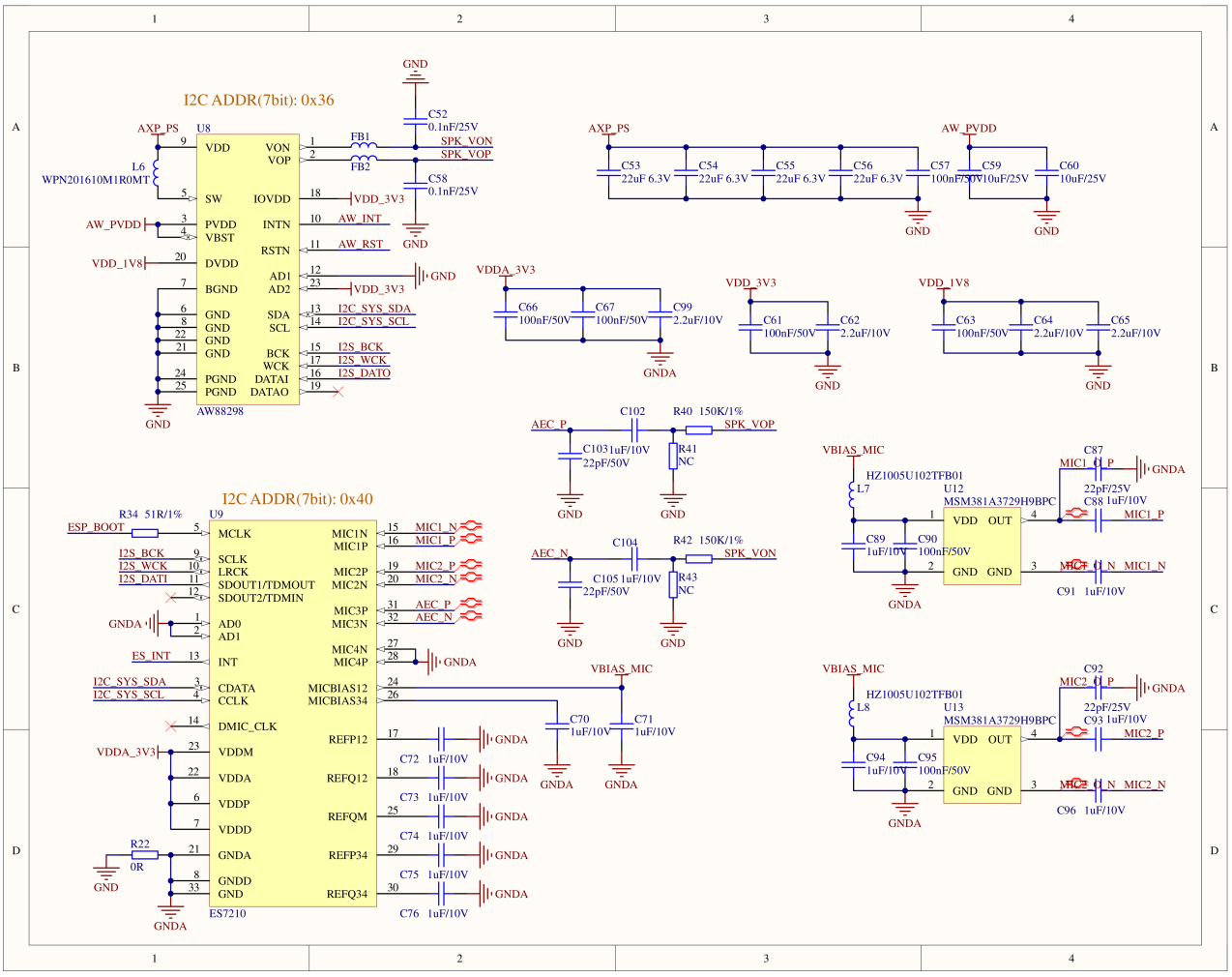
I2C ADDR(7bit): 0x36
U8
AW88298
VDD
VON
VOP
SW
IOVDD
PVDD
VBST
INTN
RSTN
DVDD
AD1
BGND
AD2
GND
SDA
SCL
BCK
WCK
DATAI
DATAO
PGND
AXP_PS
AW_PVDD
VDD_1V8
VDD_3V3
L6
WPN201610M1R0MT
FB1
FB2
SPK_VON
SPK_VOP
C52
0.1nF/25V
C58
0.1nF/25V
AW_INT
AW_RST
I2S_BCK
I2S_WCK
I2S_DATO
I2C_SYS_SDA
I2C_SYS_SCL
C53
22uF 6.3V
C54
22uF 6.3V
C55
22uF 6.3V
C56
22uF 6.3V
C57
100nF/50V
C59
10uF/25V
C60
10uF/25V
VDDA_3V3
C66
100nF/50V
C67
100nF/50V
C99
2.2uF/10V
C61
100nF/50V
C62
2.2uF/10V
C63
100nF/50V
C64
2.2uF/10V
C65
2.2uF/10V
GNDA
I2C ADDR(7bit): 0x40
U9
ES7210
MCLK
SCLK
LRCK
SDOUT1/TDMOUT
SDOUT2/TDMIN
AD0
AD1
INT
CDATA
CCLK
DMIC_CLK
VDDM
VDDA
VDDP
VDDD
GNDA
GNDD
GND
MIC1N
MIC1P
MIC2P
MIC2N
MIC3P
MIC3N
MIC4N
MIC4P
MICBIAS12
MICBIAS34
REFP12
REFQ12
REFQM
REFP34
REFQ34
R34 51R/1%
ESP_BOOT
I2S_BCK
I2S_WCK
I2S_DATI
ES_INT
I2C_SYS_SDA
I2C_SYS_SCL
VDDA_3V3
R22
0R
MIC1_N
MIC1_P
MIC2_P
MIC2_N
AEC_P
AEC_N
C102
R40 150K/1%
C103 1uF/10V
22pF/50V
R41
NC
C104
R42 150K/1%
C105 1uF/10V
22pF/50V
R43
NC
VBIAS_MIC
C70
1uF/10V
C71
1uF/10V
C72 1uF/10V
C73 1uF/10V
C74 1uF/10V
C75 1uF/10V
C76 1uF/10V
HZ1005U102TFB01
L7
L8
U12
U13
MSM381A3729H9BPC
VDD
OUT
GND
C87
C88 1uF/10V
C89
1uF/10V
C90
100nF/50V
C91 1uF/10V
C92
C93 1uF/10V
C94
1uF/10V
C95
100nF/50V
C96 1uF/10V
22pF/25V

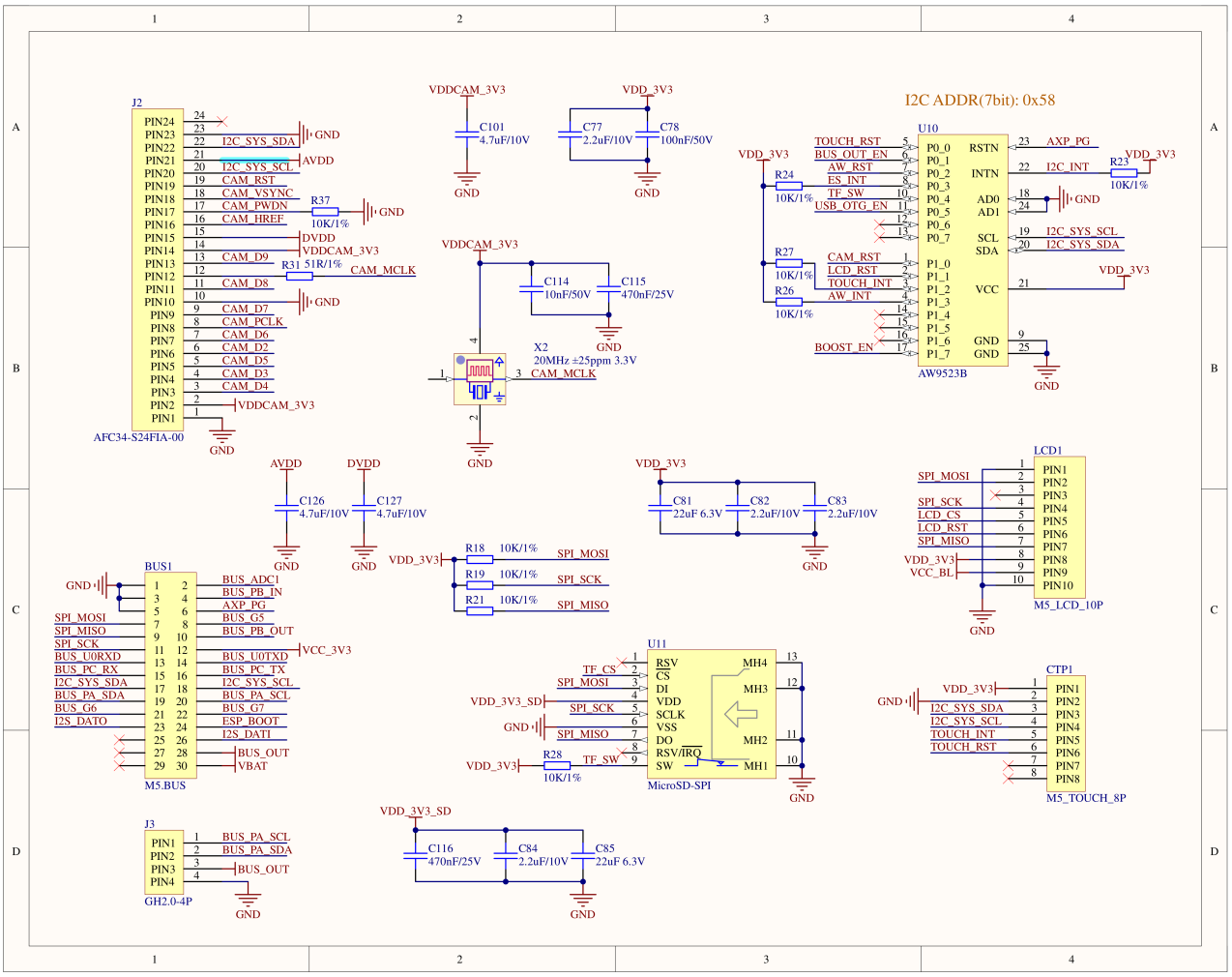
I2C ADDR(7bit): 0x58
J2
AFC34-S24FIA-00
U10
AW9523B
X2
20MHz ±25ppm 3.3V
LCD1
M5_LCD_10P
BUS1
M5.BUS
U11
MicroSD-SPI
CTP1
M5_TOUCH_8P
J3
GH2.0-4P

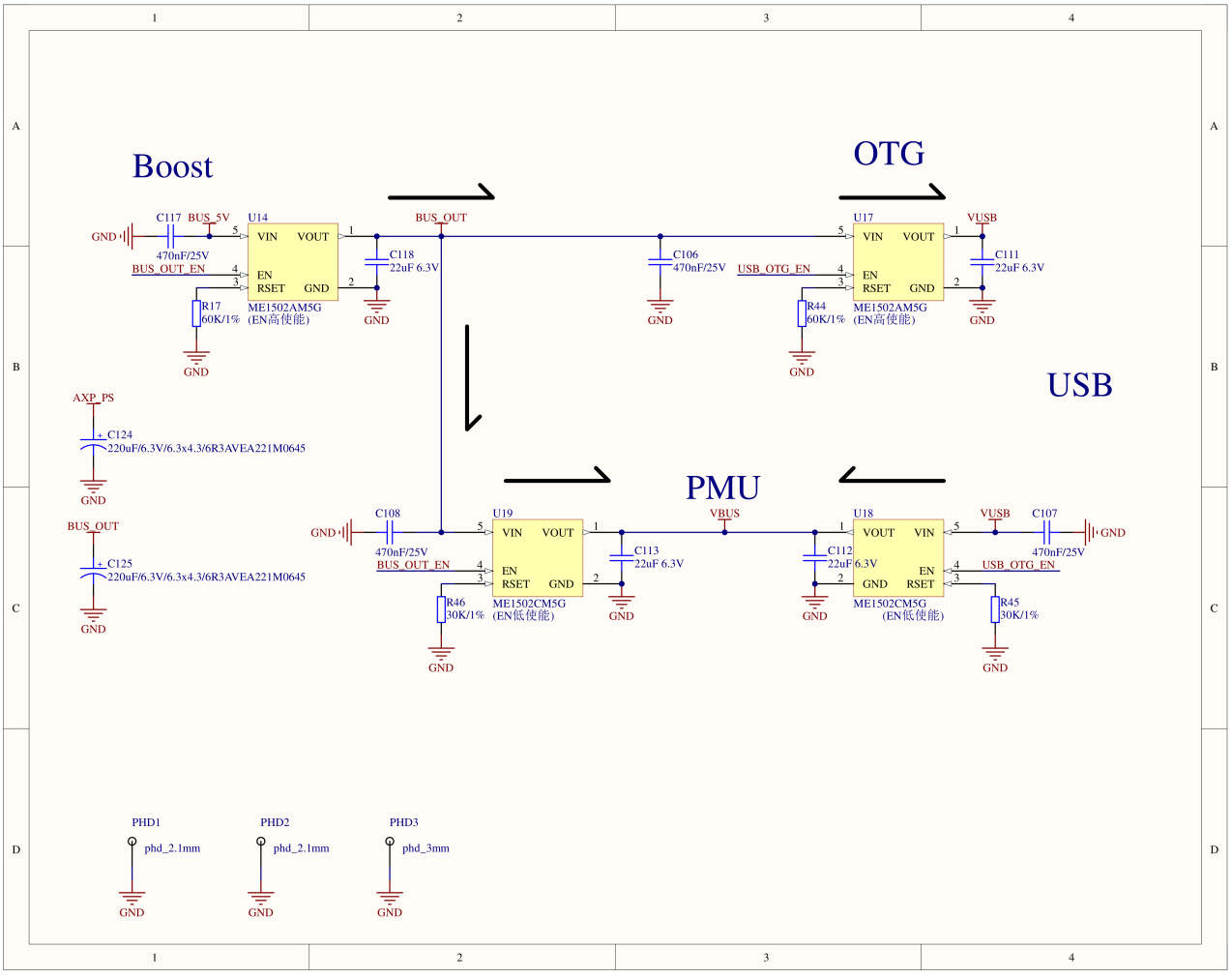
Boost
OTG
USB
PMU
U14
ME1502AM5G
(EN高使能)
U17
ME1502AM5G
(EN高使能)
U19
ME1502CM5G
(EN低使能)
U18
ME1502CM5G
(EN低使能)
PHD1
PHD2
PHD3

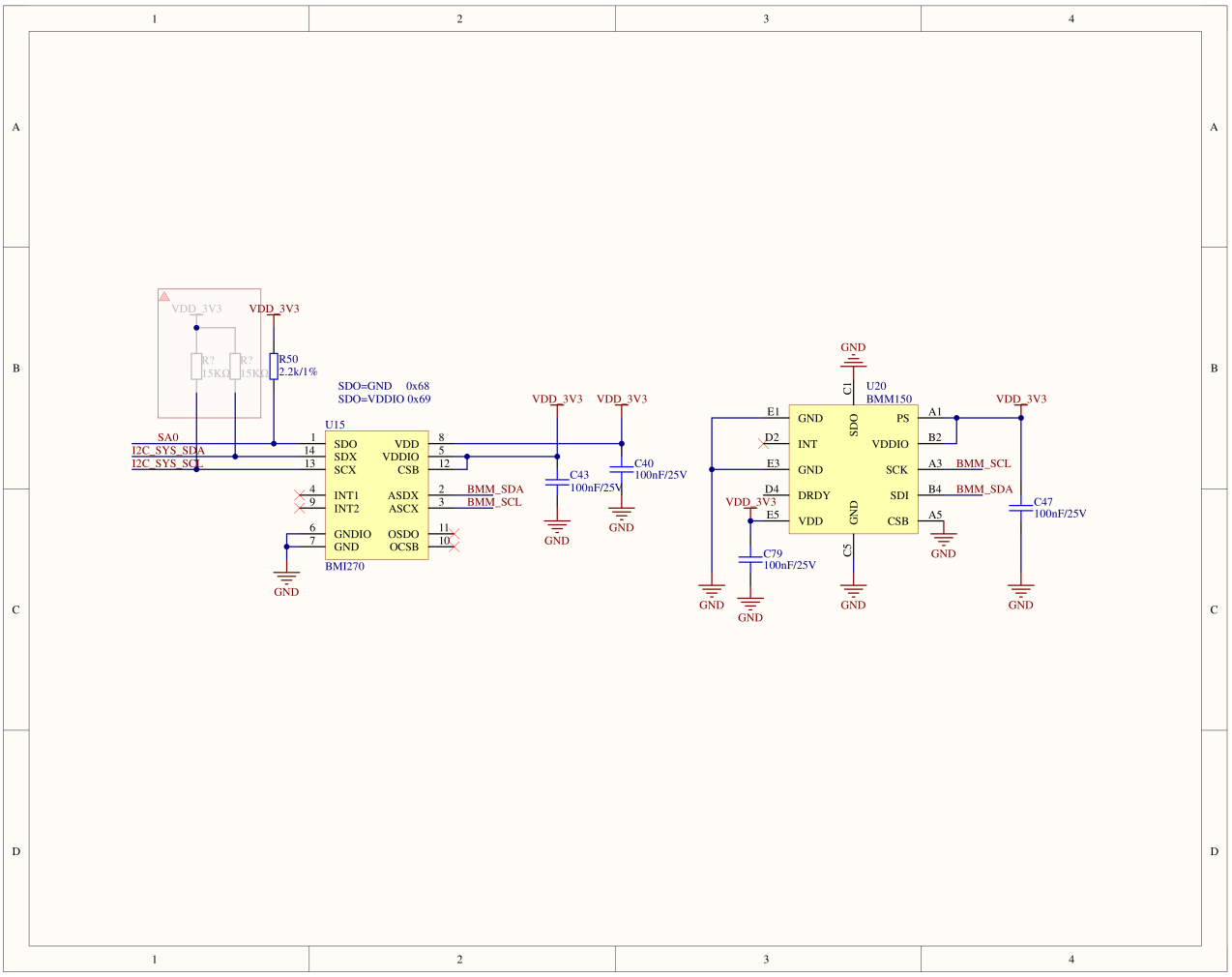
VDD_3V3
R50
2.2k/1%
SDO=GND 0x68
SDO=VDDIO 0x69
U15
SA0
I2C_SYS_SDA
I2C_SYS_SCL
SDO
SDX
SCX
INT1
INT2
GNDIO
GND
VDD
VDDIO
CSB
ASDX
ASCX
OSDO
OCSB
BMM_SDA
BMM_SCL
BMI270
C43
100nF/25V
C40
100nF/25V
U20
BMM150
PS
INT
DRDY
SDI
SCK
VDDIO
C79
C47
C1
C5

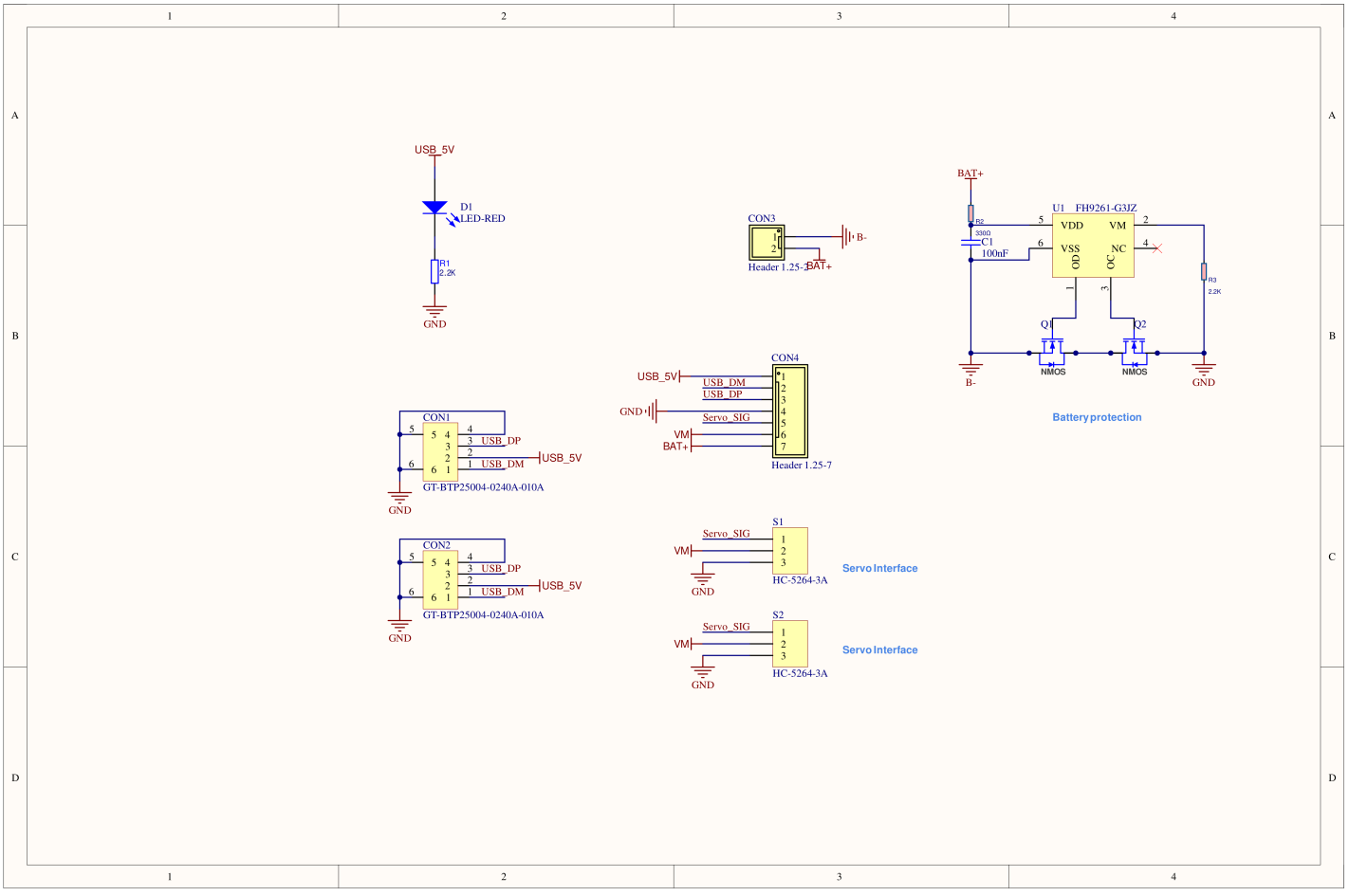
USB_5V
D1
LED-RED
R1
2.2K
GND
CON3
Header 1.25-2
B-
BAT+
U1 FH9261-G3JZ
VDD
VM
VSS
OD
OC
NC
C1
100nF
R2
R3
Q1
Q2
NMOS
Battery protection
CON1
CON2
GT-BTP25004-0240A-010A
USB_DP
USB_DM
CON4
Header 1.25-7
Servo_SIG
S1
S2
HC-5264-3A
Servo Interface

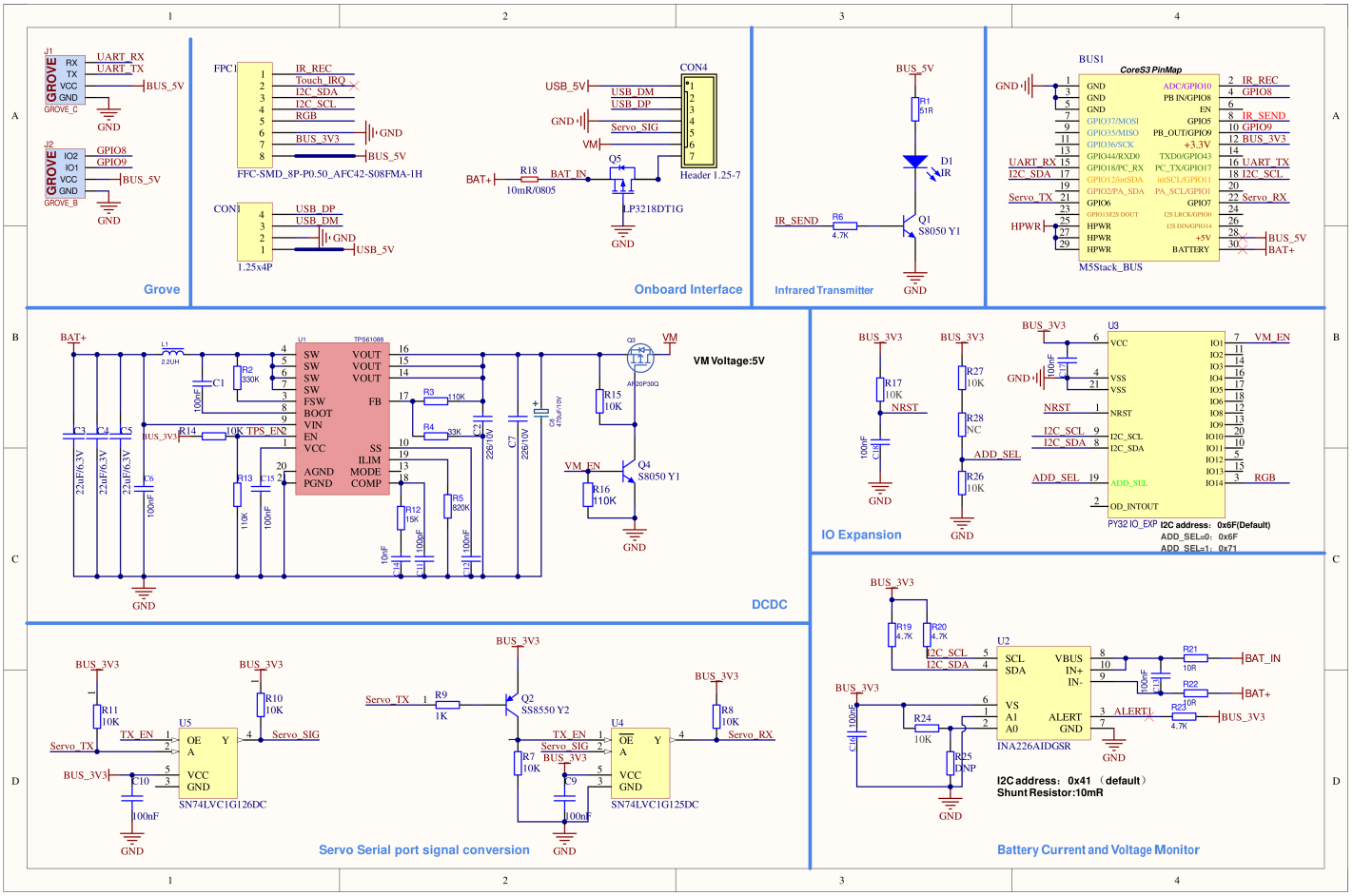
Grove
Onboard Interface
Infrared Transmitter
M5Stack_BUS
DCDC
VM Voltage:5V
IO Expansion
PY32 IO_EXP
I2C address: 0x6F(Default)
ADD_SEL=0: 0x6F
ADD_SEL=1: 0x71
Servo Serial port signal conversion
Battery Current and Voltage Monitor
I2C address: 0x41 (default)
Shunt Resistor:10mR

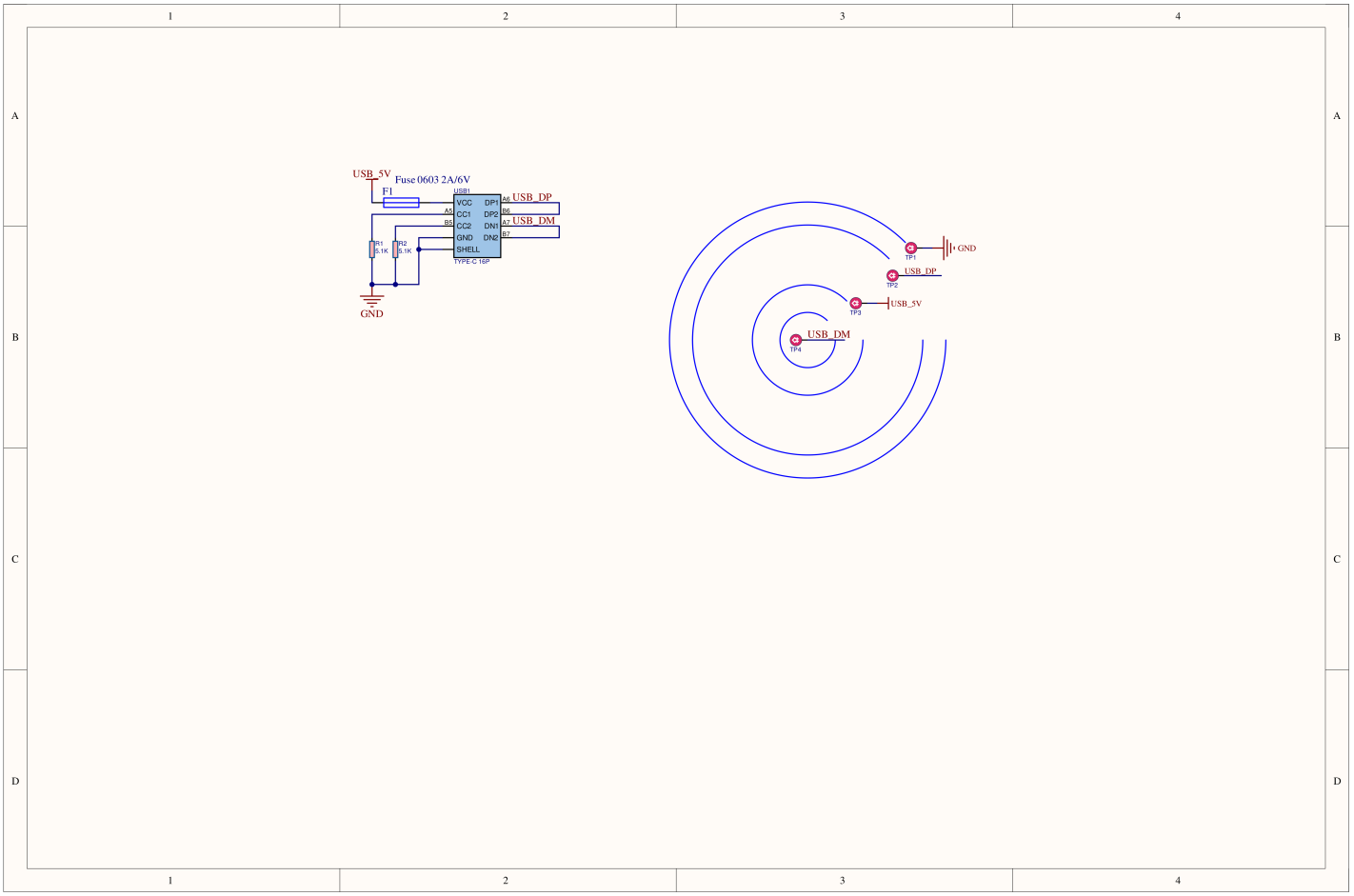
Fuse 0603 2A/6V
TYPE-C 16P

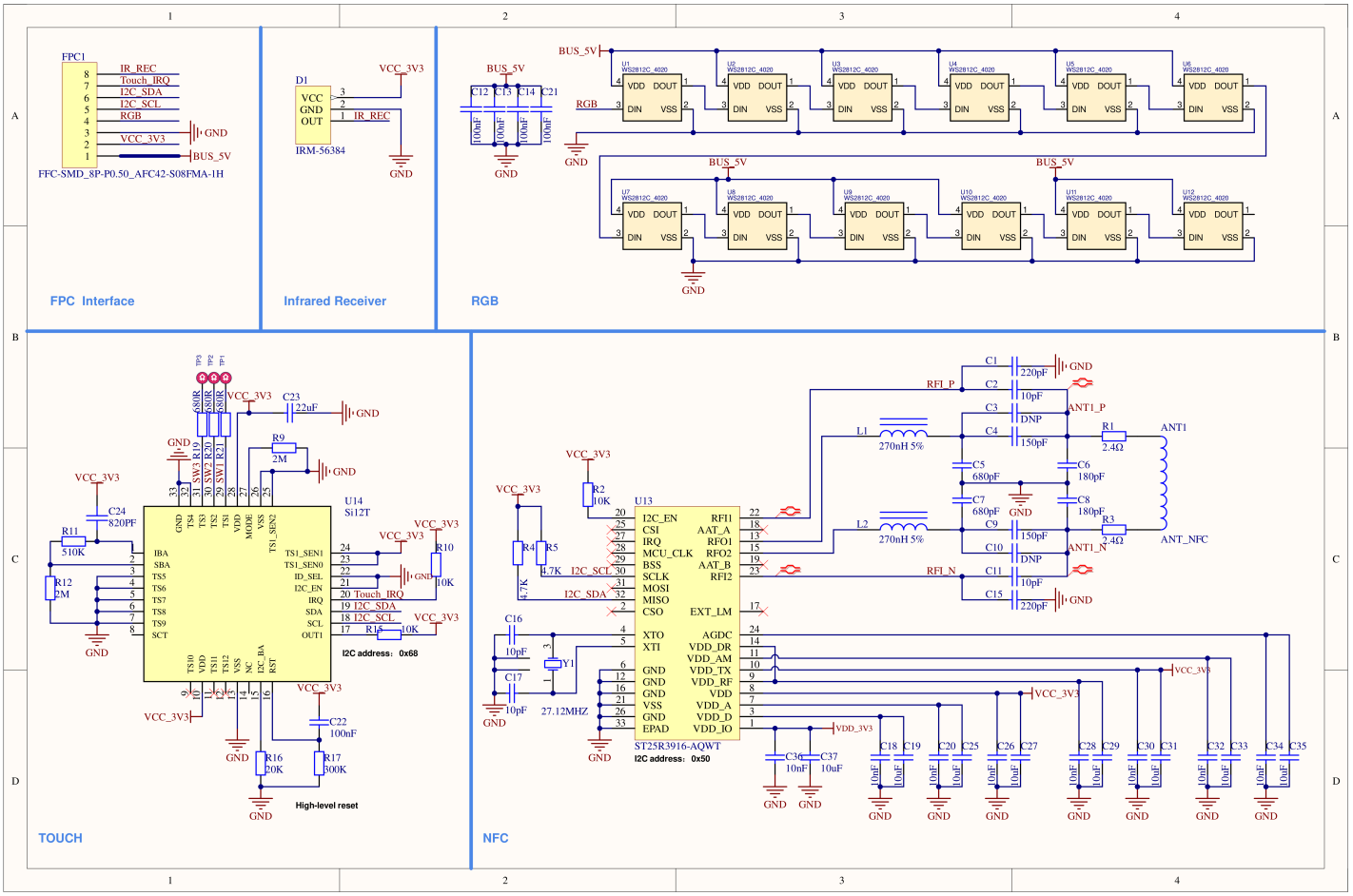

PinMap

This section mainly describes the robot body module. For information about the main controller, please refer to CoreS3 PinMap.

ESP32-S3	G6	G7	G5	G10	G11	G12
	Servo_TX	Servo_RX	IR_SEND	IR_REC	I2C_SCL	I2C_SDA

IO Expander Chip

PY32L020	IO1	IO14
	VM_EN	RGB

I2C address: 0x6F (ADD_SEL low level, default)
I2C address: 0x71 (ADD_SEL high level)

I2C Devices

Component	I2C Address
Battery Monitor (INA226AIDGSR)	0x41
NFC (ST25R3916-AQWT)	0x50
Touch (Si12T, TSM12 compatible)	0x68
IO Expander (PY32L020)	Default 0x6F Configurable to 0x71

Expand Interface

HY2.0-4P	Black	Red	Yellow	White
PORT.A	GND	5V	G2	G1
PORT.B	GND	5V	G9	G8
PORT.C	GND	5V	G17	G18

Model Size

- StackChan Whole Device Model Size PDF
- StackChan Remote Controller Model Size PDF

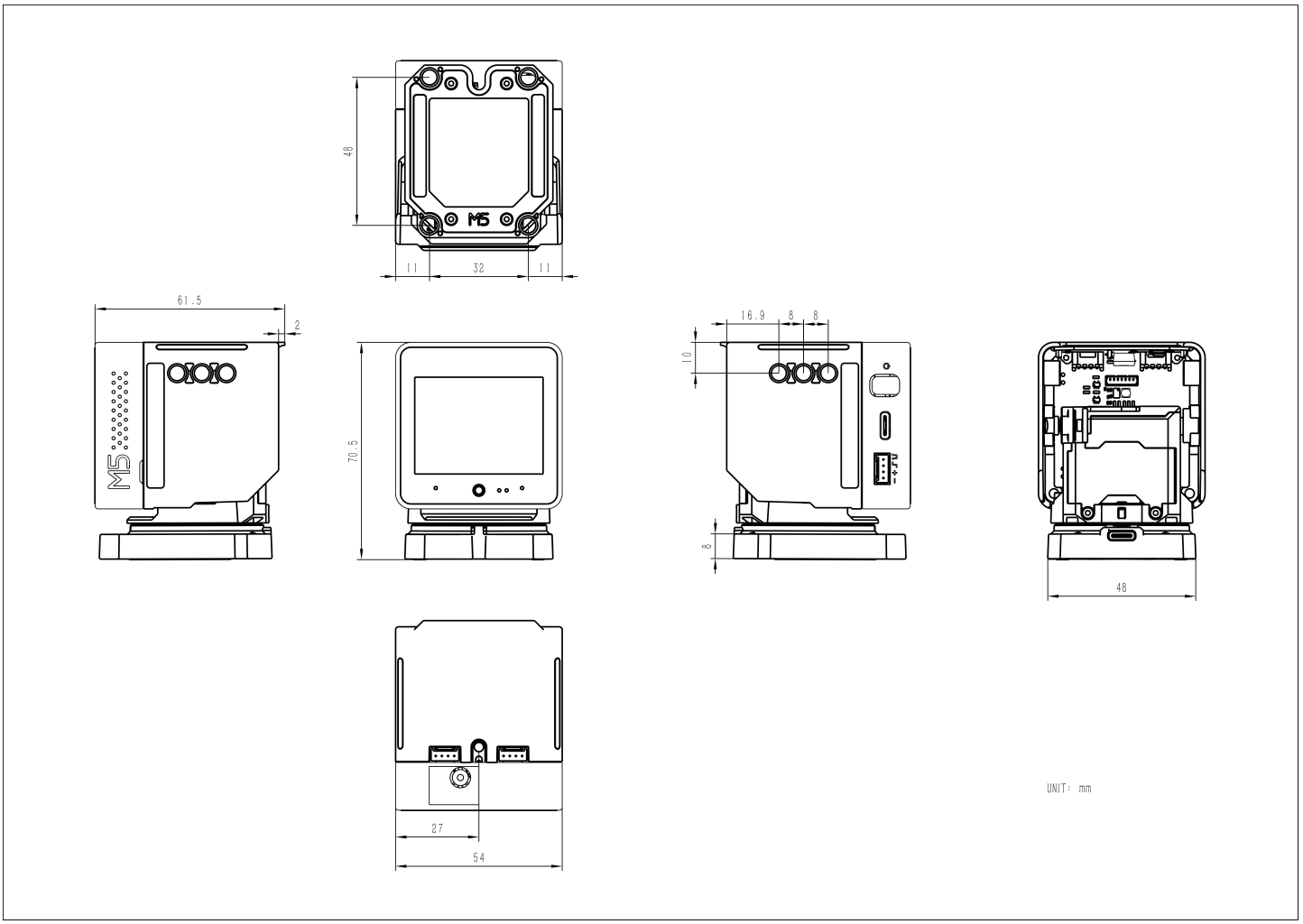

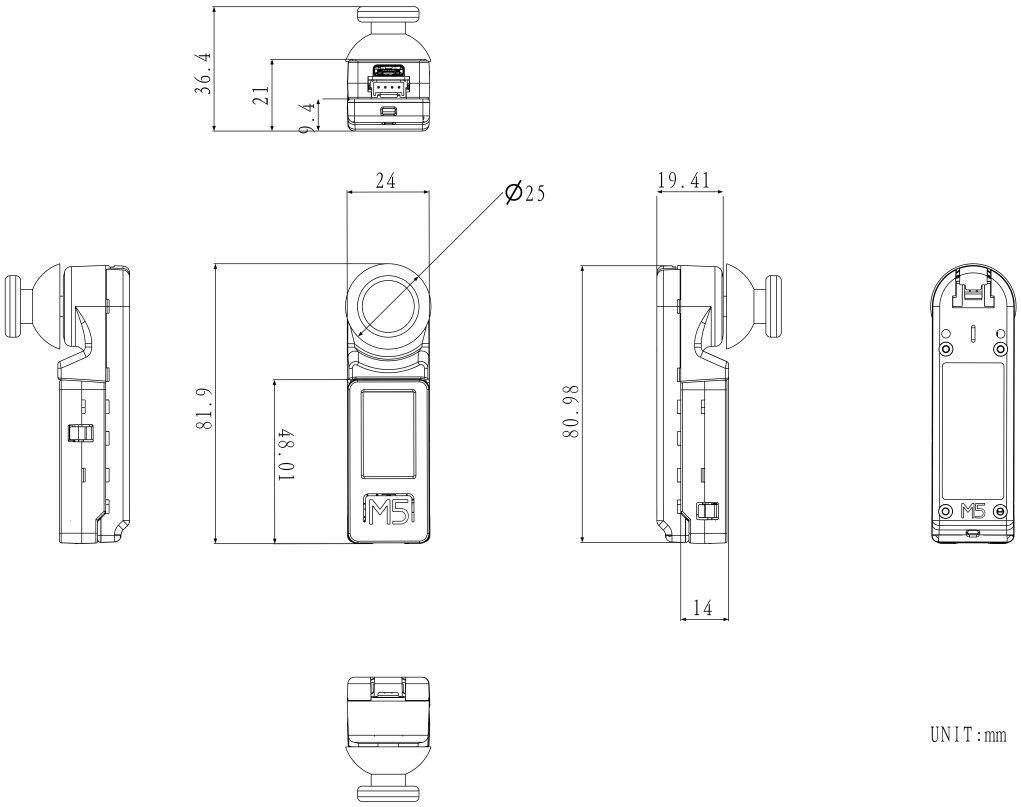

Structure

- StackChan Structure Files
- StackChan Accessories - MakerWorld

Datasheets

- Host Module (CoreS3)
  - Main Controller ESP32-S3
  - Camera GC0308
  - Proximity and Ambient Light Sensor LTR-553ALS-WA
  - Accelerometer + Gyroscope BMI270
  - Geomagnetic Sensor BMM150
  - I2S Audio Amplifier AW88298
  - Audio Codec ES7210
  - Power Management AXP2101
  - RTC BM8563
  - IO Expander AW9523B
  - ILI9342E
- Body Module
  - Servo Motor SCS0009
  - NFC ST25R3916
  - Touch Controller Si12T
  - Infrared Receiver IRM56384
  - Battery Monitor INA226
  - IO Expander PY32L020

Softwares

Factory Firmware Open Source Repository

- StackChan - GitHub, including the source code for the device firmware, remote controller firmware, mobile app, and server

Arduino

- StackChan Arduino Quick Start
- StackChan BSP Driver Library

UiFlow2

- StackChan UiFlow2 Quick Start
- StackChan UiFlow2 Docs

Factory Firmware

Mobile App Binding and Setup

To bind and configure the AI Agent and use features such as remote video, StackChan needs to be used with the StackChan World mobile app, which supports iOS and Android. Download links:

- iOS - App Store
- Android - Play Store
- Android - APK package

After downloading and installing the app, launch it, then log in or register for an M5Stack account (the same account used for UiFlow, M5Burner and the M5Stack Forum).

Power on StackChan by connecting it to a power source via the bottom USB-C port, or by short-pressing the power button on the left side. The screen will display the welcome page. Tap Start, place the device on a firm and stable surface without touching it, and tap Start again to begin the servo test. StackChan will move left, right, and up in sequence, and finally return to the initial position — screen perpendicular to the base and centered between the two “feet”.

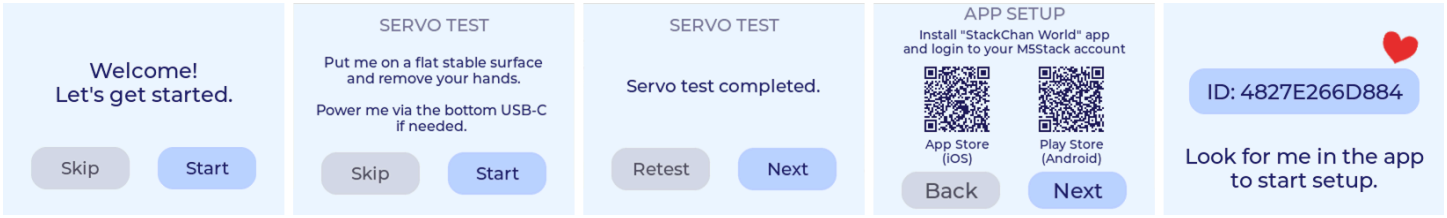

After the servo test is completed, tap Next - Next, then open the app on your phone. Tap Add a new StackChan in the app. The phone will scan for nearby StackChan devices broadcasting Bluetooth pairing requests and display them in a list. Select the device with the same ID (the MAC address of the main controller) as shown on the StackChan screen, and follow the app instructions to configure the following items:

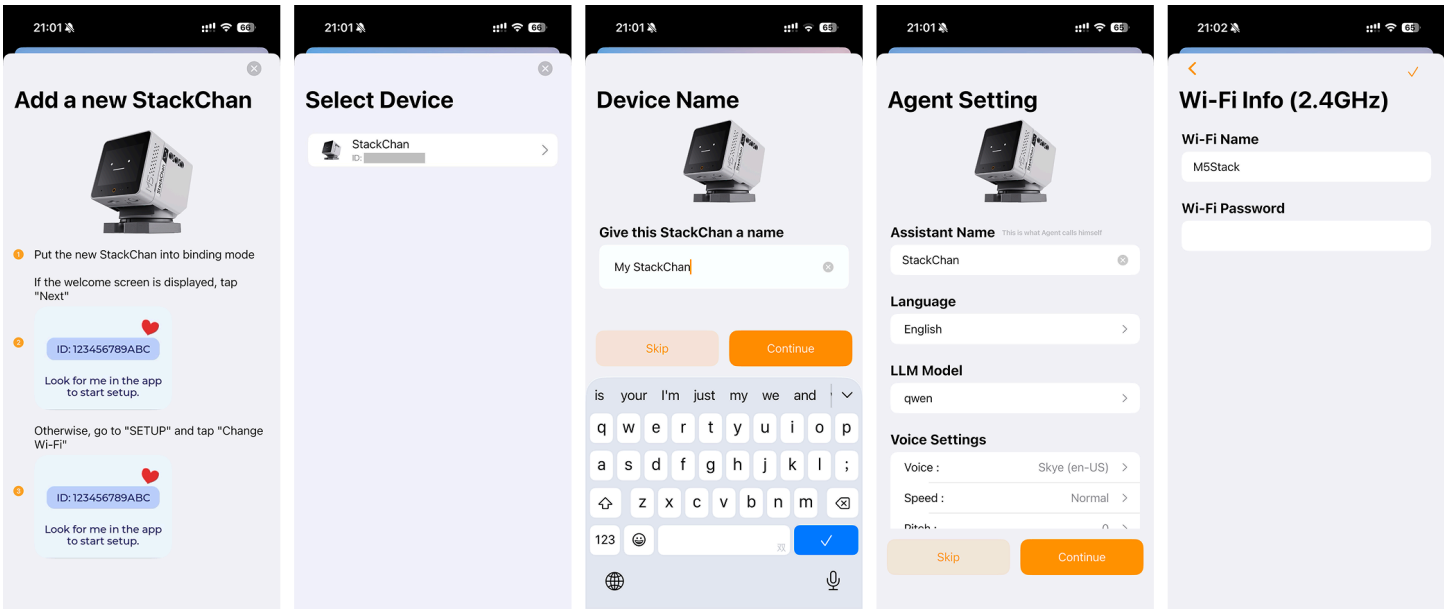

- Device name (used to distinguish multiple devices bound to the same account)
- AI Agent
  - Name (the name the AI Agent uses to refer to itself, not the wake word **Hi, StackChan**; custom wake word support is not yet available)
  - Conversation language
  - AI model
  - Voice, speech rate, and pitch
  - User speech recognition speed
  - Personality
  - Memory
- Wi-Fi name and password to connect to (supports 2.4 GHz, does not support 5 GHz; after authorization, the name of the Wi-Fi currently connected on the phone can be filled in automatically)

After completing the above settings, StackChan will restart, and the binding and setup will be completed.

> **Note**
>
> After binding, if you modify the AI Agent settings in the app, you need to restart StackChan for the changes to take effect.

UI Navigation

After powering on, the main menu is displayed on screen. Swipe left or right to switch between different function icons, then tap to enter.

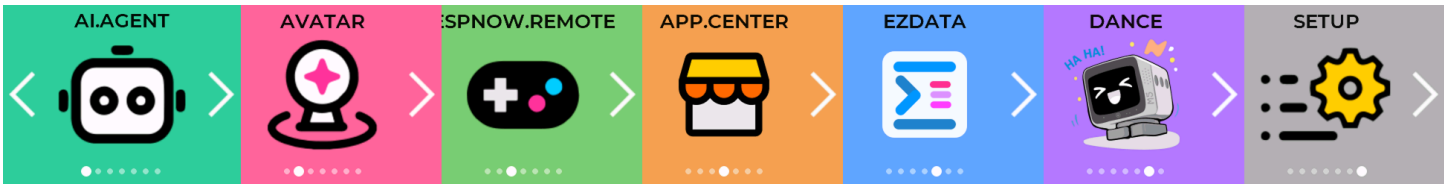



Within each function, swipe inward from the top or bottom edge of the screen to reveal the status bar (network, time, battery) or the Home button to return to the main menu, respectively.

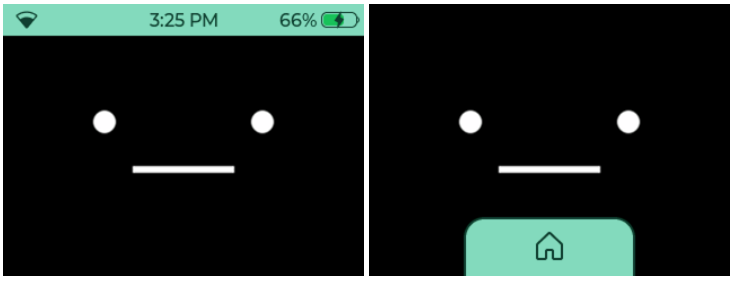



AI Agent

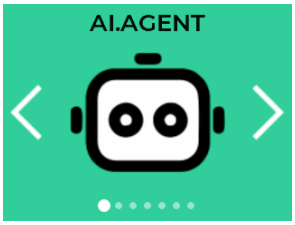

Each time you enter this function, the device checks for firmware updates online, then automatically downloads, installs, and restarts. The default voice wake word is **Hi, StackChan** (custom wake word support is not yet available). You can also tap the screen to wake it up and start a conversation.

The RGB LED located at the upper-left side of the device near the screen indicates the voice interaction status:

- **Green** indicates the device is listening;

- **Blue** indicates the device is speaking;
- **Off** indicates the voice interaction is idle.

Common voice commands:

- General Q&A
  - What time is it now?
  - What will the weather be like in New York tomorrow?
  - Tell me a joke.
  - Introduce Isaac Newton.
  - Remind me to drink water in ten minutes.
- Controlling the device's own components
  - (Speaker) Set the volume to 80%.
  - (Motor) Turn your head to the left.
  - (RGB LED) Change your built-in light to blue.
  - (Camera) What can you see right now?
  - (Battery) How much battery power is left?
- After connecting to Home Assistant MCP (See the connection instructions below)
  - Turn on the bedroom light.
  - Turn on the air conditioner and set it to 25 degrees.
  - What is the current temperature in the living room?

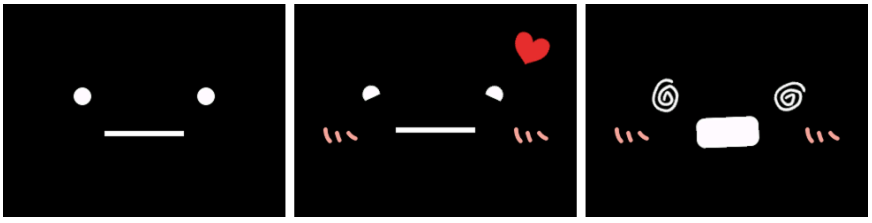

In AI Agent mode, when the device is idle, it will randomly perform expressions such as blinking and head movements. Swipe vertically on the touch area on the top of the device to trigger a happy 🥰 expression and motion; shake the device to trigger a dizzy 😵 expression; after a period of inactivity with no interaction, a sleeping 😴 expression will be triggered.

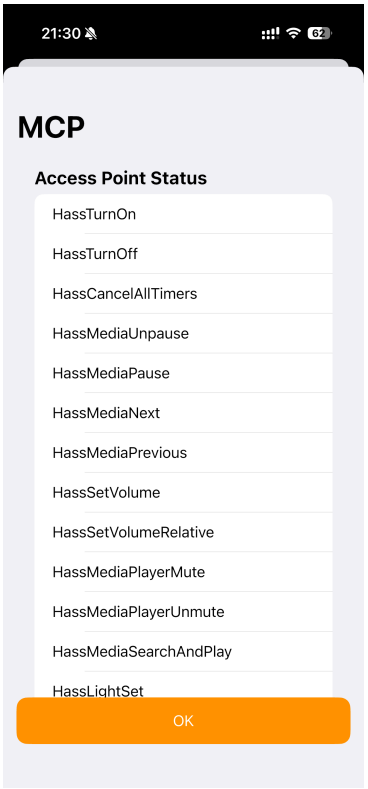

After connecting to MCP via the Home Assistant plugin, the AI Agent can control Home Assistant devices by voice. For now, you can refer to the guide at https://github.com/c1pher-cn/ha-mcp-for-xiaozhi/blob/main/README.en.md . A detailed tutorial is in preparation.

Avatar Mobile Communication

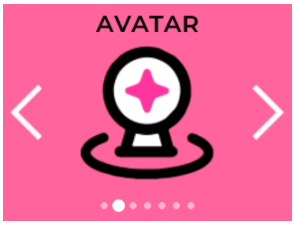

The Avatar feature on StackChan corresponds to the Avatar, Monitoring Camera, Motion, and Dance (Wi-Fi mode) features in the mobile app. When using or switching between these features on the mobile side, keep StackChan in Avatar mode; no additional operation is required.

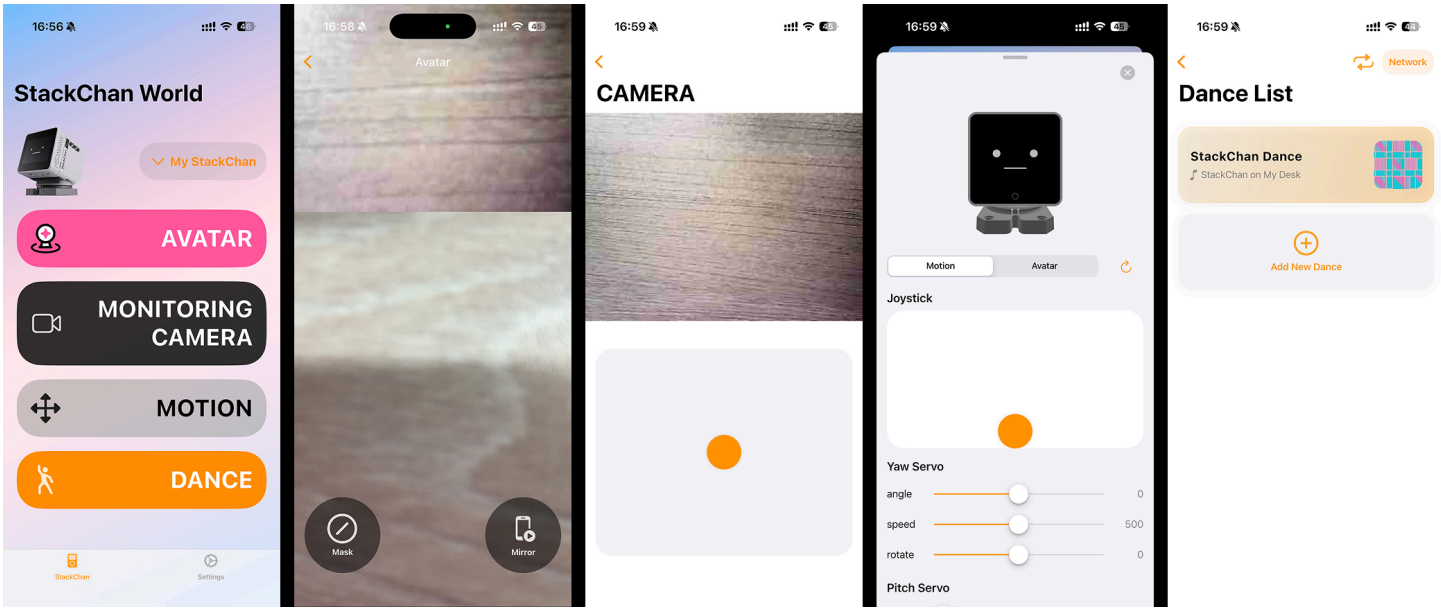

- When you enter the Avatar feature on the mobile app, StackChan becomes your avatar and mimics the person in front of the phone, including head movements (up, down, left, right) and the position and size of the eyes and mouth. Voice call functionality is not available yet.
- When you enter the Monitoring Camera feature on the mobile app, StackChan acts as a monitoring camera. You can use the on-screen joystick to move it to different angles.
- When you enter the Motion feature on the mobile app, you can control head movement and on-screen expressions. The rotate option enables continuous horizontal rotation.
- When you enter the Dance feature on the mobile app, select Network (Wi-Fi mode) in the top-right corner. You can set music, movements (rotation angles), and lighting colors to choreograph StackChan's dance.

ESP-NOW Remote Control



This feature enables remote control via the ESP-NOW wireless transmission protocol based on Wi-Fi. StackChan acts as the receiver, while a remote controller or another StackChan acts as the sender.

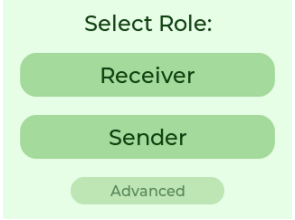

After entering the remote control feature, StackChan can quickly select Receiver or Sender to enter the default control mode, or tap Advanced to customize the Wi-Fi Channel and Receiver ID. When StackChan is used as the sender, **manually rotating its head** will cause the receiver to rotate to the same angle.

The remote controller consists of the StickC-Plus controller and the Hat Mini JoyC joystick. Press and hold the left power button for 2 seconds to power on, and for 6 seconds to power off, consistent with the controller behavior. After powering on, short press the small right-side button (BtnB) to switch between Wi-Fi Channel and Receiver ID selection, and move the joystick up or down to increase or decrease the value. Short press the large front button (BtnA) to enter joystick control mode; press again to switch to IMU attitude control mode; press once more to return to Wi-Fi Channel and Receiver ID settings.

Wi-Fi Channel and Receiver ID rules: only devices on the same Wi-Fi Channel can communicate; devices on different channels cannot communicate. The receiver sets its own ID, while the sender sets the target receiver ID. When the target ID is 0, it acts as a broadcast, and all receivers (regardless of ID) will be controlled (receiver ID cannot be set to 0). When the target ID is not 0, only the receiver with the matching ID will be controlled. Multiple receivers can share the same ID to enable group control.

App Center

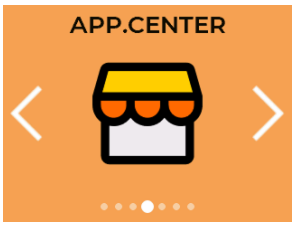

This feature allows you to download various applications online, such as a pipe-jumping mini game, IMU stabilizer, and universal IR learning remote. More applications will be added over time.

EZData

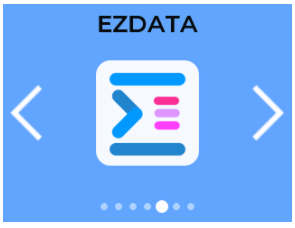

This feature is not available yet.

Dance

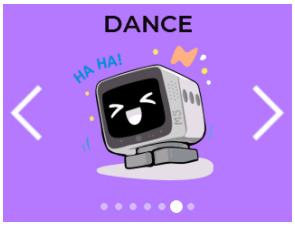

This feature corresponds to the Dance function in the mobile app under Bluetooth mode. You can set music, movements (rotation angles), and lighting colors to choreograph StackChan's dance.

Setup

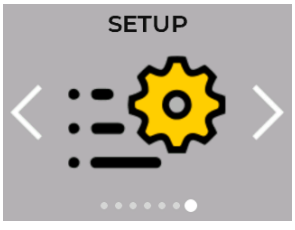

This section contains various on-device settings for StackChan, including Wi-Fi network, screen brightness, speaker volume, time zone, servo calibration, RGB strip test, account unbinding, firmware update, and more.



Servo calibration: In some cases, abnormal servo behavior can be corrected using this feature. After entering the calibration screen, gently rotate the device manually to the initial position, with the screen perpendicular to the base and centered between the two “feet”. Then tap **Set Current Position As Home**. Next, verify whether the calibration is effective: gently rotate the device away from the initial position, then tap **Move To Home**. If the device returns to the initial position, the calibration is successful. Tap **Done** at the bottom to complete the process.

Motor Safety

If you feel resistance when rotating manually, it means the motor is powered and under control. Forcing rotation may cause hardware damage.

Firmware update: Similar to entering the AI Agent, the device will check for firmware updates online, automatically download and install them, and then restart.

Mobile App Settings

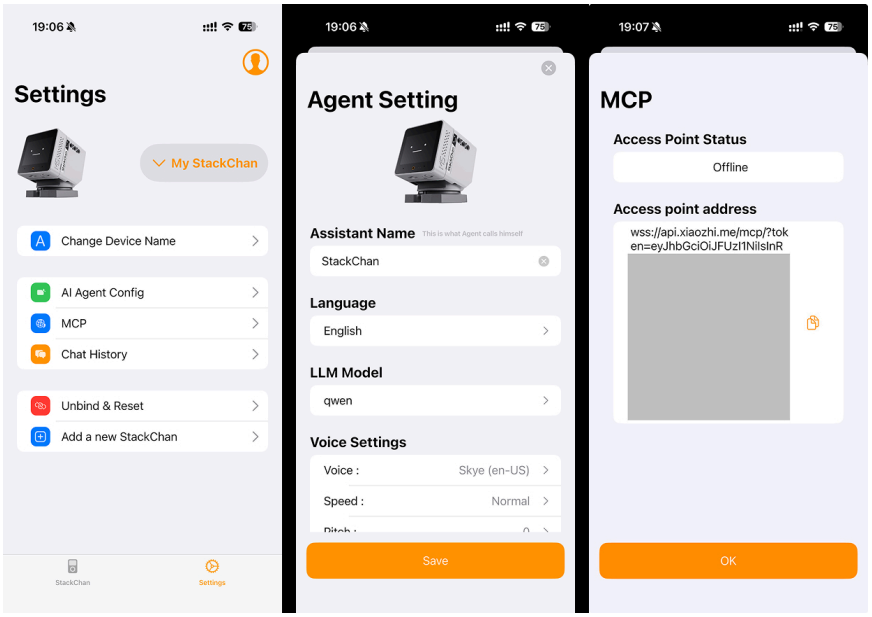

Settings in the mobile app include multi-device management, device name, AI Agent profile, MCP, conversation history, device unbinding, and more. Unbinding from the StackChan device or from the mobile app has the same effect: it clears AI Agent settings, deletes conversation history, disconnects the mobile app, and allows the device to be rebound to another M5Stack account after restart.

Restore Factory Firmware

If you have flashed custom firmware to StackChan using Arduino, UiFlow, or other methods, or need to restore the factory firmware due to unexpected issues, you can use the M5Stack unified flashing tool, M5Burner, on your computer:

- Windows https://m5burner-cdn.m5stack.com/app/M5Burner-v3-beta-win-x64.zip
- macOS https://m5burner-cdn.m5stack.com/app/M5Burner-v3-mac-x64.dmg
- Linux https://m5burner-cdn.m5stack.com/app/M5Burner-v3-beta-linux-x64.zip

Open M5Burner, search for StackChan, check **Only Official**, and click **Download** to get the latest firmware version.

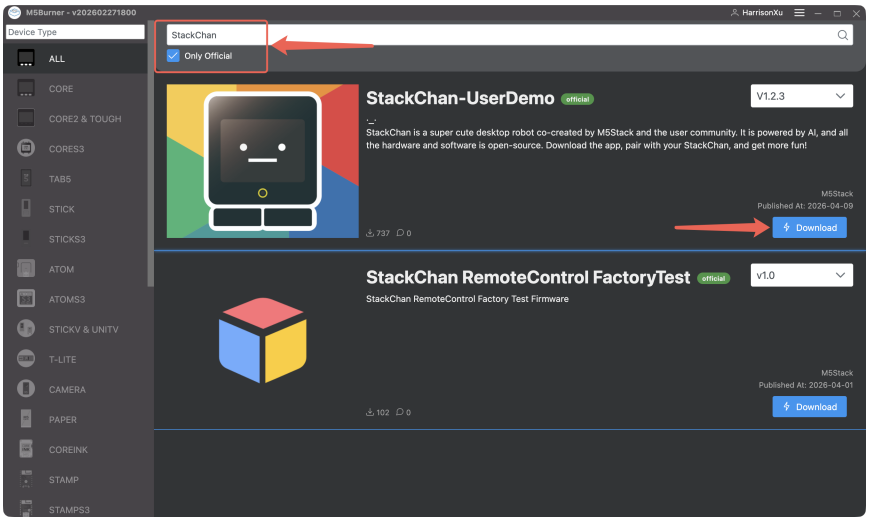

Connect the computer and StackChan using a USB-C cable. Both USB-C ports support data transfer, but it is recommended to use the one on the base to avoid accidental movement. Press the power button once to turn on the device. On macOS, if a permission prompt appears, please allow it.

In M5Burner, click **Burn**, then select the corresponding port of the device. Click **Start** and wait for the progress bar to complete the flashing process.

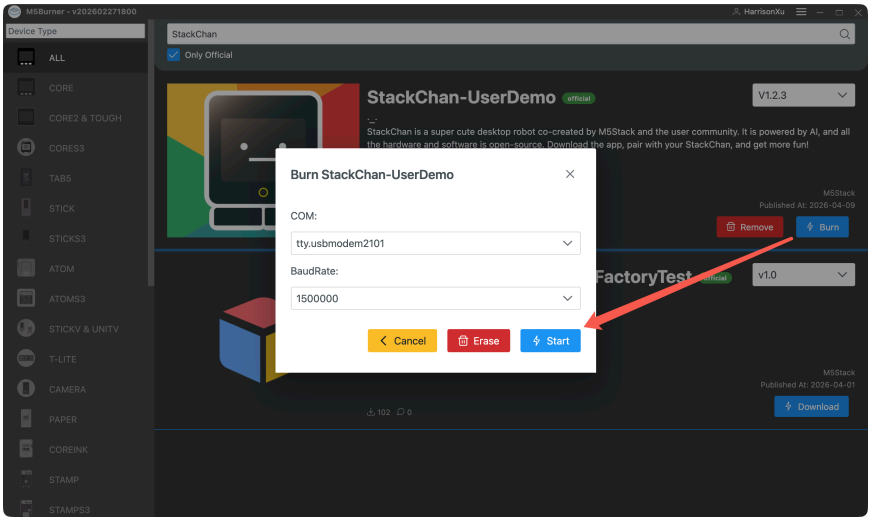

If you are not sure which port corresponds to the device, expand the port list, disconnect the device and note which port disappears, then reconnect the device. If the device port does not appear, press and hold the **RST** button for 3 seconds. The indicator next to the button will turn green, indicating that the device has entered download mode. Then release the button.

Troubleshooting

Pairing Issues

When using StackChan for the first time, you configure it through the mobile app. If the StackChan screen already displays an ID, but after tapping "Add a new StackChan" in the app you only see pairing instructions instead of a list of nearby devices available for pairing, please check whether the StackChan World app has been granted the required permissions, such as Bluetooth access. After granting the necessary permissions, retrying the pairing process will usually resolve the issue.

The Wi-Fi network StackChan is connected to must be 2.4 GHz. 5 GHz networks are not supported. Networks that require additional web-based login authentication (captive portal) are also not supported.

Poor Network Connectivity

If your StackChan is running in AI Agent mode and, after being awakened by the voice wake word "Hi, StackChan" or by tapping the screen, the green LED at the top of the device does not light up (that is, it does not start listening for your voice command), or if StackChan's speech output is intermittent or choppy, the issue is usually caused by poor network connectivity. Please switch to a different network and try again.

Voice Wake-up Abnormality

If your StackChan fails to wake up, please troubleshoot following the steps below:

1. Confirm that the device has entered AI Agent mode.
2. Move closer to StackChan, refer to the pronunciation in the demo video, and increase the volume to attempt wake-up.
3. Try tapping the screen to wake up the device. The top LED will light up green when woken up normally. Do not tap the screen continuously, as this may accidentally exit the wake-up mode.

XiaoZhi Pairing and Unpairing

The AI Agent feature in the factory firmware is powered by XiaoZhi. StackChan also supports other XiaoZhi-based firmware. The factory firmware is configured through the StackChan World app, while other firmware versions are typically configured through xiaozhi.me. These two systems are not interoperable. Therefore, before flashing and using another XiaoZhi-based firmware, you must first unpair StackChan (either through the StackChan World app or through the Settings menu in the factory firmware; both methods have the same effect). Otherwise, you may encounter pairing issues when attempting to pair the device on xiaozhi.me. The reverse is also true. If the device has already been paired on xiaozhi.me, it must be unpaired before it can be paired in the StackChan World app and used with the factory firmware.

Hardware Issues

If your StackChan appears to have a hardware-related issue, such as failing to power on, abnormal servo movement, display abnormalities, or the green LED lighting up after wake-up in AI Agent mode but the device not responding to voice commands, please perform the following tests as appropriate:

- In the Settings menu on the StackChan device, run the Microphone Test, RGB LED Test, and Servo Test. Check whether the microphone responds to sound, whether the RGB LED displays the correct colors, and whether the servo can move from its current position back to the home position after tapping "Move To Home".
- Use M5Burner to flash the latest version of CoreS3 UserDemo, then run the built-in tests for CoreS3 hardware functions, such as checking battery voltage, USB voltage, and other information in the Power Test section.

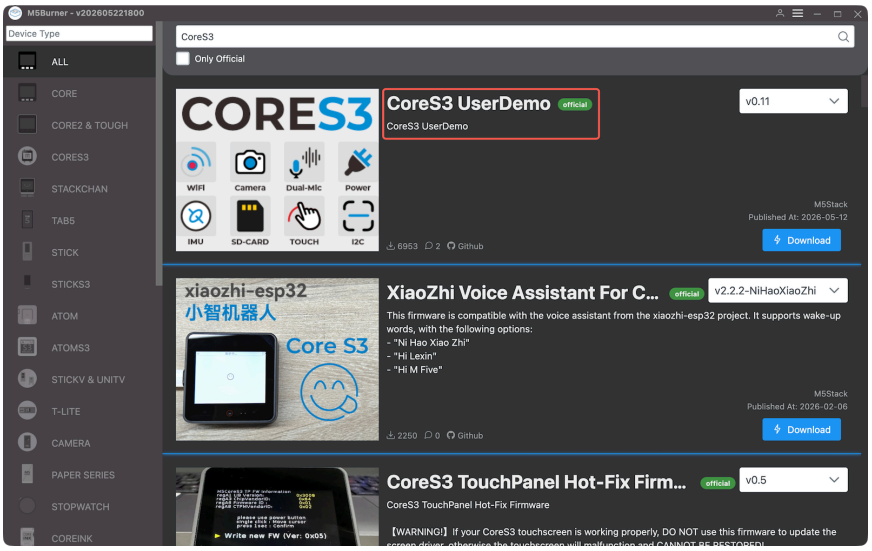

- If StackChan cannot power on, try supplying power through each of the two USB-C ports separately. If you are comfortable with hardware disassembly, you may also follow the instructional video to separate the CoreS3 controller from the body and test the controller independently.

After completing the relevant tests, please send the test procedure, photos, and videos to official customer support for further assistance.

Video

Version Change

Release Date	Product Change	Note
2026.8.7	LCD driver changed from ILI9342C to ILI9342E	M5GFX library version >= 0.2.27 is required