Hahn Part Number: 28-02LBA
G 14 40 0350 1 0854 AU27 AU27 02500N /4/5/Si

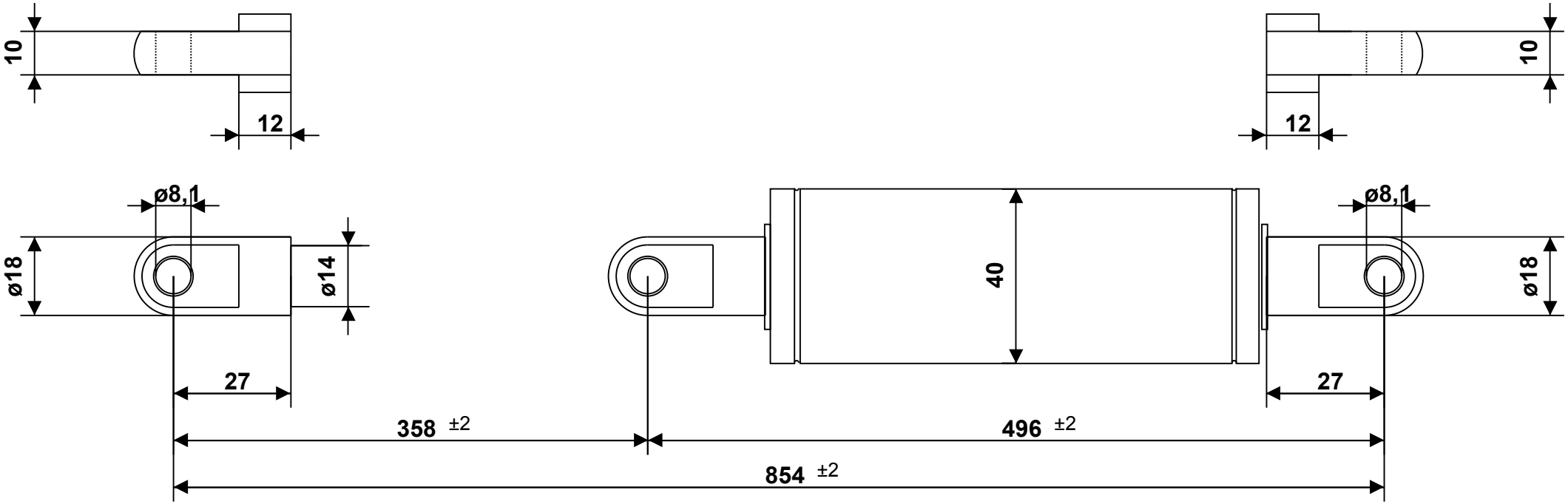

Intended for internal use and customer / Tolerance of ext. length: +/- 2mm - Dimensions without tolerance: per DIN ISO 2768-1 -c (ISO 2768 -c) - For Information Only
Force tolerance: F1 >= 1000N: +/- 5%; < 1000N: +/- 10%, min.: +/- 10N, max.: +/- 50N - Unregistered Copy, Print-out or file not subject to modification service.
End fitting orientation is random and not represented by drawing unless specified - Observe disposal instructions - Not true to scale

HAHN GASFEDERN A STABILUS COMPANY	Please note our technical instructions	Assembly/storing with piston rod down
17. Nov 2026 Auto-Printservice	No opening-no heating-high pressure	

Made in Germany	**Part**	**Dimension**	**Material / Surface**	**Fitting**	**Progr.:17,90 %**
Drawing owned by Hahn Gasfedern GmbH	Piston rod	Ø14mm	Stahl, hartverchromt	AU27 M10 Ø8.1 t=10	
info@hahn-gasfedern.de	Cylinder	Ø40mm	Stahl,schwarz	AU27 M10 Ø8.1 t=10	
www.hahn-gasfedern.de				Configuration ID : 10088773-	