780 SERIES

CleanTop® II Optical Tops

U.S. Patent No. 4,645,171

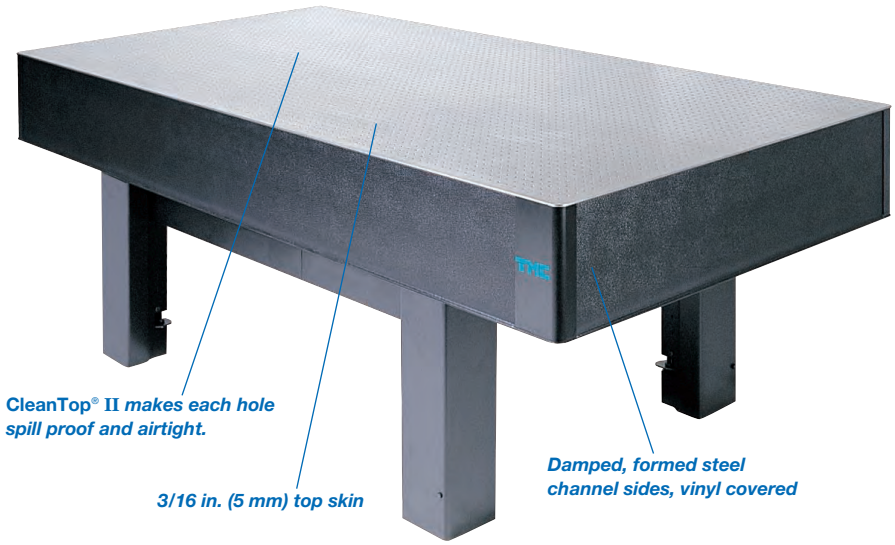

Features

- Patented CleanTop II individual nylon cups under each tapped hole are airtight.
- Three damping levels available.

GENERAL SPECIFICATIONS

Core: Steel honeycomb, closed-cell, 0.010 in. thick foil
Core shear modulus: 275,000 psi
Core cell size: <0.5 in.²
Core density: 13.3 lb/ft³ (230 kg/m³)
Flatness: ∓ 0.005 in. (0.13 mm)
Top skin: 430 series ferromagnetic stainless steel, 3/16 in. thick (5 mm)
Compliance, resonant frequency, stiffness: See charts on page 25
Sidewalls: Damped, formed steel channel, vinyl covered
Tapped holes: Backed by 1 in. (25 mm) long CleanTop II nylon cups

Our spill-proof CleanTop® II Optical Tops are the industry standard. They are available in a full range of sizes and three damping levels.

CleanTop II meets or exceeds all current industry standards for structural stiffness and damping.

The CleanTop II is recommended for the majority of optical table applications.

How to Order

1. Choose prefix from chart indicating desired damping level.
2. Choose basic part number for the required size from size chart.
3. Assign suffix indicating hole pattern required.

Model Number Example

Prefix		Basic		Suffix
784	—	455	—	02R
Series CleanTop® II maximum damping 3/16" top skin		**Size** 4' x 8' x 8"		**Hole Pattern** 1/4-20 holes on 1" centers No laser port Radius corners

Prefix Chart

Damping Level	Prefix
Maximum dry damping	784
Standard dry damping	783
Nominal dry damping	781

Suffix Chart
Hole Patterns/Laser Ports

Suffix	Hole Pattern-Threads	Double Density	Laser Port
00R	No Holes	no	no
01R	1" centers - 1/4-20	no	yes
02R	1" centers - 1/4-20	no	no
11R	25 mm centers - M6	no	yes
12R	25 mm centers - M6	no	no
01DR	1" staggered centers - 1/4-20	yes	yes
02DR	1" staggered centers - 1/4-20	yes	no
11DR	25 mm staggered centers - M6	yes	yes
12DR	25 mm staggered centers - M6	yes	no

Size Chart — Basic Part Number

Surface Dimensions			8 in. Thick Tops (200 mm)	12 in. Thick Tops (300 mm)	18 in. Thick Tops (450 mm)	24 in. Thick Tops (600 mm)
in.	ft	m				
30 x 60		0.75 x 1.5	784 – 432	784 – 632		
30 x 72		0.75 x 1.8	784 – 491	784 – 691		
30 x 96		0.75 x 2.4	784 – 492	784 – 692		
30 x 120		0.75 x 3.0	784 – 493	784 – 693		
36 x 60	3 x 5	0.9 x 1.5	784 – 436	784 – 636		
36 x 72	3 x 6	0.9 x 1.8	784 – 439	784 – 639		
36 x 96	3 x 8	0.9 x 2.4	784 – 440	784 – 640	784 – 740	784 – 840
36 x 120	3 x 10	0.9 x 3.0	784 – 494	784 – 694	784 – 794	784 – 894
40 x 60		1.0 x 1.5	784 – 443	784 – 643		
40 x 80		1.0 x 2.0	784 – 444	784 – 644	784 –744	784 – 844
40 x 120		1.0 x 3.0	784 – 445	784 – 645	784 –745	784 – 845
48 x 48	4 x 4	1.2 x 1.2	784 – 447	784 – 647		
48 x 60	4 x 5	1.2 x 1.5	784 – 449	784 – 649		
48 x 72	4 x 6	1.2 x 1.8	784 – 451	784 – 651	784 – 751	784 – 851
48 x 96	4 x 8	1.2 x 2.4	784 – 455	784 – 655	784 – 755	784 – 855
48 x 120	4 x 10	1.2 x 3.0	784 – 459	784 – 659	784 – 759	784 – 859
48 x 144	4 x 12	1.2 x 3.6	784 – 463	784 – 663	784 – 763	784 – 863
48 x 168	4 x 14	1.2 x 4.2	784 – 465	784 – 665	784 – 765	784 – 865
48 x 192	4 x 16	1.2 x 4.8	784 – 467	784 – 667	784 – 767	784 – 867
59 x 60	5 x 5	1.5 x 1.5	784 – 470	784 – 670	784 – 770	784 – 870
59 x 72	5 x 6	1.5 x 1.8	784 – 471	784 – 671	784 – 771	784 – 871
59 x 80		1.5 x 2.0	784 – 472	784 – 672	784 – 772	784 – 872
59 x 96	5 x 8	1.5 x 2.4	784 – 473	784 – 673	784 – 773	784 – 873
59 x 120	5 x 10	1.5 x 3.0	784 – 475	784 – 675	784 – 775	784 – 875
59 x 144	5 x 12	1.5 x 3.6	784 – 476	784 – 676	784 – 776	784 – 876
59 x 168	5 x 14	1.5 x 4.2	784 – 477	784 – 677	784 – 777	784 – 877
59 x 192	5 x 16	1.5 x 4.8	784 – 478	784 – 678	784 – 778	784 – 878
Weight Factor (WF) (approx.); Area x WF = Total Weight			0.225 lb/in.² (0.016 kg/cm²)	0.265 lb/in.² (0.019 kg/cm²)	0.420 lb/in.² (0.030 kg/cm²)	0.475 lb/in.² (0.033 kg/cm²)

770 SERIES

CleanTop® II Optical Tops



As an economical alternative to our industry standard 780 Series CleanTop® II Optical Tops, we offer our 770 Series CleanTop II with 1/8 in. (3 mm) top and bottom skins. The reduced skin thickness degrades the overall structural rigidity.

In addition, a 1/8 in. skin allows only 2 1/2 threads for a 1/4-20 screw, less the counter-sink.

However, the 770 Series is the ideal configuration for less demanding applications for which low cost is the primary consideration.

Features

- Patented CleanTop II individual nylon cups under each tapped hole are airtight.
- 1/8 in. skins.
- Two damping levels available.

GENERAL SPECIFICATIONS

Core: Steel honeycomb, closed-cell, 0.010 in. thick foil
Core shear modulus: 275,000 psi
Core cell size: <0.5 in.²
Core density: 13.3 lb/ft³ (230 kg/m³)
Flatness: ∓ 0.005 in. (0.13 mm)
Top skin: 430 series ferromagnetic stainless steel, 1/8 in. thick (3 mm)
Sidewalls: Damped, formed steel channel, vinyl covered
Tapped holes: Backed by 1 in. (25 mm) long CleanTop II nylon cups

How to Order

1. Choose prefix from chart indicating desired damping level.
2. Choose basic part number for the required size from size chart.
3. Assign suffix indicating hole pattern required.

Model Number Example

Prefix		Basic		Suffix
773	–	455	–	02R
Series CleanTop® II standard damping 1/8" top skin		**Size** 4' x 8' x 8"		**Hole Pattern** 1/4-20 holes on 1" centers No laser port Radius corners

Prefix Chart

Damping Level	Prefix
Maximum dry damping	—
Standard dry damping	773
Nominal dry damping	771

Suffix Chart
Hole Patterns/Laser Ports

Suffix	Hole Pattern-Threads	Double Density	Laser Port
00R	No Holes	no	no
01R	1" centers - 1/4-20	no	yes
02R	1" centers - 1/4-20	no	no
11R	25 mm centers - M6	no	yes
12R	25 mm centers - M6	no	no
01DR	1" staggered centers - 1/4-20	yes	yes
02DR	1" staggered centers - 1/4-20	yes	no
11DR	25 mm staggered centers - M6	yes	yes
12DR	25 mm staggered centers - M6	yes	no

Size Chart — Basic Part Number

Surface Dimensions			8 in. Thick Tops (200 mm)	12 in. Thick Tops (300 mm)
in.	ft	m		
30 x 60		0.75 x 1.5	773 – 432	773 – 632
30 x 72		0.75 x 1.8	773 – 491	773 – 691
30 x 96		0.75 x 2.4	773 – 492	773 – 692
30 x 120		0.75 x 3.0	773 – 493	773 – 693
36 x 60	3 x 5	0.9 x 1.5	773 – 436	773 – 636
36 x 72	3 x 6	0.9 x 1.8	773 – 439	773 – 639
36 x 96	3 x 8	0.9 x 2.4	773 – 440	773 – 640
36 x 120	3 x 10	0.9 x 3.0	773 – 494	773 – 694
40 x 60		1.0 x 1.5	773 – 443	773 – 643
40 x 80		1.0 x 2.0	773 – 444	773 – 644
40 x 120		1.0 x 3.0	773 – 445	773 – 645
48 x 48	4 x 4	1.2 x 1.2	773 – 447	773 – 647
48 x 60	4 x 5	1.2 x 1.5	773 – 449	773 – 649
48 x 72	4 x 6	1.2 x 1.8	773 – 451	773 – 651
48 x 96	4 x 8	1.2 x 2.4	773 – 455	773 – 655
48 x 120	4 x 10	1.2 x 3.0	773 – 459	773 – 659
Weight Factor (WF) (approx.); Area x WF = Total Weight			0.190 lb/in.² (0.013 kg/cm²)	0.230 lb/in.² (0.016 kg/cm²)

GMP SA Siège principale: Avenue des Baumettes 17 CH-1020 Renens +41 21 633 21 21 Fax. +41 21 633 21 29 info@gmp.ch
GMP SA Büro Zürich: Dübendorfstrasse 11a CH-8117 Fällanden +41 44 825 34 00 Fax. +41 44 825 34 01 so@gmp.ch

790 SERIES

ClassOne™ CleanTop® II Optical Tops



The ClassOne™ CleanTop® II Optical Top design is an extension of the original CleanTop, adapted for cleanrooms.

It is Class 100 cleanroom compatible with an all-stainless steel construction (stainless steel cups optional).

Features

- 3/16 in. (5 mm) thick top skin
- Two levels of fixed damping
- Individual cups under each tapped hole are airtight
- Stainless steel top, bottom, sides
- Cleanroom-compatible design and packaging

GENERAL SPECIFICATIONS

Core: Steel honeycomb, closed-cell, 0.010 in. thick foil
Core shear modulus: 275,000 psi
Core cell size: <0.5 in.^{2}
Core density: 13.3 lbs/ft^3 (230 kg/m^3)
Flatness: ∓ 0.005 in. (0.13 mm)
Top and bottom skins: 430 series ferromagnetic stainless steel
Compliance, resonant frequency, stiffness: See charts on page 25
Sidewalls: Stainless steel with damped interior surface
Tapped holes: Backed by 1 in. (25 mm) long nylon (optional stainless steel 304 alloy) cups

How to Order

1. Choose prefix from chart indicating desired damping level.
2. Choose basic part number for the required size from size chart.
3. Assign suffix indicating hole pattern required.

Model Number Example

Prefix		Basic		Suffix
794	—	455	—	02R
Series ClassOne™ CleanTop® II maximum damping 3/16" top skin		**Size** 4' x 8' x 8"		**Hole Pattern** 1/4-20 holes on 1" centers No laser port Radius corners

Prefix Chart

Damping Level	Prefix
Maximum dry damping	794
Standard dry damping	793
Maximum dry damping with stainless steel cups	794ss
Standard dry damping with stainless steel cups	793ss

Suffix Chart
Hole Patterns/Laser Ports

Suffix	Hole Pattern-Threads	Double Density	Laser Port
00R	No Holes	no	no
01R	1" centers - 1/4-20	no	yes
02R	1" centers - 1/4-20	no	no
11R	25 mm centers - M6	no	yes
12R	25 mm centers - M6	no	no
01DR	1" staggered centers - 1/4-20	yes	yes
02DR	1" staggered centers - 1/4-20	yes	no
11DR	25 mm staggered centers - M6	yes	yes
12DR	25 mm staggered centers - M6	yes	no

Size Chart — Basic Part Number

Surface Dimensions			8 in. Thick Tops (200 mm)	12 in. Thick Tops (300 mm)	18 in. Thick Tops (450 mm)	24 in. Thick Tops (600 mm)
in.	ft	m				
30 x 60		0.75 x 1.5	794 – 432	794 – 632		
30 x 72		0.75 x 1.8	794 – 491	794 – 691		
30 x 96		0.75 x 2.4	794 – 492	794 – 692		
30 x 120		0.75 x 3.0	794 – 493	794 – 693		
36 x 60	3 x 5	0.9 x 1.5	794 – 436	794 – 636		
36 x 72	3 x 6	0.9 x 1.8	794 – 439	794 – 639		
36 x 96	3 x 8	0.9 x 2.4	794 – 440	794 – 640	794 – 740	794 – 840
36 x 120	3 x 10	0.9 x 3.0	794 – 494	794 – 694	794 – 794	794 – 894
40 x 60		1.0 x 1.5	794 – 443	794 – 643		
40 x 80		1.0 x 2.0	794 – 444	794 – 644	794 – 744	794 – 844
40 x 120		1.0 x 3.0	794 – 445	794 – 645	794 – 745	794 – 845
48 x 48	4 x 4	1.2 x 1.2	794 – 447	794 – 647		
48 x 60	4 x 5	1.2 x 1.5	794 – 449	794 – 649		
48 x 72	4 x 6	1.2 x 1.8	794 – 451	794 – 651	794 – 751	794 – 851
48 x 96	4 x 8	1.2 x 2.4	794 – 455	794 – 655	794 – 755	794 – 855
48 x 120	4 x 10	1.2 x 3.0	794 – 459	794 – 659	794 – 759	794 – 859
48 x 144	4 x 12	1.2 x 3.6	794 – 463	794 – 663	794 – 763	794 – 863
48 x 168	4 x 14	1.2 x 4.2	794 – 465	794 – 665	794 – 765	794 – 865
48 x 192	4 x 16	1.2 x 4.8	794 – 467	794 – 667	794 – 767	794 – 867
59 x 60	5 x 5	1.5 x 1.5	794 – 470	794 – 670	794 – 770	794 – 870
59 x 72	5 x 6	1.5 x 1.8	794 – 471	794 – 671	794 – 771	794 – 871
59 x 80		1.5 x 2.0	794 – 472	794 – 672	794 – 772	794 – 872
59 x 96	5 x 8	1.5 x 2.4	794 – 473	794 – 673	794 – 773	794 – 873
59 x 120	5 x 10	1.5 x 3.0	794 – 475	794 – 675	794 – 775	794 – 875
59 x 144	5 x 12	1.5 x 3.6	794 – 476	794 – 676	794 – 776	794 – 876
59 x 168	5 x 14	1.5 x 4.2	794 – 477	794 – 677	794 – 777	794 – 877
59 x 192	5 x 16	1.5 x 4.8	794 – 478	794 – 678	794 – 778	794 – 878
Weight Factor (WF) (approx.); Area x WF = Total Weight			0.225 lb/in.^{2} (0.016 kg/cm^2)	0.265 lb/in.^{2} (0.019 kg/cm^2)	0.420 lb/in.^{2} (0.030 kg/cm^2)	0.475 lb/in.^{2} (0.033 kg/cm^2)

710 SERIES

Non-Magnetic CleanTop® II Optical Tops

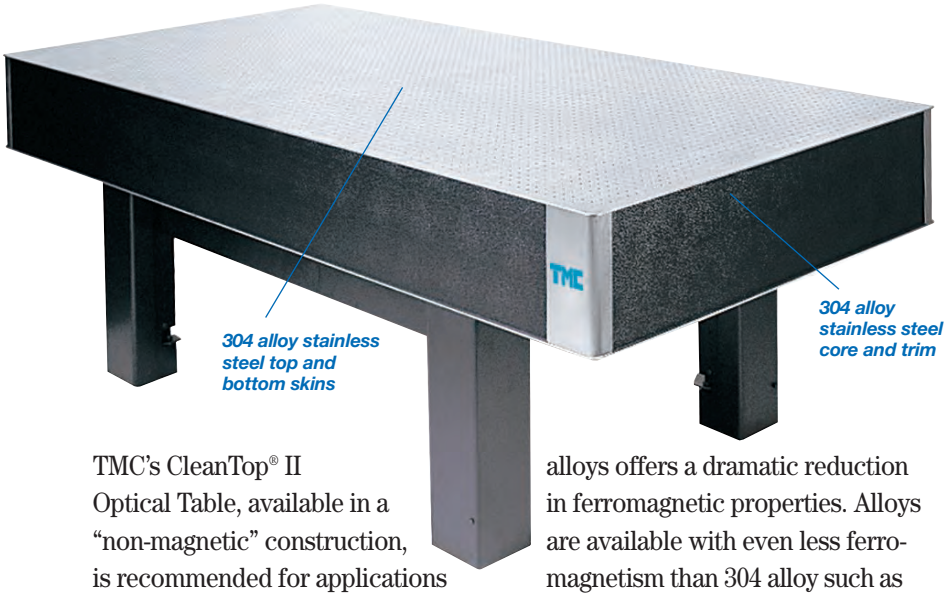

TMC's CleanTop® II Optical Table, available in a "non-magnetic" construction, is recommended for applications requiring the support of a high-strength magnet or the maintenance of a homogenous magnetic field.

Though no alloy of stainless steel can be 100% non-magnetic, the lower carbon content of the 300 series alloys offers a dramatic reduction in ferromagnetic properties. Alloys are available with even less ferro-magnetism than 304 alloy such as 316 L, but 304 is generally considered to be the best price-to-performance trade-off for a non-magnetic table. For a discussion of other alloys, contact TMC.

Features

- 100% constructed from 304 alloy stainless steel (non-magnetic).
- 0.165 in. thick top and bottom skins.
- CleanTop II patented spill-proof tapped hole design.

GENERAL SPECIFICATIONS

Core: 304 alloy stainless steel honeycomb, closed-cell, 0.010 in. thick foil
Core shear modulus: 275,000 psi
Core cell size: <0.5 in.²
Core density: 13.3 lb/ft³ (230 kg/m³)
Flatness: ∓ 0.005 in. (0.13 mm)
Skins: 304 alloy stainless steel
Compliance, resonant frequency, stiffness: See charts on page 25
Sidewalls: Vinyl covered composite side with damped interior surface
Tapped holes: Backed by 1 in. (25 mm) long nylon cups

How to Order

1. Choose prefix from chart indicating desired damping level.
2. Choose basic part number for the required size from size chart.
3. Assign suffix indicating hole pattern required.

Model Number Example

Prefix		Basic		Suffix
714	–	455	–	02R
Series Non-Magnetic CleanTop® II		**Size** 4' x 8' x 8"		**Hole Pattern** 1/4-20 holes on 1" centers No laser port Radius corners

Prefix Chart

Damping Level	Prefix
Maximum dry damping	714

Suffix Chart Hole Patterns/ Laser Ports

Suffix	Hole Pattern-Threads	Double Density	Laser Port
00R	No Holes	no	no
01R	1" centers - 1/4-20	no	yes
02R	1" centers - 1/4-20	no	no
11R	25 mm centers - M6	no	yes
12R	25 mm centers - M6	no	no
01DR	1" staggered centers - 1/4-20	yes	yes
02DR	1" staggered centers - 1/4-20	yes	no
11DR	25 mm staggered centers - M6	yes	yes
12DR	25 mm staggered centers - M6	yes	no

Size Chart — Basic Part Number

Surface Dimensions			8 in. Thick Tops (200 mm)	12 in. Thick Tops (300 mm)	18 in. Thick Tops (450 mm)	24 in. Thick Tops (600 mm)
in.	ft	m				
30 x 60		0.75 x 1.5	714 – 432	714 – 632		
30 x 72		0.75 x 1.8	714 – 491	714 – 691		
30 x 96		0.75 x 2.4	714 – 492	714 – 692		
30 x 120		0.75 x 3.0	714 – 493	714 – 693		
36 x 60	3 x 5	0.9 x 1.5	714 – 436	714 – 636		
36 x 72	3 x 6	0.9 x 1.8	714 – 439	714 – 639		
36 x 96	3 x 8	0.9 x 2.4	714 – 440	714 – 640	714 – 740	714 – 840
36 x 120	3 x 10	0.9 x 3.0	714 – 494	714 – 694	714 – 794	714 – 894
40 x 60		1.0 x 1.5	714 – 443	714 – 643		
40 x 80		1.0 x 2.0	714 – 444	714 – 644	714 – 744	714 – 844
40 x 120		1.0 x 3.0	714 – 445	714 – 645	714 – 745	714 – 845
48 x 48	4 x 4	1.2 x 1.2	714 – 447	714 – 647		
48 x 60	4 x 5	1.2 x 1.5	714 – 449	714 – 649		
48 x 72	4 x 6	1.2 x 1.8	714 – 451	714 – 651	714 – 751	714 – 851
48 x 96	4 x 8	1.2 x 2.4	714 – 455	714 – 655	714 – 755	714 – 855
48 x 120	4 x 10	1.2 x 3.0	714 – 459	714 – 659	714 – 759	714 – 859
48 x 144	4 x 12	1.2 x 3.6	714 – 463	714 – 663	714 – 763	714 – 863
48 x 168	4 x 14	1.2 x 4.2	714 – 465	714 – 665	714 – 765	714 – 865
48 x 192	4 x 16	1.2 x 4.8	714 – 467	714 – 667	714 – 767	714 – 867
59 x 60	5 x 5	1.5 x 1.5	714 – 470	714 – 670	714 – 770	714 – 870
59 x 72	5 x 6	1.5 x 1.8	714 – 471	714 – 671	714 – 771	714 – 871
59 x 80		1.5 x 2.0	714 – 472	714 – 672	714 – 772	714 – 872
59 x 96	5 x 8	1.5 x 2.4	714 – 473	714 – 673	714 – 773	714 – 873
59 x 120	5 x 10	1.5 x 3.0	714 – 475	714 – 675	714 – 775	714 – 875
59 x 144	5 x 12	1.5 x 3.6	714 – 476	714 – 676	714 – 776	714 – 876
59 x 168	5 x 14	1.5 x 4.2	714 – 477	714 – 677	714 – 777	714 – 877
59 x 192	5 x 16	1.5 x 4.8	714 – 478	714 – 678	714 – 778	714 – 878
Weight Factor (WF) (approx.); Area x WF = Total Weight			0.225 lb/in.² (0.016 kg/cm²)	0.265 lb/in.² (0.019 kg/cm²)	0.420 lb/in.² (0.030 kg/cm²)	0.475 lb/in.² (0.033 kg/cm²)

NEW From TMC!

730 SERIES

Vacuum Compatible CleanTop® Optical Tops

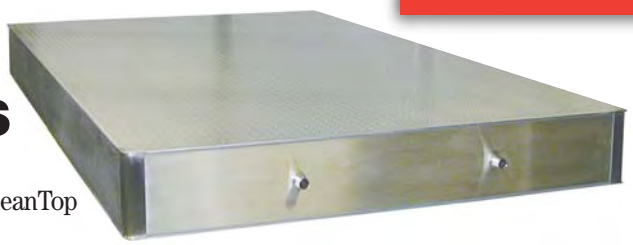

The table shown is TMC catalog number 730-455-02R. This is a 48 x 96 x 8 inch CleanTop® Optical Top adapted for vacuum chamber installation.

Historically, it has been extremely difficult if not impossible to adapt steel honeycomb optical tops to meet the rigorous requirements of vacuum chamber applications. Engineers have sacrificed the rigidity, flatness, damping, and convenience of optical tops for baked, vacuum compatible machined structures of aluminum and stainless steel. Until now.

TMC has combined our inherently clean CleanTop® design with several new proprietary design features, cleaning methods, and a vacuum pump-down procedure developed for the University of Texas' Petawatt Laser Project to achieve a level of vacuum compatibility previously unattainable. Though this new design does not require baking (and is incompatible with baking), engineers at University of Texas' Petawatt Laser have achieved 8 x 10^{-7} torr in a 7-foot diameter, 380 cubic foot chamber containing a 14-foot long CleanTop Optical Top.

Closely correlated with their vacuum compatibility is the fact that these tops only out-gas extremely small amounts ensuring they do not damage optics (because attaining the target vacuum level would be of little value if the top emitted enough contamination to damage optics). The top for the Petawatt Laser application was demonstrated to cause less than a 0.1% loss in optical transmission of a test optic.

We cannot guarantee precisely what level of vacuum you will achieve or what ratio of optical transmission you will maintain. But, we can guarantee that we will provide you with the same design features, cleaning methods, and recommended pumping procedures that assisted the University of Texas' Petawatt Laser in attaining a vacuum level of 8 x 10^{-7} torr and less than 0.1% transmission loss.

Features

- Patented CleanTop II clean optical top design
- Stainless steel honeycomb core
- Stainless steel CleanTop cups
- Vacuum compatible core geometry
- Vent fittings on table end-wall
- Special cleaning of process materials
- Cleaning and packing in accordance with strict standards of NIF Project (National Ignition Facility at Lawrence Livermore National Labs)
- Special pump-down procedure used in conjunction
- Developed in cooperation with the University of Texas Petawatt Laser Project (though not officially endorsed by U.T.)

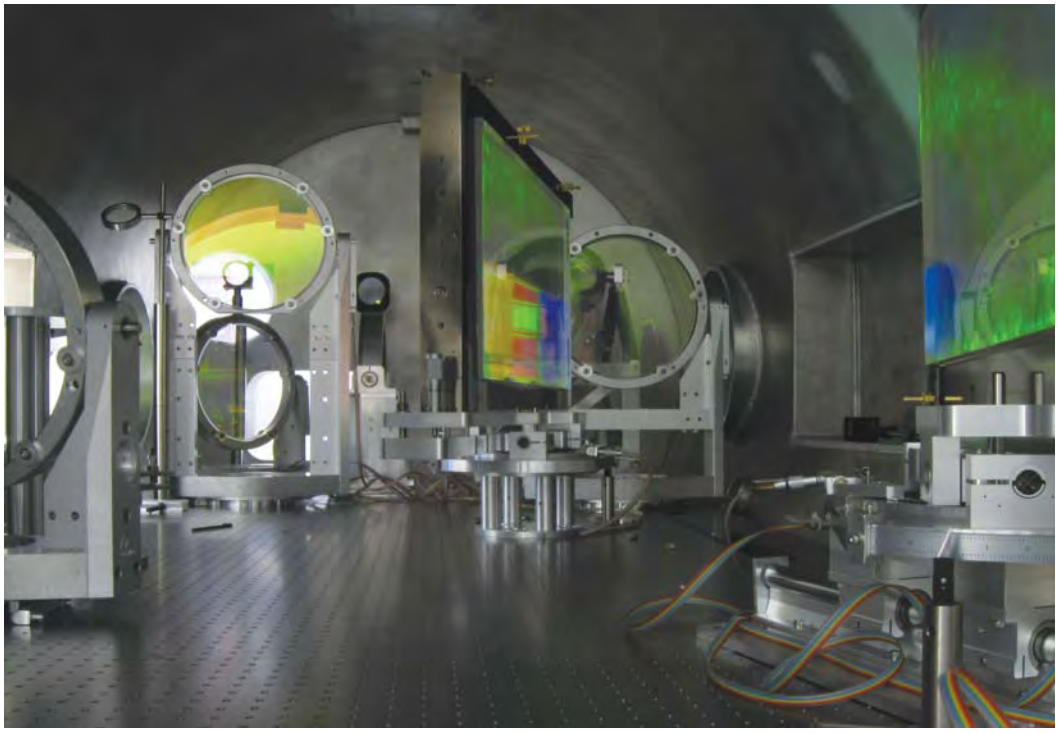

A 14-foot long TMC vacuum compatible CleanTop® Optical Top mounted in a 7-foot diameter, 380 cubic foot vacuum chamber (shown with Siskiyou large, vacuum compatible, round-optics mounts). This chamber is part of the University of Texas Petawatt Laser.

How to Order

Contact a TMC Applications Engineer for part numbers and pricing as well as vacuum pump-down procedures, details, and instructions.

www.gmp.ch

GMP SA Siège principale: Avenue des Baumettes 17 CH-1020 Renens +41 21 633 21 21 Fax. +41 21 633 21 29 info@gmp.ch
GMP SA Büro Zürich: Dübendorfstrasse 11a CH-8117 Fällanden +41 44 825 34 00 Fax. +41 44 825 34 01 so@gmp.ch

78 SERIES

CleanTop® II Breadboards

2 and 4 in. Thick (50,100 mm)

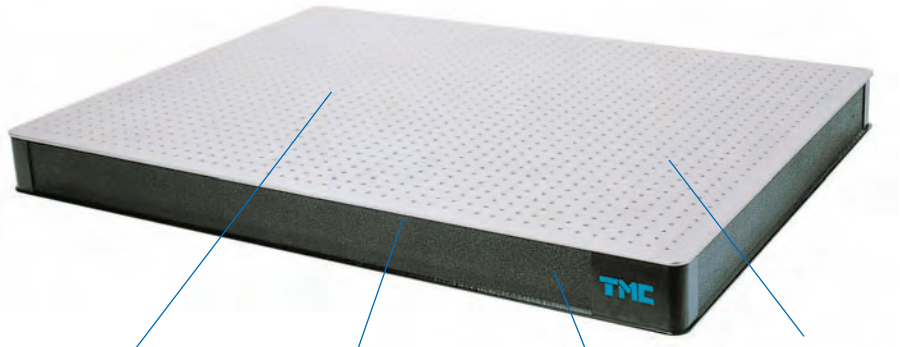

CleanTop® II spill-proof hole design

3/16 in. (5 mm) skins

One level of fixed structural damping

2 in. (50 mm) or 4 in. (100 mm) total panel thickness

GENERAL SPECIFICATIONS

Core: Steel honeycomb, closed-cell, 0.010 in. (0.2 mm) thick foil
Core shear modulus: 275,000 psi (19,300 kg/cm^2)
Core cell size: <0.5 in.^{2} (3 cm^2)
Core density: 13.3 lb/ft^3 (230 kg/m^3)
Flatness: ∓ 0.005 in. (0.13 mm)
Top skin: 430 series ferromagnetic stainless steel
Sidewalls: Damped, formed steel channel, vinyl covered
Tapped holes: Backed by 1 in. (25 mm) long CleanTop II nylon cups

TMC's 78 Series CleanTop® II Breadboards provide the ultimate in rigidity and damping for smaller tops. Available in both 2 and 4 inch thicknesses (50, 100 mm), these tops include the same patented CleanTop II spill-proof hole technology and small cell, high-density steel honeycomb core as our largest tops.

These tops can be readily designed to meet custom requirements including custom mounting hole patterns, through-holes, special shapes and custom materials.

TMC's 78 Series CleanTop II Breadboards are recommended for virtually all demanding breadboard applications.

How to Order

1. Choose prefix from chart indicating desired model.
2. Choose basic part number for the required size from size chart.
3. Assign suffix indicating hole pattern required.

Model Number Example

Prefix		Basic		Suffix
78	–	219	–	02R
Series		**Size**		**Hole Pattern**
CleanTop® II 3/16" skins		24" x 48" x 4"		1/4-20 holes on 1" centers Radius corners

Prefix Chart

Damping Level	Prefix
Standard dry damping	78

Suffix Chart
Hole Patterns/Laser Ports

Suffix	Hole Pattern-Threads	Double Density	Laser Port
00R	No Holes	no	no
01R	1" centers - 1/4-20	no	yes
02R	1" centers - 1/4-20	no	no
11R	25 mm centers - M6	no	yes
12R	25 mm centers - M6	no	no
01DR	1" staggered centers - 1/4-20	yes	yes
02DR	1" staggered centers - 1/4-20	yes	no
11DR	25 mm staggered centers - M6	yes	yes
12DR	25 mm staggered centers - M6	yes	no

Size Chart

Surface Dimensions			2 in. Thick (50 mm)	4 in. Thick (100 mm)
in.	ft	m		
12 x 12	1 x 1	0.3 x 0.3	78 – 105	78 – 205
12 x 24	1 x 2	0.3 x 0.6	78 – 107	78 – 207
12 x 36	1 x 3	0.3 x 0.9	78 – 108	78 – 208
12 x 48	1 x 4	0.3 x 1.2	78 – 109	78 – 209
12 x 72	1 x 6	0.3 x 1.8	78 – 110	78 – 210
20 x 30		0.5 x 0.75	78 – 111	78 – 211
20 x 40		0.5 x 1.0	78 – 112	78 – 212
24 x 24	2 x 2	0.6 x 0.6	78 – 113	78 – 213
24 x 36	2 x 3	0.6 x 0.9	78 – 115	78 – 215
24 x 48	2 x 4	0.6 x 1.2	78 – 119	78 – 219
24 x 60	2 x 5	0.6 x 1.5	78 – 121	78 – 221
24 x 72	2 x 6	0.6 x 1.8	78 – 123	78 – 223
24 x 96	2 x 8	0.6 x 2.4	78 – 124	78 – 224
30 x 30		0.75 x 0.75	78 – 125	78 – 225
30 x 36		0.75 x 0.9	78 – 127	78 – 227
30 x 40		0.75 x 1.0	78 – 129	78 – 229
30 x 48		0.75 x 1.2	78 – 131	78 – 231
30 x 60		0.75 x 1.5	78 – 132	78 – 232
30 x 72		0.75 x 1.8	78 – 191	78 – 291
30 x 96		0.75 x 2.4	78 – 192	78 – 292
36 x 36	3 x 3	0.9 x 0.9	78 – 133	78 – 233
36 x 48	3 x 4	0.9 x 1.2	78 – 135	78 – 235
36 x 60	3 x 5	0.9 x 1.5	78 – 136	78 – 236
36 x 72	3 x 6	0.9 x 1.8	78 – 139	78 – 239
36 x 96	3 x 8	0.9 x 2.4	78 – 140	78 – 240
40 x 40		1.0 x 1.0	78 – 141	78 – 241
40 x 60		1.0 x 1.5	78 – 143	78 – 243
40 x 80		1.0 x 2.0	78 – 144	78 – 244
48 x 48	4 x 4	1.2 x 1.2	78 – 147	78 – 247
48 x 60	4 x 5	1.2 x 1.5	78 – 149	78 – 249
48 x 72	4 x 6	1.2 x 1.8	78 – 151	78 – 251
48 x 96	4 x 8	1.2 x 2.4	78 – 155	78 – 255
Weight Factor (WF) (approx.); Area x WF = Total Weight			0.135 lb/in.^{2} (0.01 kg/cm^2)	0.195 lb/in.^{2} (0.014 kg/cm^2)

77 SERIES

CleanTop® II Breadboards

2 and 4 in. Thick (50, 100 mm)

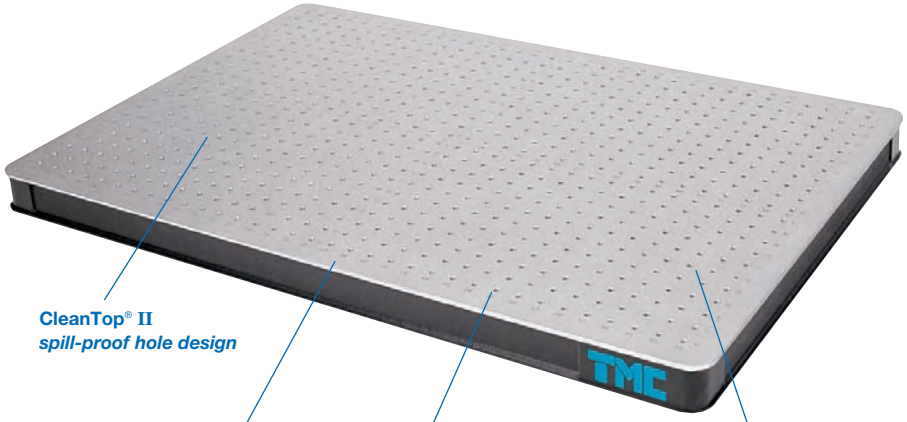

CleanTop® II *spill-proof hole design*

1/8 in. (3 mm) skins

One level of standard fixed damping

2 in. (50 mm) or 4 in. (100 mm) total panel thickness

GENERAL SPECIFICATIONS

Core: Steel honeycomb, closed-cell, 0.010 in. (0.2 mm) thick foil
Core shear modulus: 275,000 psi (19,300 kg/cm²)
Core cell size: <0.5 in.² (3 cm²)
Core density: 13.3 lb/ft³ (230 kg/m³)
Flatness: ∓ 0.005 in. (0.13 mm)
Top skin: 430 series ferromagnetic stainless steel
Sidewalls: Damped, formed steel channel, vinyl covered
Tapped holes: Backed by 1 in. (25 mm) long CleanTop II nylon cups

(For optional breadboard levelers, see p. 47.)

Our 77 Series CleanTop® II Breadboard differs from the 78 Series only in skin thickness. The 1/8 in. (3 mm) skin offering provides a relatively high level of rigidity with a significant cost reduction.

The 77 Series Breadboards are recommended when lighter weight construction is necessary or cost is critical.

How to Order

1. Choose prefix from chart indicating desired model.
2. Choose basic part number for the required size from Size Chart.
3. Assign suffix indicating hole pattern required.

Model Number Example

Prefix		Basic		Suffix
77	–	119	–	02R
Series		**Size**		**Hole Pattern**
CleanTop® II 1/8" (3 mm) skins		24" x 48" x 2"		1/4-20 holes on 1" centers Radius corners

Prefix Chart

Damping Level	Prefix
Standard dry damping	77

Suffix Chart
Hole Patterns/Laser Ports

Suffix	Hole Pattern-Threads	Double Density	Laser Port
00R	No Holes	no	no
01R	1" centers - 1/4-20	no	yes
02R	1" centers - 1/4-20	no	no
11R	25 mm centers - M6	no	yes
12R	25 mm centers - M6	no	no
01DR	1" staggered centers - 1/4-20	yes	yes
02DR	1" staggered centers - 1/4-20	yes	no
11DR	25 mm staggered centers - M6	yes	yes
12DR	25 mm staggered centers - M6	yes	no

Size Chart

Surface Dimensions			2 in. Thick (50 mm)	4 in. Thick (100 mm)
in.	ft	m		
12 x 12	1 x 1	0.3 x 0.3	77 – 105	77 – 205
12 x 24	1 x 2	0.3 x 0.6	77 – 107	77 – 207
12 x 36	1 x 3	0.3 x 0.9	77 – 108	77 – 208
12 x 48	1 x 4	0.3 x 1.2	77 – 109	77 – 209
12 x 72	1 x 6	0.3 x 1.8	77 – 110	77 – 210
20 x 30		0.5 x 0.75	77 – 111	77 – 211
20 x 40		0.5 x 1.0	77 – 112	77 – 212
24 x 24	2 x 2	0.6 x 0.6	77 – 113	77 – 213
24 x 36	2 x 3	0.6 x 0.9	77 – 115	77 – 215
24 x 48	2 x 4	0.6 x 1.2	77 – 119	77 – 219
24 x 60	2 x 5	0.6 x 1.5	77 – 121	77 – 221
24 x 72	2 x 6	0.6 x 1.8	77 – 123	77 – 223
24 x 96	2 x 8	0.6 x 2.4	77 – 124	77 – 224
30 x 30		0.75 x 0.75	77 – 125	77 – 225
30 x 36		0.75 x 0.9	77 – 127	77 – 227
30 x 40		0.75 x 1.0	77 – 129	77 – 229
30 x 48		0.75 x 1.2	77 – 131	77 – 231
30 x 60		0.75 x 1.5	77 – 132	77 – 232
30 x 72		0.75 x 1.8	77 – 191	77 – 291
30 x 96		0.75 x 2.4	77 – 192	77 – 292
36 x 36	3 x 3	0.9 x 0.9	77 – 133	77 – 233
36 x 48	3 x 4	0.9 x 1.2	77 – 135	77 – 235
36 x 60	3 x 5	0.9 x 1.5	77 – 136	77 – 236
36 x 72	3 x 6	0.9 x 1.8	77 – 139	77 – 239
36 x 96	3 x 8	0.9 x 2.4	77 – 140	77 – 240
40 x 40		1.0 x 1.0	77 – 141	77 – 241
40 x 60		1.0 x 1.5	77 – 143	77 – 243
40 x 80		1.0 x 2.0	77 – 144	77 – 244
48 x 48	4 x 4	1.2 x 1.2	77 – 147	77 – 247
48 x 60	4 x 5	1.2 x 1.5	77 – 149	77 – 249
48 x 72	4 x 6	1.2 x 1.8	77 – 151	77 – 251
48 x 96	4 x 8	1.2 x 2.4	77 – 155	77 – 255
Weight Factor (WF) (approx.); Area x WF = Total Weight			0.100 lb/in.² (0.007 kg/cm²)	0.150 lb/in.² (0.011 kg/cm²)

75 SERIES

Lightweight Breadboards

2 in. (50 mm) Thick

U.S. Patent No. 5,558,920

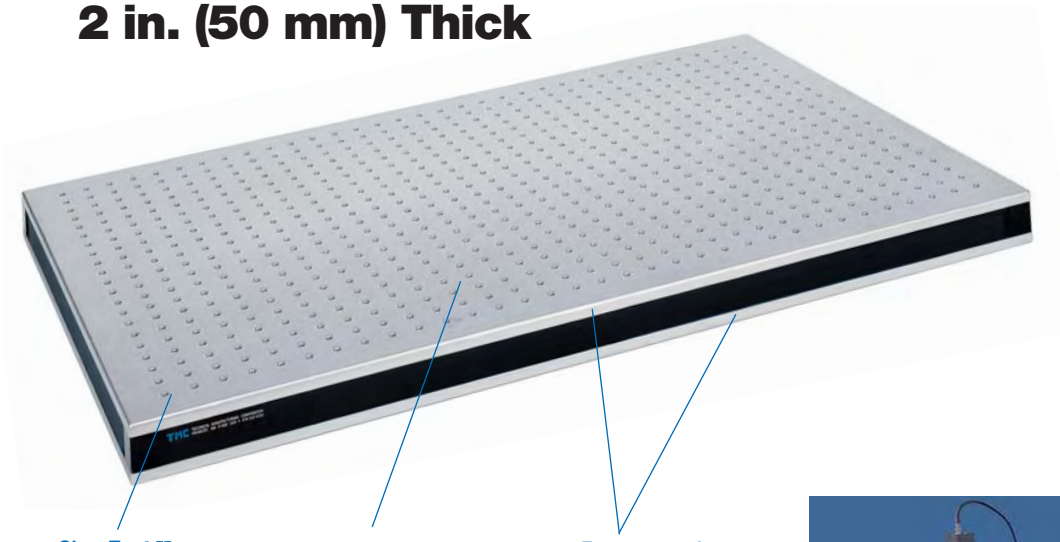

CleanTop® II spill-proof holes

0.075 in. (2 mm) top skin with formed, tapped holes

Ferromagnetic stainless steel top and bottom

GENERAL SPECIFICATIONS

Core: Steel honeycomb, closed-cell, 0.010 in. (0.2 mm) thick foil
Core shear modulus: 275,000 psi (19,300 kg/cm²)
Core cell size: <0.5 in.² (3 cm²)
Core density: 13.3 lb/ft³ (230 kg/m³)
Flatness: ∓ 0.005 in. (0.13 mm)
Top skin: 430 series stainless steel, 0.075 in. (2 mm) thick
Bottom skin: 400 series stainless steel, 0.075 in. (2 mm) thick
Sidewalls: High-pressure laminate
Tapped holes: Backed by individual, CleanTop II cups; 3 threads



Trioptics Gmbh PrismMaster goniometer Photo courtesy of Mildex Inc.

Another in a long line of TMC innovations, our 75 Series Breadboards minimize both weight and cost. A patented manufacturing technique allows us to form countersunk, tapped holes in a thin top skin of stainless steel. The holes are not drilled or punched, but fabricated in a way that effectively "thickens" the skin in a small ring around the threads. No inserts are used and the tapped holes are three threads deep.

These tops have relatively high levels of rigidity, as they utilize our standard steel core. However, with their thin top and bottom skins, they cannot have the rigidity and damping properties of our 78 and 77 CleanTop® II Breadboards. They are ideal when light loads are anticipated and low weight and/or cost are the most crucial factors.

The weight savings – 50% less than our 78 Series Breadboards – is derived only from the lighter gauge skins.

This lightweight design is available from stock in the sizes listed below. A full range of sizes and materials is available on a custom basis. Contact TMC for pricing and delivery for custom configurations.

Features

- Ultra-lightweight design – weighs less than 9 lbs/ft² (44 kg/m²).
- Stainless steel top and bottom skins.
- Aluminum and carbon steel versions available.
- Very low prices, even in low quantity.
- Formed holes are countersunk and tapped three threads.
- Formed holes in top skin add to rigidity.
- CleanTop II individual cups under each hole make the core spill proof.

How to Order
Ordering Chart — Model Number

Surface Dimensions		Model Number		Weight	
in.	mm	1/4–20 holes on 1 in. centers	M6 holes on 25 mm centers	lbs	kg
19 x 23	450 x 600	75SSC – 103 – 02	75SSC – 103 – 12	31	14
19 x 47	450 x 1200	75SSC – 104 – 02	75SSC – 104 – 12	62	28
23 x 23	600 x 600	75SSC – 113 – 02	75SSC – 113 – 12	37	17
23 x 35	600 x 900	75SSC – 115 – 02	75SSC – 115 – 12	56	25
23 x 47	600 x 1200	75SSC – 119 – 02	75SSC – 119 – 12	74	34
35 x 47	900 x 1200	75SSC – 135 – 02	75SSC – 135 – 12	111	50

Note: Only the most common, stocked sizes are listed.
A full range of sizes is available. Contact TMC for details.

www.gmp.ch

GMP SA Siège principale: Avenue des Baumettes 17 CH-1020 Renens +41 21 633 21 21 Fax. +41 21 633 21 29 info@gmp.ch
GMP SA Büro Zürich: Dübendorfstrasse 11a CH-8117 Fällanden +41 44 825 34 00 Fax. +41 44 825 34 01 so@gmp.ch

SYSTEM 1

Modular Post-Mount Supports



Features

- Modular design for upgradability, maximum convenience
- Choose rigid support or Gimbal Piston vibration isolation
- Retractable casters
- Safety tiebars
- A range of heights and capacities

GENERAL SPECIFICATIONS

Isolator natural frequency:
High Input
Vertical = 1.0 Hz
Horizontal = 0.8 Hz
Low Input
Vertical = 1.2-1.7 Hz
Horizontal = 1.0-1.5 Hz

Isolation efficiency @ 5 Hz:
Vertical = 80-90%
Horizontal = 80-90%

Isolation efficiency @ 10 Hz:
Vertical = 90-99%
Horizontal = 90-99%

Finish: Medium texture black powder coat paint

Facilities required:
80 psi nitrogen or air

Another TMC innovation gives you superior convenience and economy in acquiring precisely the equipment you need for supporting optical tables or other large work surfaces. The unique System 1 design lets you customize basic features and still have off-the-shelf prices and speedy delivery.

There are six categories of options, and the convenient selection charts help you construct a part number for ordering. Systems can also be easily upgraded – whether to convert from a leveling stand to an isolator or add casters – whenever required.

Options

Isolators/Leveling Posts.

If you need vibration isolation now, the choice is our Gimbal Piston™ isolators, which are unsurpassed in the industry for vertical and horizontal vibration attenuation – especially as demonstrated at realistic, low levels of input.

If a rigid stand will suffice for the present, System 1 offers an economical leveling mount option with rugged, adjustable jack screws that provide +2 1/2 and -0 in. (+62 and -0 mm) of travel. Later, you can upgrade the system to full vibration isolation performance, with a total cost only slightly more than if you had opted for this feature originally.

Load Capacities. Depending on the weight of your table and onboard equipment, you can select support systems with capacities of 1,400, 4,000, 6,000, 10,000, or 15,000 lb (600, 2,000, 3,000, 4,500, or 7,000 kg, respectively). Customized systems can be configured from standard components to support virtually any structure.

Height. Seven post heights are available as standard: 12, 16, 18, 22, 24, 28, and 32 in. (300, 400, 450, 550, 600, 700, and 800 mm, respectively) – though not all sizes are available in all capacities. Taking into account the table thickness and height of equipment components, select the post size that provides the working height you need. Ergonomic convention would dictate 36 in. (900 mm) from floor to table top surface.

Tiebars. For safety reasons, tiebars are recommended. They are mandatory when you choose casters or anticipate upgrading to them. If you require constant access to the area under the table, free-standing support bases will provide more than adequate stability.

Casters. System 1's optional casters are of a rugged, heavy-duty design making an installed table easily movable when they are engaged. Once the table is positioned, the casters retract to establish solid floor contact during equipment operation. Like other System 1 features, they can be integrated at the outset or purchased later if you choose to upgrade. Casters retract externally on the smallest capacity posts, internally on the intermediate, and are not available for the highest capacity. They are not available on posts less than 18 in. tall.

Configurations. A simple four-post frame configuration is the most common; however, depending on the size and shape of the supported structure and on the weight and position of onboard equipment, another multiple support system may be preferred. For unusual size tops or if you have any doubt as to your approach, please call us.

System 1 Vibration Isolation Performance (actual measured data)

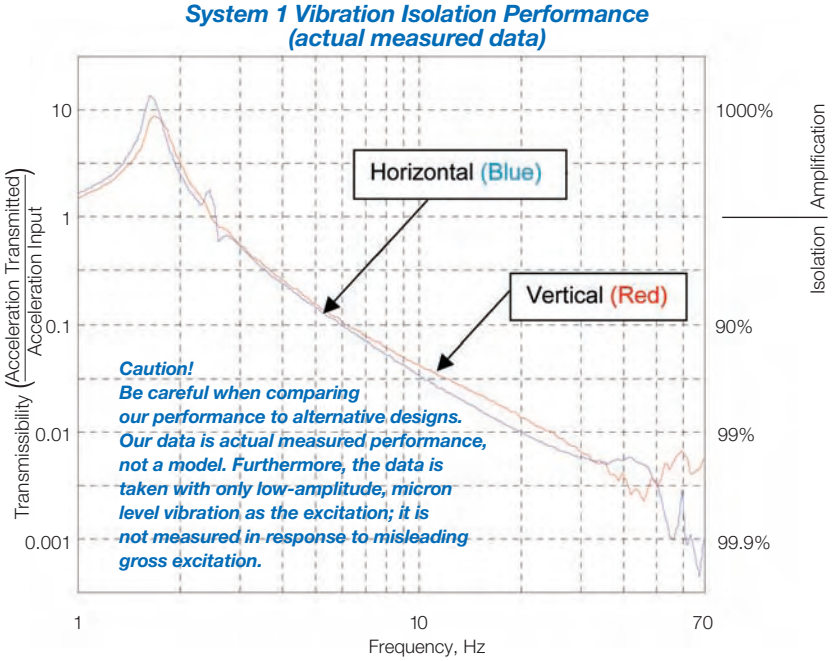

Measured performance of TMC 14 Series System 1 Gimbal Piston™ Isolators



System 1 Gimbal Piston™ Isolators are ideal for both optical tops and custom applications.

SYSTEM 1

4-Post Systems with Tiebars

Gimbal Piston™ Isolators and Rigid Supports

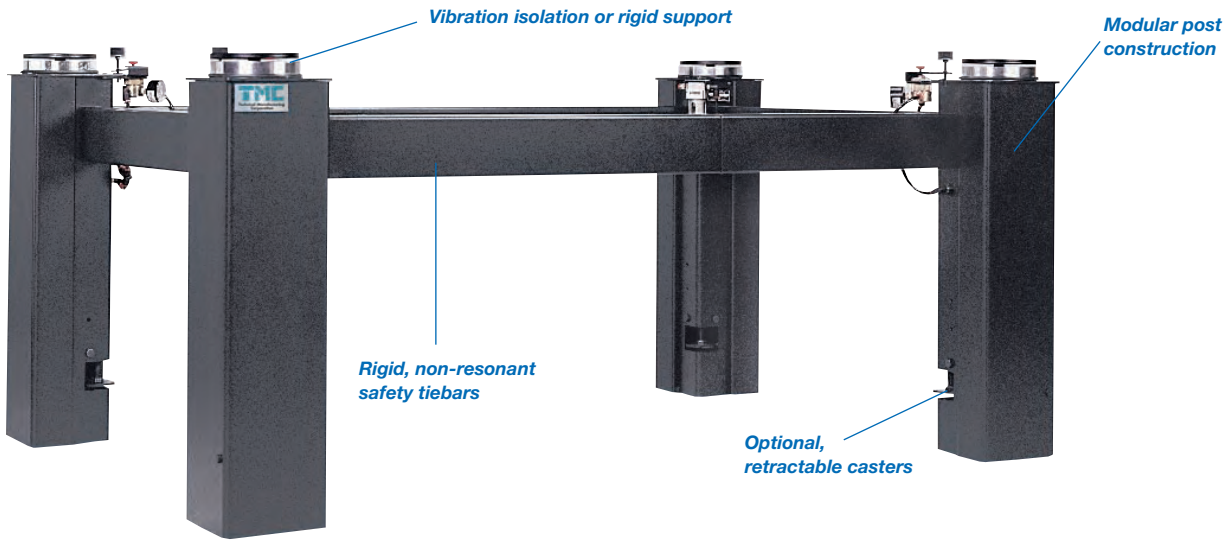

The preferred choice for supporting most optical tops is the 4-Post System with safety tiebars. Choose from vibration isolation or rigid support, with or without casters, and from a range of heights and capacities.

How to Order: See instructions on Page 41.

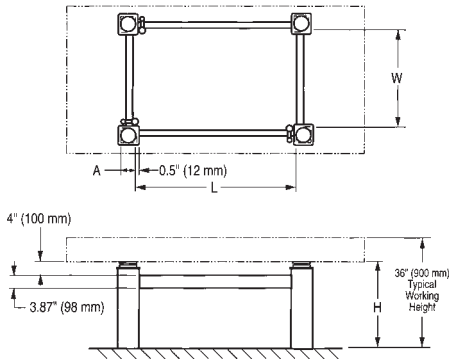

Height Code Ordering Chart

Height Code H	Height in.	Height mm	Standard Heights Available Prefix 11 & 12	Standard Heights Available Prefix 13 & 14
2	12	300		•
3	16	400		•
4	18	450		•
5	22	550		•
6	24	600		•
7	28	700	•	•
8	32	800	•	•

4-Post System Ordering Chart

Application: Typical Size of Optical Top		Model Number				H Height: Specify Height Code	A Cross-Section		W Width		L Length		Capacity	
		Gimbal Piston™ Isolators		Rigid Leveling Stand										
in.	mm	w/casters	w/o casters	w/casters	w/o casters		in.	mm	in.	mm	in.	mm	lbs	kg
30 x 36	750 x 900	12 – 42H – 28	12 – 41H – 28	11 – 42H – 28	11 – 41H – 28	See Height Code Ordering Chart	4	100	20	500	26	650	1400	600
30 x 48	750 x 1200	12 – 42H – 29	12 – 41H – 29	11 – 42H – 29	11 – 41H – 29		4	100	20	500	35	875	1400	600
30 x 60	750 x 1500	12 – 42H – 24	12 – 41H – 24	11 – 42H – 24	11 – 41H – 24		4	100	20	500	40	1000	1400	600
30 x 72	750 x 1800	14 – 42H – 14	14 – 41H – 14	13 – 42H – 14	13 – 41H – 14		6	150	15	375	40	1000	4000	2000
30 x 96	750 x 2400	14 – 42H – 15	14 – 41H – 15	13 – 42H – 15	13 – 41H – 15		6	150	15	375	50	1250	4000	2000
30 x 120	750 x 3000	14 – 42H – 16	14 – 41H – 16	13 – 42H – 16	13 – 41H – 16		6	150	15	375	60	1500	4000	2000
36 x 48	900 x 1200	12 – 42H – 89	12 – 41H – 89	11 – 42H – 89	11 – 41H – 89		4	100	26	650	35	875	1400	600
36 x 60	900 x 1500	12 – 42H – 84	12 – 41H – 84	11 – 42H – 84	11 – 41H – 84		4	100	26	650	40	1000	1400	600
36 x 72	900 x 1800	14 – 42H – 24	14 – 41H – 24	13 – 42H – 24	13 – 41H – 24		6	150	20	500	40	1000	4000	2000
36 x 96	900 x 2400	14 – 42H – 25	14 – 41H – 25	13 – 42H – 25	13 – 41H – 25		6	150	20	500	50	1250	4000	2000
36 x 120	900 x 3000	14 – 42H – 26	14 – 41H – 26	13 – 42H – 26	13 – 41H – 26		6	150	20	500	60	1500	4000	2000
40 x 60	1000 x 1500	14 – 42H – 89	14 – 41H – 89	13 – 42H – 89	13 – 41H – 89		6	150	26	650	35	875	4000	2000
40 x 80	1000 x 2000	14 – 42H – 84	14 – 41H – 84	13 – 42H – 84	13 – 41H – 84		6	150	26	650	40	1000	4000	2000
40 x 120	1000 x 3000	14 – 42H – 86	14 – 41H – 86	13 – 42H – 86	13 – 41H – 86		6	150	26	650	60	1500	4000	2000
48 x 60	1200 x 1500	14 – 42H – 39	14 – 41H – 39	13 – 42H – 39	13 – 41H – 39		6	150	30	750	35	875	4000	2000
48 x 72	1200 x 1800	14 – 42H – 34	14 – 41H – 34	13 – 42H – 34	13 – 41H – 34		6	150	30	750	40	1000	4000	2000
48 x 96	1200 x 2400	14 – 42H – 35	14 – 41H – 35	13 – 42H – 35	13 – 41H – 35		6	150	30	750	50	1250	4000	2000
48 x 120	1200 x 3000	14 – 42H – 36	14 – 41H – 36	13 – 42H – 36	13 – 41H – 36		6	150	30	750	60	1500	4000	2000
48 x 144	1200 x 3600	14 – 42H – 37	14 – 41H – 37	13 – 42H – 37	13 – 41H – 37		6	150	30	750	70	1750	4000	2000
59 x 60	1500 x 1500	14 – 42H – 49	14 – 41H – 49	13 – 42H – 49	13 – 41H – 49		6	150	40	1000	35	875	4000	2000
59 x 72	1500 x 1800	14 – 42H – 44	14 – 41H – 44	13 – 42H – 44	13 – 41H – 44		6	150	40	1000	40	1000	4000	2000
59 x 80	1500 x 2000	14 – 42H – 44	14 – 41H – 44	13 – 42H – 44	13 – 41H – 44		6	150	40	1000	40	1000	4000	2000
59 x 96	1500 x 2400	14 – 42H – 45	14 – 41H – 45	13 – 42H – 45	13 – 41H – 45		6	150	40	1000	50	1250	4000	2000
59 x 120	1500 x 3000	14 – 42H – 46	14 – 41H – 46	13 – 42H – 46	13 – 41H – 46		6	150	40	1000	60	1500	4000	2000
59 x 144	1500 x 3600	14 – 42H – 47	14 – 41H – 47	13 – 42H – 47	13 – 41H – 47		6	150	40	1000	70	1750	4000	2000

*Casters can only be used with post heights of 18 in. and taller.

SYSTEM 1

6-Post Systems with Tiebars

Gimbal Piston™ Isolators and Rigid Supports

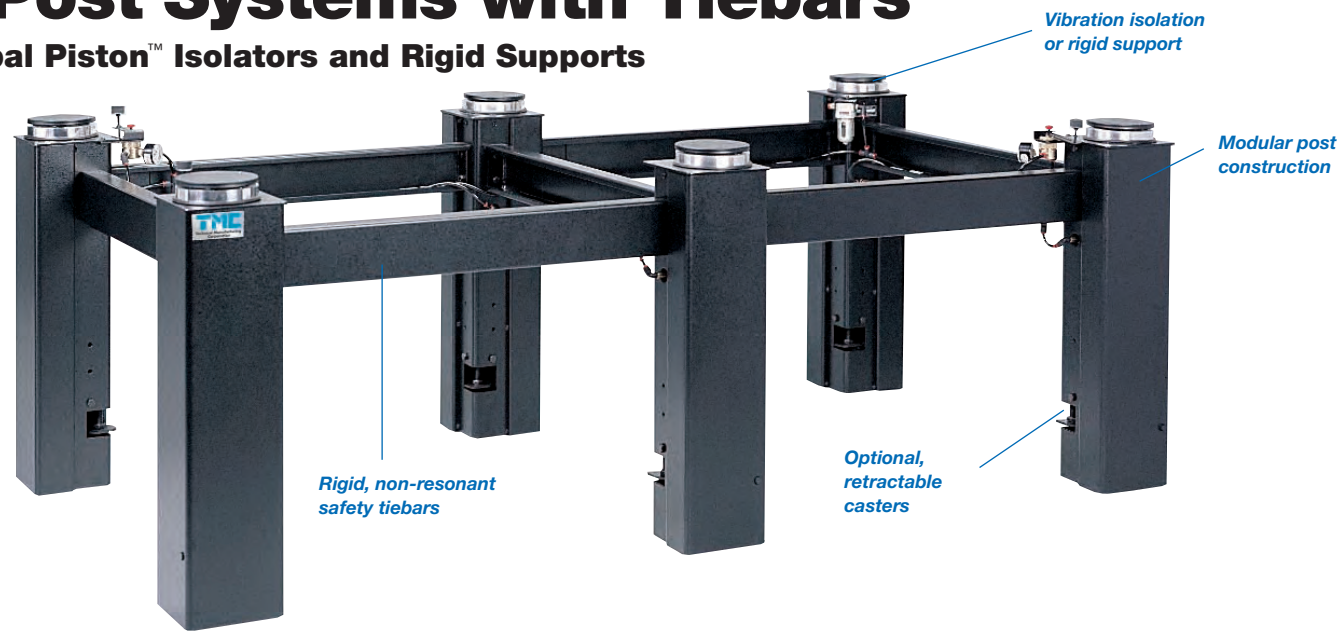

Most tops more than 10 ft (3 m) long are best supported by the 6-Post System with Tiebars. In addition to the higher weight capacity, the structural characteristics of the top are enhanced by the additional support points.

How to Order: See instructions below.

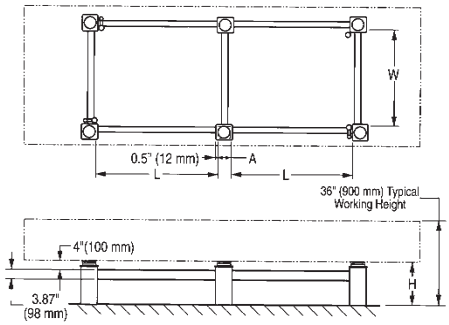

Height Code Ordering Chart

Height Code H	Height in.	Height mm	Standard Heights Available Prefix 13 & 14
2	12	300	•
3	16	400	•
4	18	450	•
5	22	550	•
6	24	600	•
7	28	700	•
8	32	800	•

6–Post System Ordering Chart

Application: Typical Size of Optical Top		Model Number				H Height: Specify Height Code	A Cross-Section		W Width		L Length		Capacity	
		Gimbal Piston™ Isolators		Rigid Leveling Stand										
in.	mm	w/casters	w/o casters	w/casters	w/o casters		in.	mm	in.	mm	in.	mm	lbs	kg
48 x 120	1200 x 3000	14 – 62H – 33	14 – 61H – 33	13 – 62H – 33	13 – 61H – 33	See Height Code Ordering Chart	6	150	30	750	30	750	6000	3000
48 x 144	1200 x 3600	14 – 62H – 34	14 – 61H – 34	13 – 62H – 34	13 – 61H – 34		6	150	30	750	40	1000	6000	3000
48 x 168	1200 x 4200	14 – 62H – 35	14 – 61H – 35	13 – 62H – 35	13 – 61H – 35		6	150	30	750	50	1250	6000	3000
48 x 192	1200 x 4800	14 – 62H – 36	14 – 61H – 36	13 – 62H – 36	13 – 61H – 36		6	150	30	750	60	1500	6000	3000
59 x 120	1500 x 3000	14 – 62H – 43	14 – 61H – 43	13 – 62H – 43	13 – 61H – 43		6	150	40	1000	30	750	6000	3000
59 x 144	1500 x 3600	14 – 62H – 44	14 – 61H – 44	13 – 62H – 44	13 – 61H – 44		6	150	40	1000	40	1000	6000	3000
59 x 168	1500 x 4200	14 – 62H – 45	14 – 61H – 45	13 – 62H – 45	13 – 61H – 45		6	150	40	1000	50	1250	6000	3000
59 x 192	1500 x 4800	14 – 62H – 46	14 – 61H – 46	13 – 62H – 46	13 – 61H – 46		6	150	40	1000	60	1500	6000	3000

How to Order:

1. Determine whether vibration isolation is required or whether rigid, non-resonant support is adequate.
2. Choose whether or not the caster option is desired.*
3. Find the size of the optical top to be supported in the left column of the ordering chart.
4. Pick the model number from the appropriate column.
5. Assign the height code (H) to the catalog number based on the desired height of the table surface and thickness of the optical top.
6. Ensure that the support has adequate capacity by comparing the capacity to the optical top weight plus equipment load. Top weight is equal to the top area times the weight factor from the bottom of the optical top size charts. The isolator capacity should be at least double the total load.
7. Contact TMC when in doubt and for unusually sized tops.

*Casters can only be used with post heights of 18 in. and taller.

SYSTEM 1

Free-Standing Individual Posts

Gimbal Piston™ Isolators and Rigid Supports



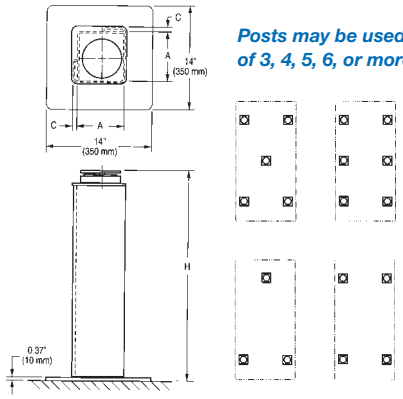

Posts may be used in groups of 3, 4, 5, 6, or more.

Free-Standing Posts are a convenient alternative to posts with tiebars when open access between the posts is necessary. Though generally configured in sets of four and six legs, other configurations include three and five legs.

The independent posts offer the maximum flexibility in post positioning with respect to the optical top.

Free-Standing Posts are especially convenient for supporting large coupled table systems.

Single-Post System Ordering Chart

Catalog Number		H		A		C		Capacity Per Post	
Gimbal Piston™ Isolator	Rigid Pos	in.	mm	in.	mm	in.	mm	lbs	kg
12 – 137 – 00	11 – 137 – 00	28	700	4	100	1/2	13	350	150
12 – 138 – 00	11 – 138 – 00	32	800	4	100	1/2	13	350	150
14 – 132 – 00	13 – 132 – 00	12	300	6	150	1/2	13	1000	500
14 – 133 – 00	13 – 133 – 00	16	400	6	150	1/2	13	1000	500
14 – 134 – 00	13 – 134 – 00	18	450	6	150	1/2	13	1000	500
14 – 135 – 00	13 – 135 – 00	22	550	6	150	1/2	13	1000	500
14 – 136 – 00	13 – 136 – 00	24	600	6	150	1/2	13	1000	500
14 – 137 – 00	13 – 137 – 00	28	700	6	150	1/2	13	1000	500
14 – 138 – 00	13 – 138 – 00	32	800	6	150	1/2	13	1000	500
16 – 133 – 00	Contact TMC for 2500 lb (1100 kg) Rigid Post details	16	400	8	200	0	0	2500	1000
16 – 135 – 00		22	550	8	200	0	0	2500	1000
16 – 137 – 00		28	700	8	200	0	0	2500	1000

Note: Free-Standing Individual Posts are incompatible with retractable casters. 12 in. tall posts do not incorporate baseplates.

Height Control Valve Kit Ordering Chart

Catalog Number	Valve Kit
SV-12	Standard Valve Kit for (4) 12-Series Posts
SV-14	Standard Valve Kit for (4) 14-Series Posts
SV-16	Standard Valve Kit for (4) 16-Series Posts

How to Order:

1. Determine whether vibration isolation is required or whether rigid, non-resonant support is adequate.
2. Calculate the required capacity by adding the equipment load to the optical top weight. Top weight is equal to top area times the weight factor from the bottom of the optical top selection charts. Generally, 2 in.(50 mm) and 4 in. (100 mm) thick tops use 11 and 12 prefix posts, and 8 in. (200 mm) and 12 in. (300 mm) tops require 13 and 14 prefix tops.
3. Choose the indicated catalog number from the ordering chart.
4. 4-Post Systems are recommended for most applications. Other configurations require that total capacity exceeds optical top mass plus equipment load by a factor of 2. Choose the desired number of posts.
5. Leveling screws may be provided in the corners of the baseplate. This optional feature is of great assistance on larger tables and in labs with uneven floors. To specify, change the fourth digit of the catalog number from "3" to "4" (for example, 14-135-00 becomes 14-145-00). Note that this will add one inch (25 mm) to the overall height.
6. Height control valve kits (included with 4-Post and 6-Post Systems) must be specified when ordering individual posts. Choose valve kit from the bottom of the chart corresponding to the chosen posts. Note that if more than 4 posts are combined, a suffix must be added to the valve kit corresponding to the number of posts (e.g., for 8 of 14-134-00, the correct valve kit is SV-14-8).
7. Contact TMC when in doubt and for unusual configurations.

Options & Accessories

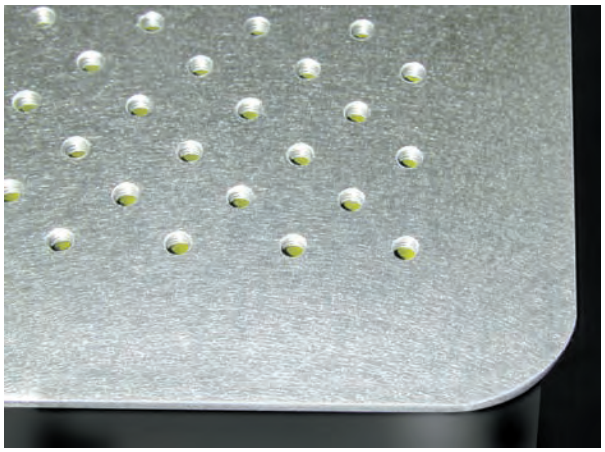

CleanTop® II DoubleDensity™ construction (288 holes per ft²)

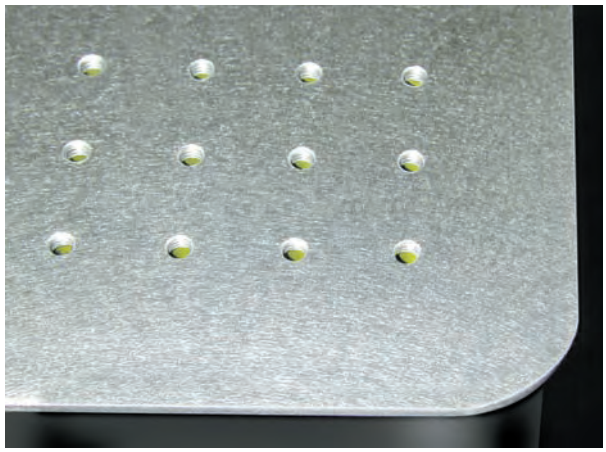

Standard TMC CleanTop® II construction (144 holes per ft²)

CleanTop® II DoubleDensity™

Double the number of tapped holes

TMC introduces the latest in our long history of innovations to the optical table industry. By combining our existing uniquely small honeycomb cell size (0.50 in.²) with our patented CleanTop® II individual sealed hole technology, we are now able to offer twice the number of tapped holes. Because we use our existing honeycomb core design, which is twice the cell density as our nearest competitor, there are absolutely no changes to any performance specifications. No alterations to the core design were necessary to accommodate the additional CleanTop cups.

Features

- Twice as many tapped holes as conventional 1 in. or 25 mm grids.
- 288 holes per ft², 3,200 holes per m².
- Twice the number of honeycomb cells (0.50 in.²) as our nearest competitor.
- Core density unchanged, the highest in the industry (13.3 lb per ft³).
- Hole pattern is 1/4-20 on 1 in. staggered centers or M6 on 25 mm staggered centers.
- Available with any version of TMC's CleanTop II at a nominal additional fee.
- No change to any performance specifications.

Benefits

- Allows more precise location of positioning equipment
- Translation stages require less travel
- Compatible with existing 1/4-20 on 1 in. and M6 on 25 mm patterns

How to Order

After choosing your optical top, simply specify the corresponding suffix from the chart below by adding the letter "D" to the suffix.

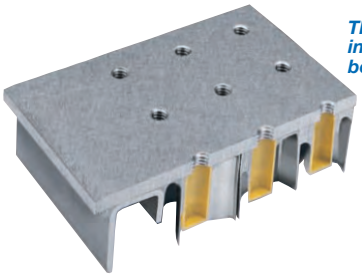

TMC CleanTop® II individual cups behind each hole

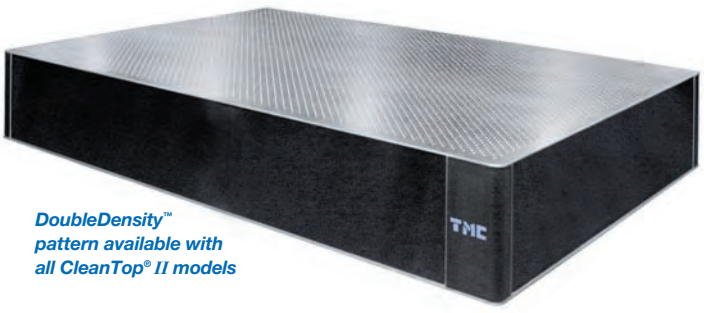

DoubleDensity™ pattern available with all CleanTop® II models

Suffix Chart
Hole Patterns/Laser Ports

Suffix	Hole Pattern-Threads	DoubleDensity	Laser Port
00R	No Holes	no	no
01R	1" centers - 1/4-20	no	yes
02R	1" centers - 1/4-20	no	no
11R	25 mm centers - M6	no	yes
12R	25 mm centers - M6	no	no
01DR	1" staggered centers - 1/4-20	yes	yes
02DR	1" staggered centers - 1/4-20	yes	no
11DR	25 mm staggered centers - M6	yes	yes
12DR	25 mm staggered centers - M6	yes	no

Options & Accessories (continued)

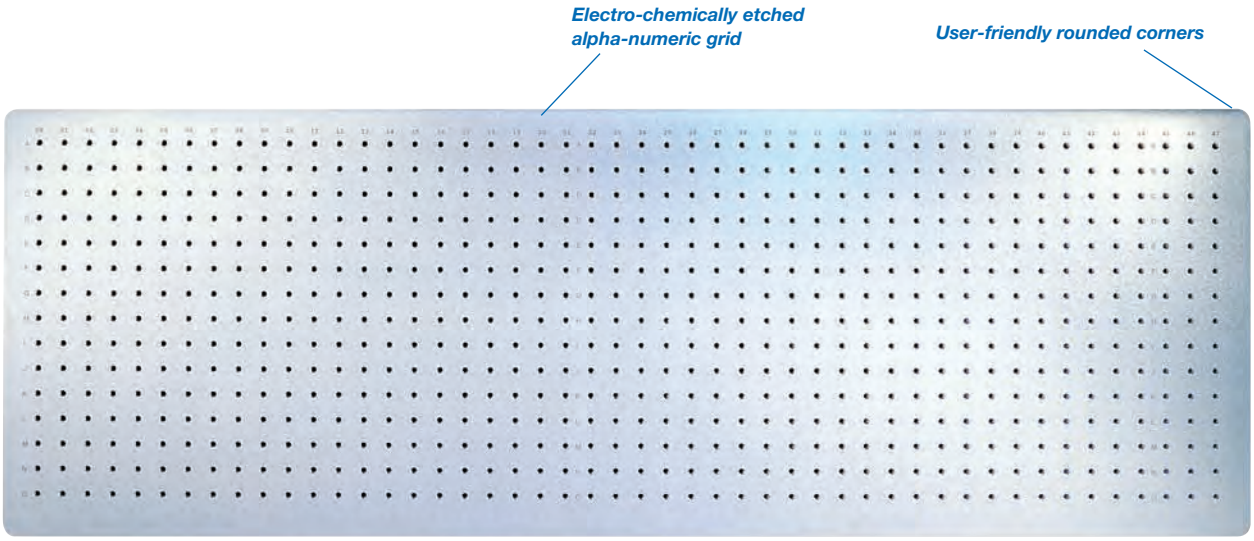

TMC offers a comprehensive line of options and accessories to help you obtain maximum utility from TMC optical tables, breadboards, and supports. We also provide unequaled expertise and fast turnaround in designing and building custom configurations to your specifications. Requirements for joined tables, tables made of special materials, and for custom through-hole patterns and ports are readily accommodated.

Rounded Corners

CleanTop® II Tables now include user-friendly rounded corners as a standard feature. We laser-cut a generous, 1-in. radius at each corner of the table.

Conventional table construction produces a 90° bend which is subsequently "dulled" by grinding or filing. Though dull, this right angle often leads to painful hip bruises for those logging long hours in the lab. The rounded corner feature eliminates this inconvenience. If required, conventional square corners are available at no extra charge.

Alpha-Numeric Grid

A handy option to ease replicating an optical setup is our Alpha-Numeric Grid pattern. By electro-chemically etching a coordinate pattern on the top surface, each tapped hole has an address. This is also helpful in documenting a setup for OEM applications.



How to Order:

Alpha-Numeric Grid
To specify the Alpha-Numeric Grid, add the suffix G to the TMC model number (for instance, 78-455-02GR).



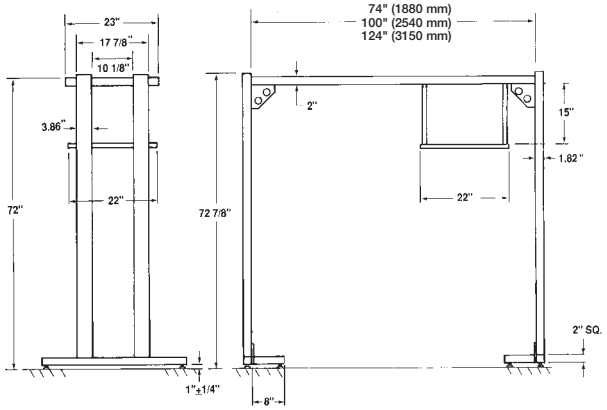

Overhead Shelf

An overhead shelf is an ideal storage rack for equipment and instrumentation used in conjunction with an optical table. Spanning the long axis of the table, the overhead shelf is adjustable in height and free standing, so vibration isolation will not be compromised. It includes a UL-approved electrical strip with two eight-grounded outlet strips in the 6-ft shelf and four eight-grounded outlets in the 8- and 10-ft shelves. (125 V, 60 Hz, 15 A).

Optional accessories include a second tier shelf or a hanging monitor shelf. Each shelf includes two rows of holes on a 2 in. (50 mm) spacing to facilitate mounting of fixtures.

Built to the same rugged standards you have come to expect from TMC, the structure is formed steel with a non-resonant design, black powder coat finish, and leveling feet for uneven floors. Capacity is 200 lb (90 kg).

For custom requirements such as non-U.S. format outlet strips, contact TMC.

Overhead Shelf Ordering Chart

Shelf Model	Description	L	
		in.	mm
81-231-01	Complete shelf system	72.4	1840
81-232-01	Complete shelf system	96.4	2450
81-233-01	Complete shelf system	120.4	3060
81-236-01	Second shelf tier	72.4	1840
81-237-01	Second shelf tier	96.4	2450
81-238-01	Second shelf tier	120.4	3060
81-239-01	Hanging monitor shelf as shown		



Laser Shelves

TMC tables larger than 36 in. x 72 in. (900 x 1,800 mm) and supported at least 18 in. (450 mm) above the floor can be fitted with a laser shelf. The shelf consists of an additional undrilled 2 in. (50 mm) thick breadboard attached to the bottom plate of the table. Though such a support system will not match the performance of direct mounting of equipment to the table's top surface, for less sensitive applications this arrangement can save valuable working space on the top. In some cases, our tiebars may interfere with shelf mounting. Contact us if you are in doubt.

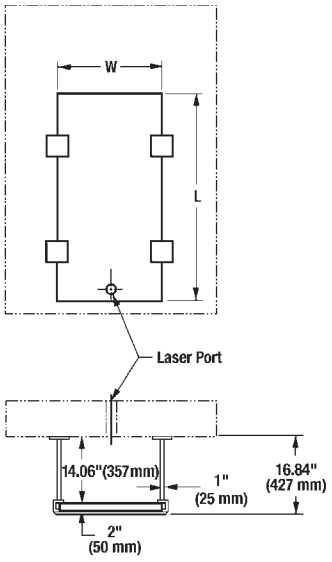

Laser Shelf Ordering Chart

Shelf Model	Description	W	L
81-172-01	Shelf-imperial hardware	24"	48"
81-172-02	Shelf-metric hardware	600 mm	1200 mm
81-173-01	Shelf-imperial hardware	24"	72"
81-173-02	Shelf-metric hardware	600 mm	1800 mm

Order as a complete set or order the breadboard separately.

Options & Accessories (continued)



Enclosures

TMC manufactures two types of environmental enclosures to provide draft, dust, light, and acoustic isolation for optical tables.

Caution! The enclosures are not designed to protect eyes from laser hazards.

Free-Standing Enclosure. A floor-mounted frame with removable, soft vinyl sidewalls. The panels are opaque with the exception of transparent panels along the front side. This enclosure is designed for tables with an operating height of 36 in. (900 mm). Since this enclosure does not contact the table, it does not compromise any of the table's damping or isolation performance. This enclosure is also available with a special construction of either all transparent or all opaque panels.

Table-Top Enclosure. Consists of a frame mounted directly to the table top. The side panels are a clear acrylic sheet construction and mount in sliding tracks. "Smoked" panels are available as a special option in place of the clear panels. In addition, an air blower/filter is available with this enclosure as an option, mounted to a side panel for additional dust protection. This is not recommended for vibration isolation systems.

Enclosure Ordering Chart

Optical Top Size		Free-Standing Enclosure	Table-Top Enclosure	
in.	mm		English	Metric
48 x 72	1200 x 1800	81–211–01	81–221–01	81–221–02
48 x 96	1200 x 2400	81–212–01	81–222–01	81–222–02
48 x 120	1200 x 3000	81–213–01	81–223–01	81–223–02
48 x 144	1200 x 3600	81–214–01	81–224–01	81–224–02
60 x 72	1500 x 1800	81–215–01	81–225–01	81–225–02
60 x 96	1500 x 2400	81–216–01	81–226–01	81–226–02
60 x 120	1500 x 3000	81–217–01	81–227–01	81–227–02
60 x 144	1500 x 3600	81–218–01	81–228–01	81–228–02
Air blower/filter (for table-top enclosures only)			81–201	

Earthquake Restraint System

TMC's earthquake restraint bracket system provides increased safety and stability for optical tables in high-risk earthquake areas without affecting table performance.

The TMC earthquake restraint system relies on top brackets and upper tiebars to control motion of the table top and, where severe occurrences are anticipated, floor brackets with lower tiebars to secure the support structure to the floor. Under normal conditions, there is no contact between the top brackets and the support structure, so that performance of the optical top and the vibration isolation system are not affected. Clearances are large and brackets are lightweight, stiff, well-damped, unobtrusive and encapsulated with soft elastomer to provide gradual snubbing.

Our earthquake restraint bracket system can be retrofitted to an installed TMC optical table or specified with a new order.

Inferior, competitive designs may depend on large, pendulum-like structures that hang below the table top and connect to the floor. Since pendulums characteristically have low resonant frequencies, these add-on structures lower the resonant frequency of the table top and degrade compliance and damping. In addition, the floor connection creates a potential rigid coupling between table top and floor, which can compromise vibration isolation if it drifts out of calibration.

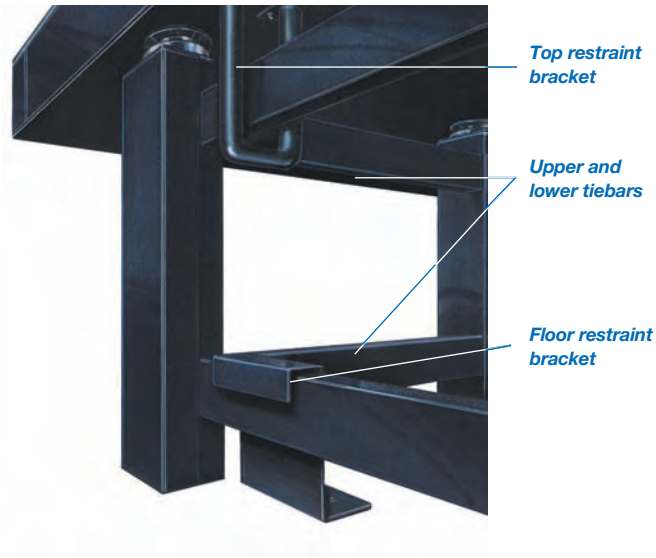

Top Restraint Brackets. Top brackets encircle the upper tiebar and bolt to the underside of the top. They mount within a few inches of a support post and restrict the motion of the top (see illustration). Normally, four brackets are required for a typical table. Specify brackets individually. On new table orders, the top will be supplied with mounting holes. For retrofitting tables, contact TMC for recommendations.

How to Order

No. 83-102-01 = one top restraint bracket (including 8 bolts)

Floor Restraint Brackets. Floor brackets are recommended where quakes are anticipated. They encircle the lower tiebars close to the support posts and bolt to the floor (see illustration). Four brackets are usually recommended. Since standard TMC post-mount support systems are supplied with only upper tiebars, an additional set of four lower tiebars must be specified for both new and retrofitted orders. Specify both floor brackets and tiebars individually.

Upper and Lower Tiebars. Standard post-mount support systems are supplied only with upper tiebars. An additional set of lower tiebars is required when floor restraint brackets are used; or, you may want an additional row of tiebars for extra strength. Tiebars must be specified individually – see ordering chart.

Tiebar Ordering Chart (Including Bolts)

Tiebar Length		Model No.
in.	mm	
15	380	83-101-15
20	510	83-101-20
26	660	83-101-26
30	760	83-101-30
35	890	83-101-35
40	1015	83-101-40
50	1270	83-101-50
60	1525	83-101-60
70	1780	83-101-70

How to Order

One floor restraint bracket (no bolts)

No. 83-103-01 (for TMC 11 and 12 Series posts)

No. 83-103-02 (for TMC 13 and 14 Series posts)

No. 83-103-03 (for TMC 63-500 Series posts)

Breadboard Leveler

As an option on 2 in. (50 mm) thick breadboards with 1/8 in. (3 mm) or 3/16 in. (5 mm) skins, TMC provides a breadboard leveler mechanism (see page 36). The leveler consists of a threaded sleeve bonded into the top, a bushing leveler, and a locknut. An M6 or 1/4-20 bolt may then be used to fasten the breadboard to another top. The leveler is adjusted and locked with a simple Allen wrench.

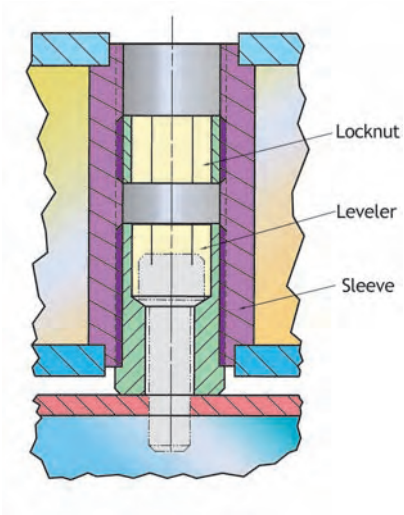

How to Order

Specify the number of levelers required at the end of the breadboard model number suffix. For instance, if 4 levelers are desired, 77-119-02 becomes 77-119-024.

GMP SA Siège principale: Avenue des Baumettes 17 CH-1020 Renens +41 21 633 21 21 Fax. +41 21 633 21 29 info@gmp.ch
GMP SA Büro Zürich: Dübendorfstrasse 11a CH-8117 Fällanden +41 44 825 34 00 Fax. +41 44 825 34 01 so@gmp.ch

Custom Configurations

TMC's complete manufacturing facility can readily provide custom configurations to meet your special requirements.



Special Materials

Tables made of any commercially available metallic materials are readily manufactured by TMC. Aluminum, non-ferromagnetic 300 series stainless steel, and thermally stable Super Invar are among the most frequent requests.

Special Through-Holes and Ports

Our multiple new 2,000-watt laser machining centers coupled with our capacity to punch, drill, shear, form, and weld steel makes inclusion of custom hole patterns readily available. Common patterns include notches, rectangular through-holes, laser ports, and threaded bosses.

Laser Ports

All TMC optical tops can be supplied with a laser port, as noted in the laser port and hole pattern suffix chart. The laser port is a 1 7/8 in. (47 mm) diameter stainless steel tube running through the table, bonded to the top and bottom skins.

Provisions for mounting a laser shelf underneath the table top are included with this option.

See drawing and chart below.

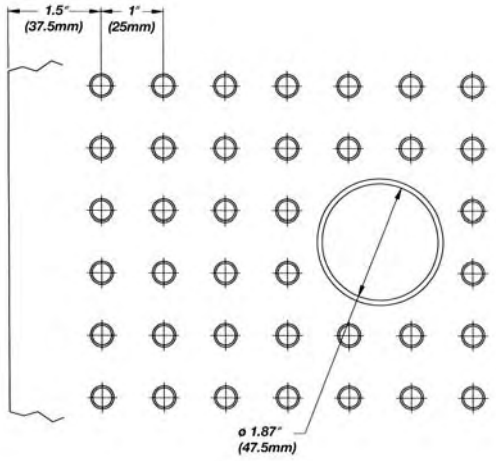

Suffix Chart
Hole Patterns/Laser Ports

Suffix	Hole Pattern-Threads	Double Density	Laser Port
00R	No Holes	no	no
01R	1" centers - 1/4-20	no	yes
02R	1" centers - 1/4-20	no	no
11R	25 mm centers - M6	no	yes
12R	25 mm centers - M6	no	no
01DR	1" staggered centers - 1/4-20	yes	yes
02DR	1" staggered centers - 1/4-20	yes	no
11DR	25 mm staggered centers - M6	yes	yes
12DR	25 mm staggered centers - M6	yes	no

Joined Tables

By welding a precision ground and aligned joiner plate system to the table skins, TMC can provide a rigid coupling between optical tables. In addition to tables coupled end-to-end, we can easily join them in "L" or "T" shapes. (Even relatively small tables are sometimes made in sections to allow rigging in elevators, etc.)

In addition, we can provide configurations with two working heights on one table by coupling tables of differing thicknesses.

All joined tables are assembled and tested in our factory, shipped separately, and reassembled on site.

The tables can, at any time, be separated and supported individually or rejoined.





GMP SA Siège principale: Avenue des Baumettes 17 CH-1020 Renens +41 21 633 21 21 Fax. +41 21 633 21 29 info@gmp.ch
GMP SA Büro Zürich: Dübendorfstrasse 11a CH-8117 Fällanden +41 44 825 34 00 Fax. +41 44 825 34 01 so@gmp.ch

Precision-machined steel mating joiner plates are aligned and welded to multiple tops







This eight-piece CleanTop® Optical Table System is installed at the Max Planck Institute in Heidelberg, Germany. The system may be configured as one entire assembly or smaller assemblies of one or more table units. The entire system is installed on a STACIS® Active Piezoelectric Vibration Cancellation System.

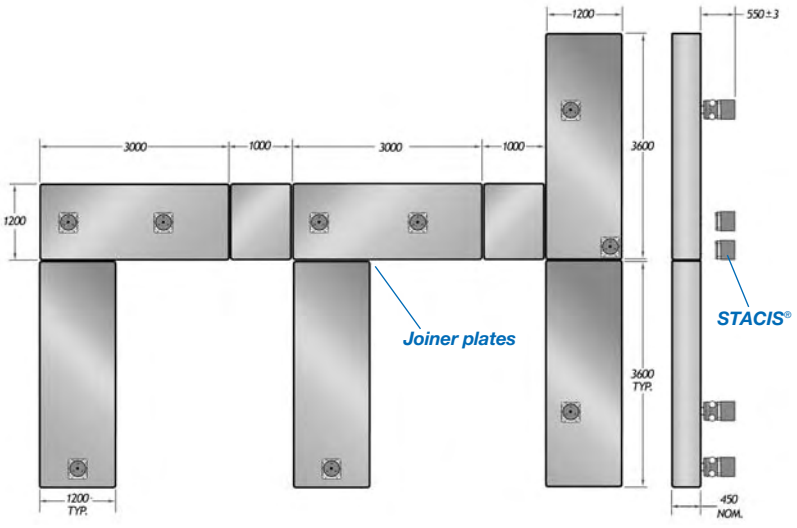



NASA Goddard's Advanced Interferometer and Metrology Lab (AIM) incorporates two 5' x 16' x 2' Invar CleanTop® II Optical Tops, each supported on a six-mount STACIS® active piezoelectric vibration cancellation system.