ALMATEC®

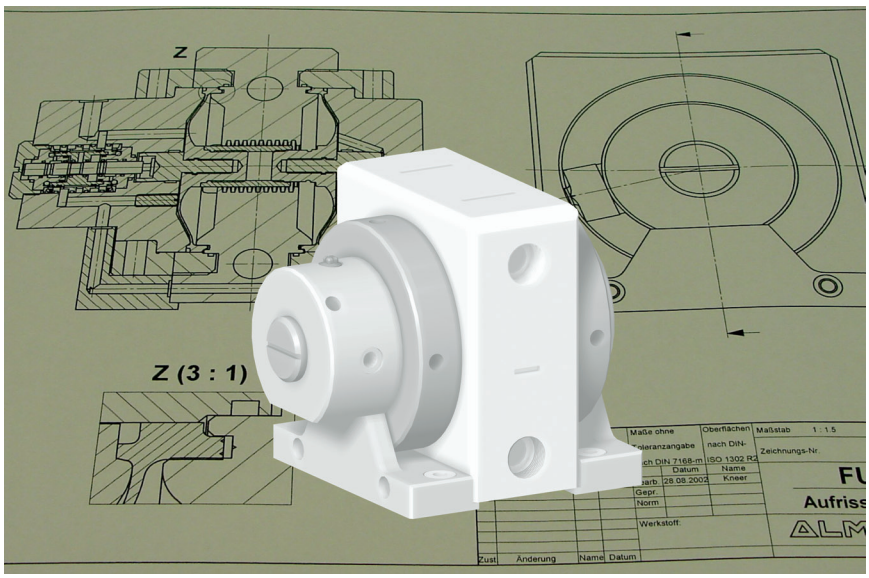

FUTUR

Special Pumps for the Semiconductor Industry

"the 4th generation"

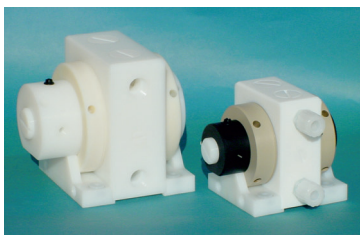

ALMATEC®

FUTUR AT A GLANCE

- four materials (T, H, E, S) for the different applications
- no metal at all (T, H, E)
- temperature range up to 200 °C (H)
- patented, contactless cascade sealing between the product chambers
- no O-ring sealing in wetted areas
- straight-through flow pattern, only one wetted housing part
- air control system PERSWING P®, no lubrication or maintenance
- internal air flow
- diaphragms without plates and gaskets, optimized diaphragm geometry
- cylinder valves sealing the full area
- compact, simple design with few parts, very low space requirement
- machined from solid blocks
- easy to dismantle and assemble
- no fixing elements, such as tie rods, nuts, or clamps
- separate pulsation damper available for all materials and sizes
- diaphragm and/or stroke sensors can be retrofitted easily
- low noise level
- up to 2 year of warranty, even on wear parts

HIGHLIGHTS OF DESIGN

The pumps of the FUTUR series are self-priming pneumatic diaphragm pumps which may run dry. The liquid flows straight through the product chambers of the center housing, while the air control system and the air chambers are located in the side housing. This design ensures that only one part of the housing comes in contact with the liquid, reduces the number of flow bends to only two, minimizes the surface area, no sliding parts in the product chambers, and makes it possible to dispense with gaskets. There are no fastening elements, such as tie rods, clamps, or nuts. The patented, contactless cascade sealing between the product chambers is a major structural element. For it excludes the problem of sliding surfaces in the liquid with respect to particles generation and dry running sensitivity.

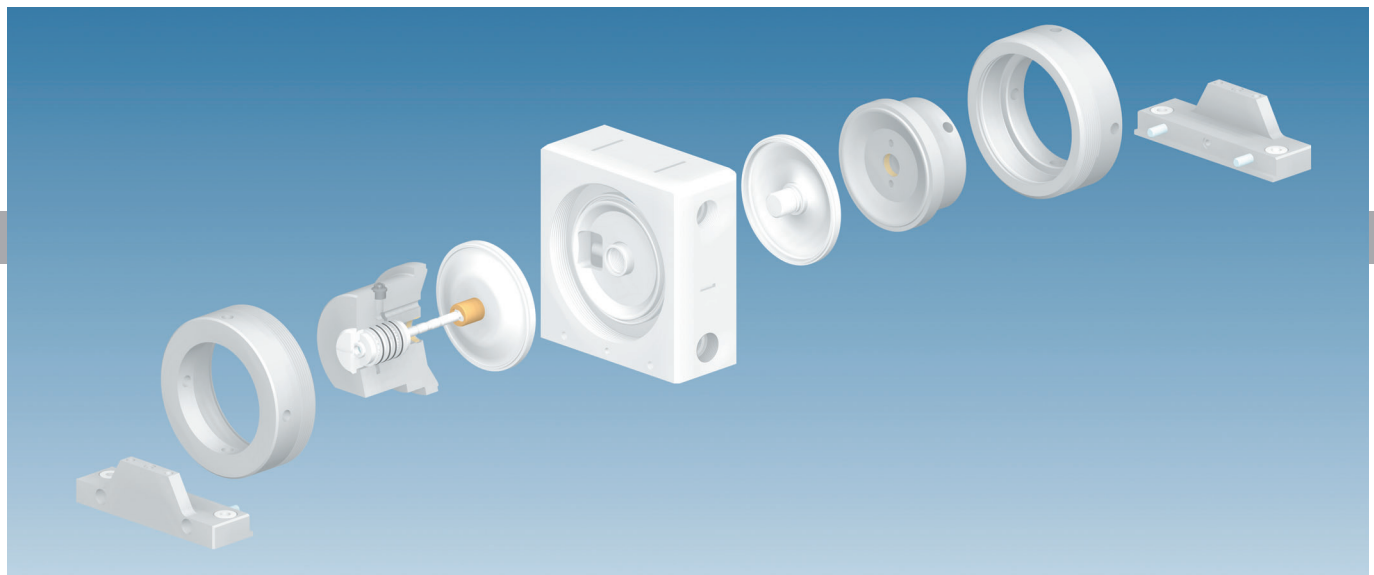

Four Models for all Applications

Model: FUTUR T
Materials: Center housing PTFE-TFM
Side housings UPPE
Pump sizes: 10, 20, 50, 100
Liquids: Acids and caustics

When delivering acids and caustics, the corrosion resistance is of most importance. So the strong center housing is made of special PTFE-TFM. Compared to the normal PTFE it has a higher tensile strength and surface density. Parts made of this material are smooth and free of pores, which the particles generation reduces. The pumps are absolute metal-free and can be used for temperature ranges up to 100 °C.

Model: FUTUR H
Materials: Center housing PTFE-TFM
Side housings PTFE conductive
Pump sizes: 10, 20
Liquids: Hot applications
with acids and caustics

For hot applications with acids and caustics the FUTUR H is used. The side housings are made of PTFE conductive. The temperature limit is 200 °C.

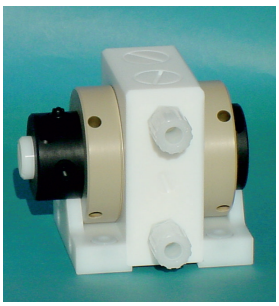

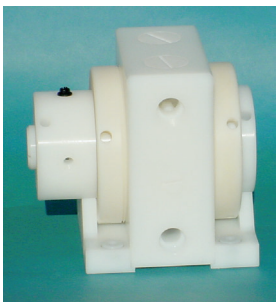

FUTUR 20 H (left) and FUTUR 50 E

Model: FUTUR E
Materials: Center housing UPPE
Side housings UPPE
Pump sizes: 20, 50, 100, 200
Liquids: Slurries

A pump for slurries has to be abrasion resistant. Here the material UPPE (ultra-pure polyethylene) is best suited. It is a variation of the ultra-high molecular weight high-density polyethylene. It has a very high abrasion resistance (higher than steel), a good impact value, and withstand the entering of slurry particles. The good chemical properties allow handling both, basic and acidic slurries. The FUTUR E is metal-free too; the maximum permitted temperature of the liquid is 70 °C.

Model: FUTUR S
Materials: Center housing SS 316 L
Side housings PTFE conductive
Pump sizes: 20, 50
Liquids: Solvents (strippers)

Pumps for solvents, mixtures of solvents, and strippers are made of stainless steel (SS 316 L). For the FUTUR S only stainless steel with extremely low carbon content is used. The housing parts are machined from a solid block of rolled steel and polished afterwards, the only possibility to secure a pore-free surface. The pumps can be used for temperature ranges up to 130 °C.

More Features



FUTUR pumps have a compact, simple design with few parts only. The housing parts are machined from solid blocks, the basis for a long life time.

Suction and discharge ports are located at the front, thus simplifying installation in confined spaces. Compared with the predecessor series there is no change of the port sizes and location. The location of the air connection and the muffler is clearly defined.

In the wetted area of the FUTUR pumps there is no O-ring sealing. The pumps can be easily controlled via the air volume.

Pulsation Dampers and Special Equipment

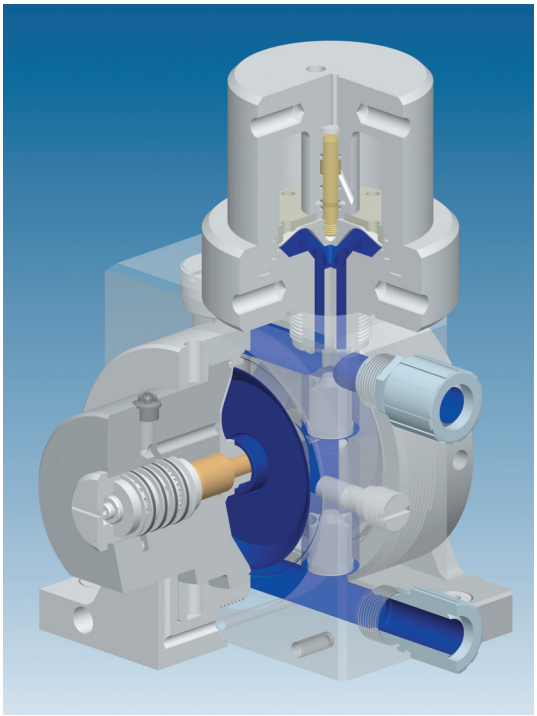

Due to their design, oscillating displacement pumps deliver a pulsating flow. This pulsation is considerably reduced by the appropriately designed air distribution channels and chambers of the Futur series, as well as by the cascade seal, also on the suction side. Pulsation dampers (type D) of the same design without tie rods are available for all pump materials and sizes, if the remaining pulsation on the discharge side is unacceptable for a specific application. The installation of a pulsation damper is most simple. It is screwed on top of the pump. Therefore a separate pulsation damper can be retrofitted at any time, even on installed pumps, without changing the product connections.

Futur pneumatic diaphragm pumps can be fitted with a sensor installed in the muffler to monitor the diaphragms and a pneumatical stroke counting. A pressure transmitter registers the changes in pressure within the air chamber behind the diaphragm on the left hand.

Suction and discharge ports of the Futur pumps made of plastic can optionally be equipped with Flaretek® connectors for the piping system. For the Futur S VCR-connectors made of stainless steel are available.

Diaphragms and Cylinder Valves

Neither piston plates nor gaskets are required for the diaphragms made of PTFE (Futur T, H, S) respectively UPPE (Futur E). The well-balanced geometry leads to a extremely long life time. The wetted surface is small, even, and without any pockets in which particles may accumulate.
In this respect, the Futur diaphragms differ considerably from sensitive bellows with their large surface.

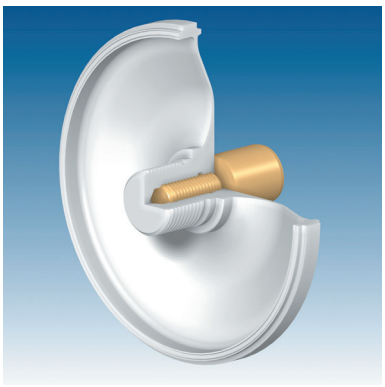

The pumps are equipped with the tried-and-tested cylinder valves. These valves seal a large area and therefore ensure very good dry priming. They close gently and evenly and permit accurate delivery. In contrast to the Futur many competition pumps are equipped with ball valves. Ball valves form a linear seal with the valve seat. Moreover the closing process can be delayed by twist motions of the ball. The result is an irregular operation.

The PERSWING P® Air Control System

The main piston is accurately switched by the built-in air control system PERSWING P® (metal-free of course!) with “drag-system”. The pilot piston is decoupled from the diaphragm stroke and is operated at the end of the stroke only like a indirect air control. Analog, depending on the way of the pilot piston the way of the main piston and the dead space on the air side is reduced. There are no external controllers, limit switches, and wiring (metal!). The patented PERSWING P® air control system does not require maintenance, operates without lubrication, and is characterized by a low noise level.

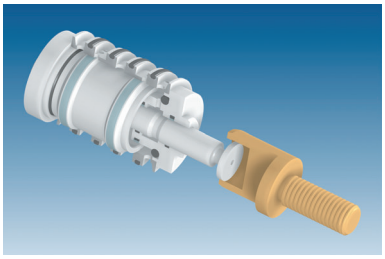

Technical Data

Data independent of the pump model					
Pump size	**10**	**20**	**50**	**100**	**200**
Nominal port size (NPT)	3/8“	1/2“	1“	1 1/4“	1 1/2“
Air connection (NPT)	1/4“	1/4“	1/4“	1/4“	3/8“
Air classification acc. to ISO-DIS 8573-1:					
solid content, class	2	2	2	2	2
water content, class	3	3	3	3	3
oil content, class	3	3	3	3	3
Suction head, dry (mWC)	1	2,5	3,5	4	4,5
Suction head, wet (mWC)	8	9	9	9	9
Max. driving pressure (bar)	6	6	6	6	6

Max. permitted operating temperature (°C)				
Pump model	**Futur H**	**Futur T**	**Futur E**	**Futur S**
at max. 6 bar	100	100	70	130
at max. 5 bar	130	110	70	130
at max. 4 bar	150	120	70	130
at max. 3 bar	180	130	70	130
at max. 2 bar	200	130	70	130

Dimensions					
Pump size	**10**	**20**	**50**	**100**	**200**
Dimensions for pump: length/width/height (mm)					
for pump models H, T, E	185/114/130	201/150/167	246/200/222	303/260/265	374/330/345
for pump models S	-	201/124/153	246/170/205	-	-
Dimensions pump with damper: length/width/height (mm)					
for pump models H, T, E	185/114/245	201/150/282	246/200/354	303/260/428	374/330/577
for pump models S	-	201/124/265	246/170/327	-	-

Performance Range

The specified performance data are warranted by ALMATEC in accordance with DIN 1944, Stage III as far as applicable. The data refer to water.

Futur 10

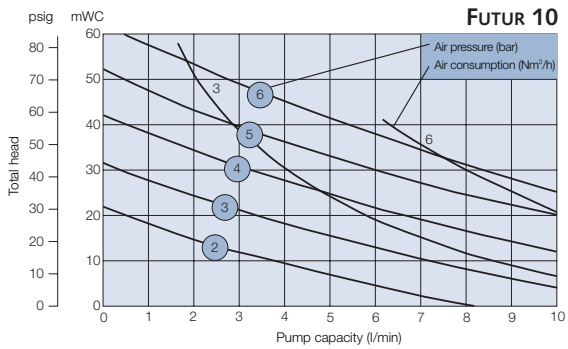

Futur 20

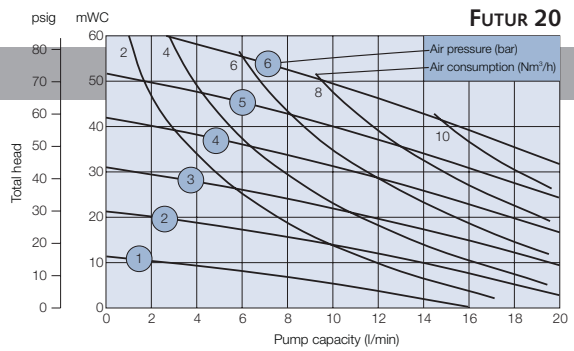

Futur 50

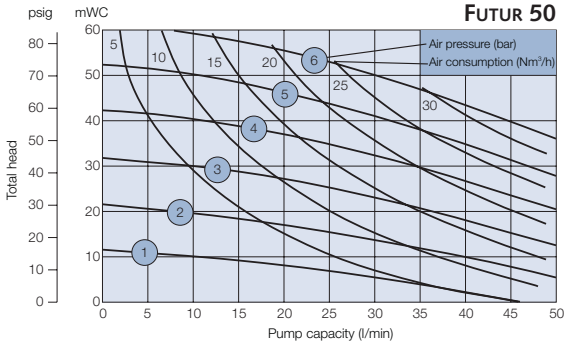

Futur 100

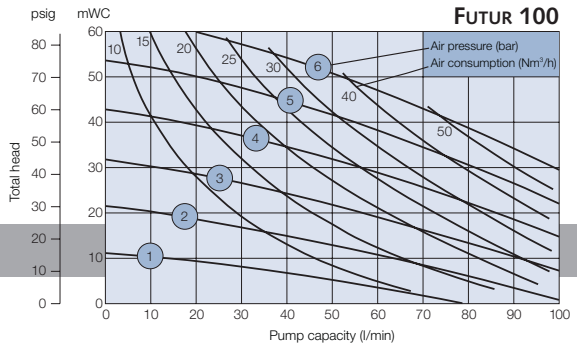

Futur 200

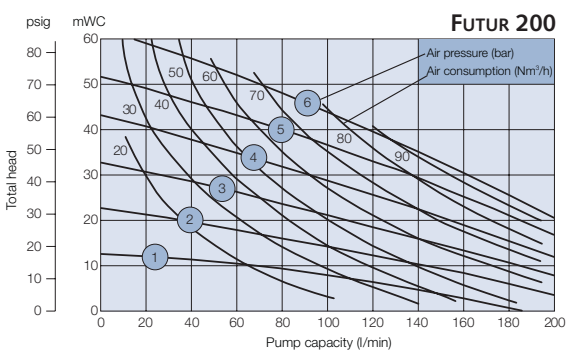

Clean-Room Production



All pumps of the Futur series are cleaned several times, assembled, and tested in a class 100 clean-room line.

Warranty

For all pumps of the Futur series (T, H, E, S) ALMATEC Maschinenbau GmbH grants a warranty to a faultless function for the period of 24 months, respectively 12 months in case of handling abrasive liquids, after shipment without stroke limitation, within the specified limits for capacity, pressure, and temperature, with original connections and pipes of sufficient nominal size. Wear parts are included as well (extract from the warranty of the Futur series; the detailed warranty conditions are available on request).

The Specialists for Pneumatic Diaphragm Pumps





TECHNIQUES DES FLUIDES
7, Rue de la Fosse aux Loups
95100 ARGENTEUIL

Tél. : 01 34 11 13 73
Fax : 01 34 11 96 35

www.techniquesfluides.fr

Subject to change without notice, 03/03