NOTICE

THIS DRAWING IS THE PROPERTY OF QUALITROL/QUALITROL AKM AND IS LOANED ONLY ON THE CONDITION THAT IT WILL BE USED TO FACILITATE THE PURPOSE FOR WHICH INTENDED AND NOT BE REPRODUCED, COPIED OR OTHERWISE DISPOSED OF, AND IS NOT TO BE USED IN WHOLE OR PART FOR FURNISHING INFORMATION RELATIVE TO THE MAKING OF DRAWINGS, PARTS APPARATUS OR PARTS THEREOF, EXCEPT BY WRITTEN ORDER FROM QUALITROL/QUALITROL AKM.

MODEL NO. 46900-10-CS43621

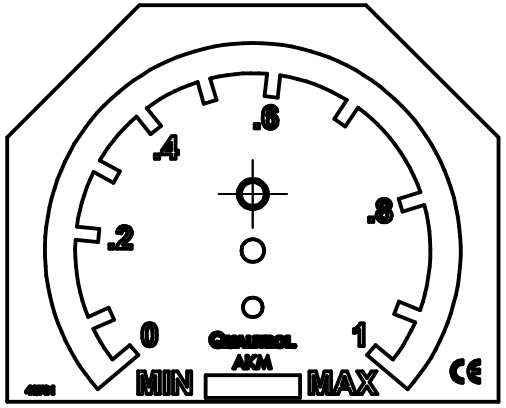

DIAL VIEW

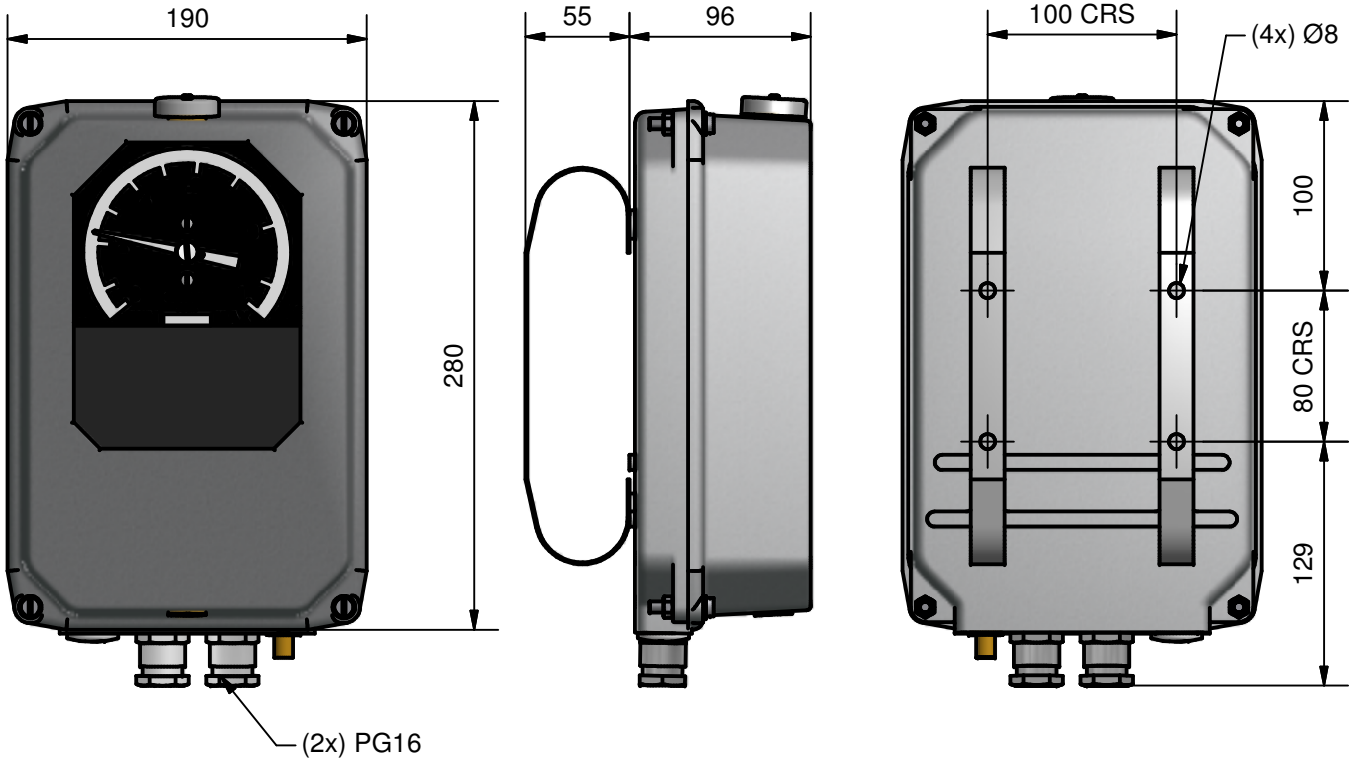

Style	46900
Number of Switches	4
Dial	46731
Capillary Length	10
Switch Type	MBO
Remote Indication	None
Protection Class	IP54
Case Finish	Standard
Captive Hardware	YES
Lens Material	Polycarbonate
Label	46723
Mounting	STD
Measuring Accuracy	STD
Switching Differential	STD
Cable Entry	PG16
Special Feature	4 Switches

SPECIAL:
Number of Switches: 4

SERIES 69

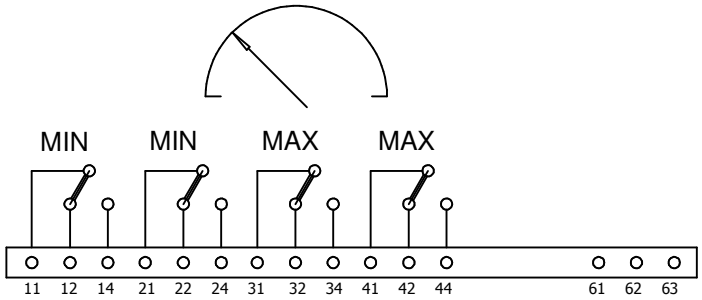

LET	DATE	ALTERATION	C.N.
-	24/04/04	RELEASE	10572

QUALITROL® COMPANY LLC AKM

Qualitrol and Qualitrol AKM are ISO 9001 system certified companies. Information subject to change without notice.

AB Qualitrol AKM
Flygfältsgatan 6C
SE - 128 30 Skarpnäck
Sweden
Phone: +46 8 447 54 50
Fax: +46 8 604 68 10

TITLE: Oil Level Remote Indicator

MODEL NO. 46900-10-CS43621