12038VA (E-Type*)

DC Axial Fan

120□X38L



General Specifications

Motor Protection	Auto Restart / Polarity Protection
Insulation Resistance	10MΩ or over with a DC500V Megger
Dielectric Withstand Voltage	: AC700V 1s
	: M, N, P, Q Class : − 10℃ ～ +70℃ (Operating)
Allowable Ambient Temperature Range	R Class : −10℃～+60℃ (Operating)
	: −40℃～+70℃ (Storage)
	non-condensing environment

Expected Life ※Failure Rate: 10% (L10 Life)

60℃ 40,000 (Hours)

Outline

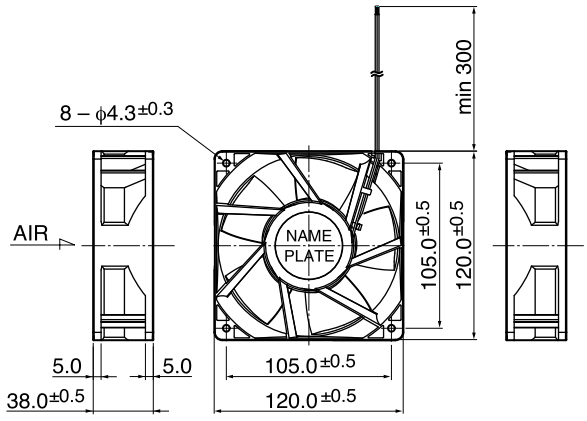

* Outline is E (Flange) type.

Panel Out-cuts

(Inlet Side) (Outlet Side)

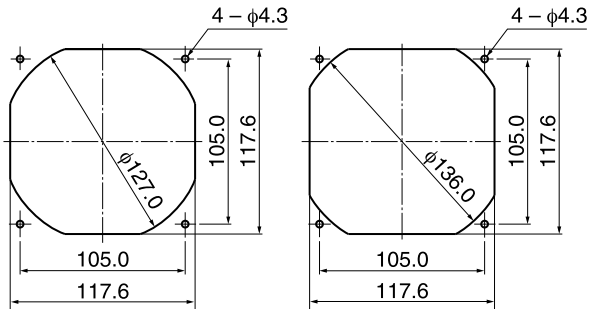

Characteristic Curves

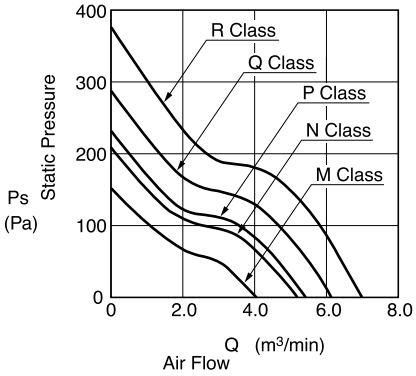

Material

Casing	: Plastic (Black) UL94V-0
Impeller	: Plastic (Black) UL94V-0
Bearing	: Ball Bearing
Lead Wire	: UL10368 AWG24 +: Red, −: Black or UL3443 AWG24

Customize service for IP compatible type and Oil-proof type is available for this item.
Please contact to our sales representative for more detail.

*(0-Type for 48 volt fan)

Specifications

Model**	Product Number	Rating Voltage (V)	Operating Voltage (V)	Current (A)*1	Input Power (W)*1	Speed (min-1)*1	Max Air Flow (m^3/min)*1	Max Air Flow (CFM)*1	Max Static Pressure (Pa)	Max Static Pressure (In H2O)*1	Noise (dB)*1	Mass (g)
12038VA-12P-AAE-	0	12	10.8 ~ 13.2	1.60	19.20	5000	5.35	188.9	235.0	0.94	60.0	
12038VA-12Q-AAE-	0	12	10.8 ~ 13.2	2.25	27.00	5700	6.11	215.7	287.0	1.15	63.0	
12038VA-12R-AAE-	0	12	10.8 ~ 12.6	3.20	38.40	6400	6.90	243.6	370.0	1.49	66.0	
12038VA-24M-AAE-	0	24	18.0 ~ 27.6	0.45	10.80	3800	4.00	141.2	150.0	0.60	53.0	
12038VA-24N-AAE	0	24	18.0 ~ 27.6	0.74	17.76	4700	5.17	182.6	207.0	0.83	59.0	
12038VA-24P-AAE-	0	24	18.0 ~ 27.6	0.74	17.76	5000	5.35	188.9	235.0	0.94	60.0	370
12038VA-24Q-AAE-	0	24	18.0 ~ 27.6	1.04	24.96	5700	6.11	215.7	287.0	1.15	63.0	
12038VA-24R-AAE-	0	24	18.0 ~ 27.6	1.48	35.52	6400	6.90	243.6	370.0	1.49	66.0	
12038VA-48P-AA-	00	48	40.0 ~ 52.8	0.40	19.20	5000	5.35	188.9	235.0	0.94	59.5	
12038VA-48Q-AA-	00	48	40.0 ~ 52.8	0.55	26.40	5700	6.11	215.7	287.0	1.15	62.0	
12038VA-48R-AA-	00	48	40.0 ~ 52.8	0.75	36.00	6400	6.90	243.6	370.0	1.49	64.0	

Rotation: Clockwise as seen from the label side
Airflow Outlet: Label side

**Flange casing also available

*1: Average Values in Free Air

PWM | 12038VA-24R (120 X 38)

Pulse Width Modulation Axial Cooling Fan

General Specifications

Motor Type: DC Brushless Motor

Motor Protection: Auto Restart/Polarity Protection

Motor withstands reverse connection for positive and negative leads.

Insulation Resistance:
10M Ω or over with a DC500V Megger

Dielectric Withstand Voltage:
AC 700V 1s or 500V 1min

Allowable Ambient Temperature Range:

-10°C ~ +60°C (Operating)
-40°C ~ +60°C (Storage)
(non-condensing environment)

Characteristics Curves

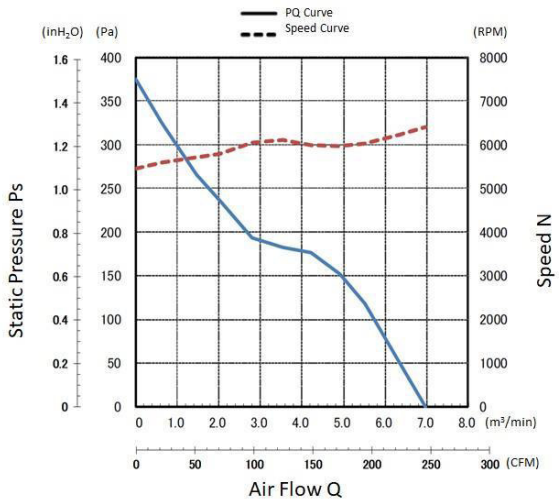

PWM Benefits & Applications

PWM Benefits

- Increased Life Expectancy
- Energy Saving
- Lower Vibration
- Lower Noise
- Current Spike Prevention

PWM Applications

- Routers
- Switches
- Storage
- Data Centers
- Optical Repeaters
- Broadcast Equipment
- Inverters
- UPS
- Battery Chargers
- Fuel Cells
- Industrial Power Supplies
- Welders
- Plasma Cutters
- Instrumentation
- Test Equipment
- Enclosures and more

- Customized fan performances at multiple operating points.
- Peak efficiency resulting in lower total ownership costs.
- Cost effective and better reliability.

Life Expectancy L10

60°C 40,000 Hours

Specifications

MODEL	Rated Voltage	Operating Voltage	Current		Input Power		Speed	Max. Air Flow		Max. Static Pressure		Noise	Mass
			Avg	Max	Avg	Max							
	(V)	(V)	(A)*1	(A)*1	(W)*1	(W)*1	(min^{-1})*1	(CFM)	(m^3/min)	(inH_2O)	(Pa)	(dB)*1	(g)
12038VA-24R-FU-06	24	18.0 ~ 27.6	1.48	1.77	35.52	42.48	6400	243.7	6.90	1.49	370	64.0	370

*1: Values in Free Air

MinebeaMitsumi
Passion to Create Value through Difference

PWM Specifications

PWM CONTROL
●CONNECTION

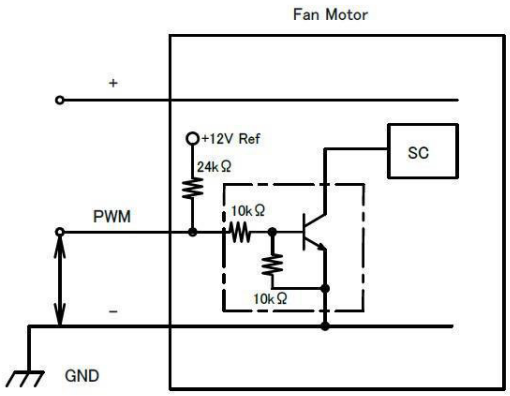

1. PWM Control

Vst = Low Level (0V～0.4V)	→	Stop (On Duty 0%)
Vst = High Level	→	Full Speed (On Duty 100%)
Vst = Open	→	Full Speed

2. PWM Duty & PWM Input Pulse

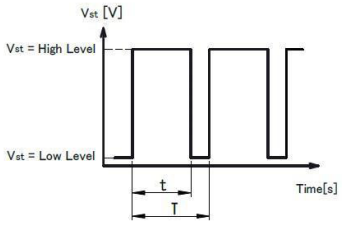

PWM Duty means that a ration of high level time (t)/PWM Input Pulse(T).)

(t/T) × 100 : On Duty 0% ～ 100%

PWM Frequency f = 25[kHz]

TACHO Specifications

TACHO SIGNAL
1. OUTPUT CIRCUIT : OPEN COLLECTOR
2. SPECIFICATION
Ta=25°C
Absolute Maximum Ratings at Ta=25°C
V_{CE} max : +30V
Ic max : 5mA [V_{CE}(sat)max = 0.5V]

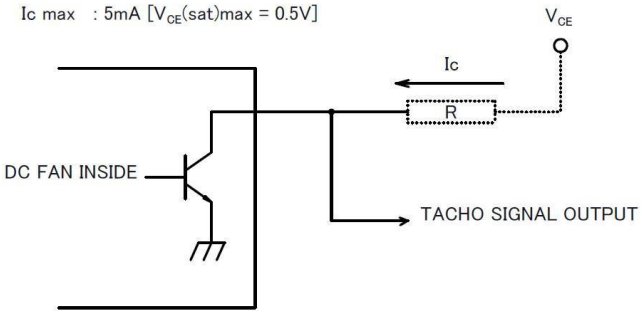

TACHO SIGNAL CIRCUIT

PWM Characteristics Curve

Reference PWM Duty VS Speed
Conditions: at rating Voltage, Vst=5.0V, f=25kHz, Ta=25°C

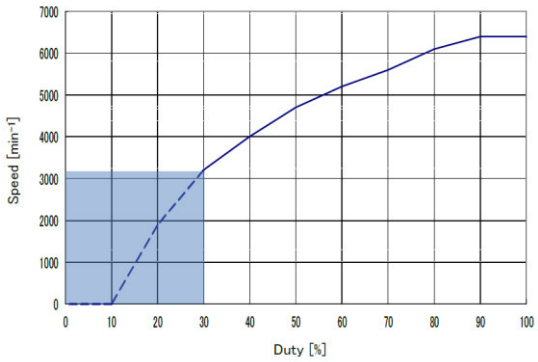

3. The condition for PWM control are as follows.

- When you use this under PWM control, always be sure the motor's operation under practical mounting state.
  Fan motor may not start up caused by PWM control at very low speed condition.
- To run at Rating Voltage.
- Please use the start with Duty 30% or more at 25kHz.
  [At rated voltage input, Ambient temperature 25°C]

3. OUTPUT WAVEFORM : AT RATED VOLTAGE
4. OUTPUT SIGNAL VOLTAGE
3-1 Case-1

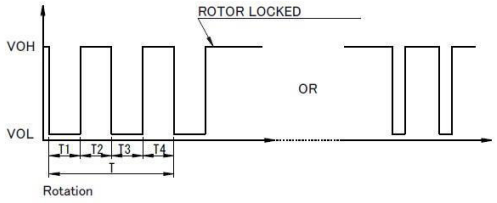

3-2 Case-2

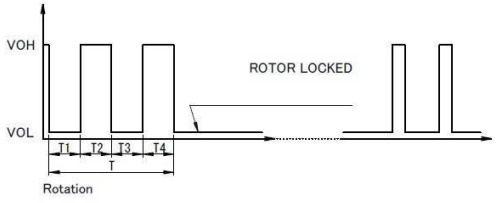

1) When the rotor is locked at VOH position of signal, signal keeps VOH position or signal becomes to VOL position for a few seconds at any time of the auto-restart motion.

2) When the rotor is locked at VOL position of signal, signal keeps VOL position or signal becomes to VOH position for a few seconds at any time of the auto-restart motion.

3) T=T1+T2+T3+T4=60／m=1 rotation
m : min^{-1}
Tach Duty Cycle=50%±10%

Panel Cut-Outs

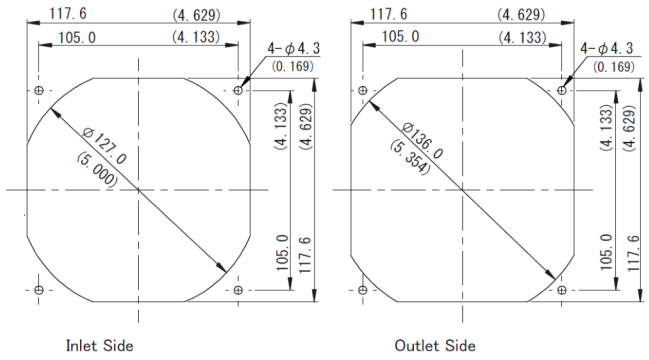

Unit: mm (inch)

Materials

Casing : Plastic (Black UL94V-0)

Impeller : Plastic (Black UL94V-0)

Bearing : Ball Bearing

Lead Wire : UL3443 AWG24

(+) : Red (-) : Black

PWM : Brown Tach : White

Outline

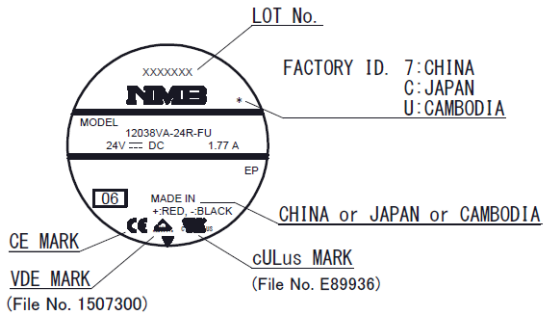

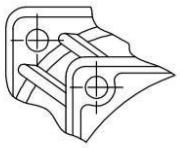

FLANGE TYPE

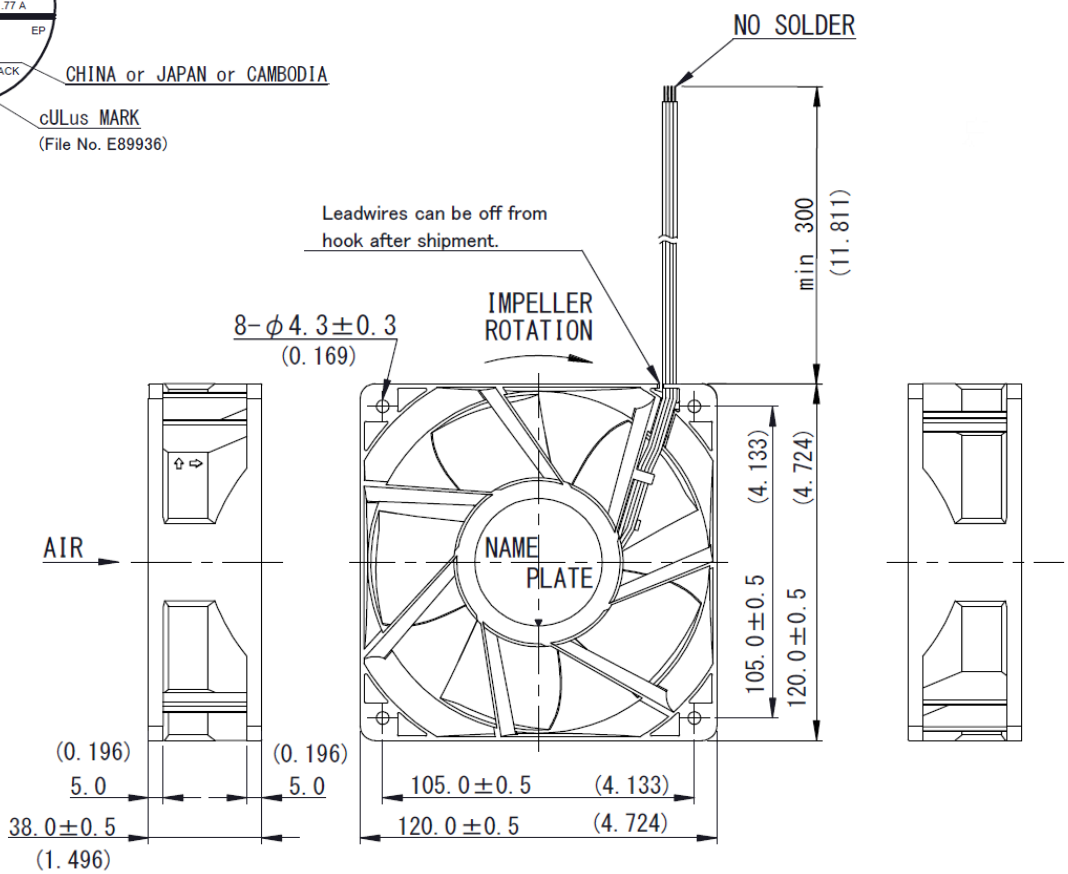

Unit: mm (inch)

MinebeaMitsumi
Passion to Create Value through Difference

General Specifications

Motor Protection:
Auto Restart/Polarity Protection

Insulation Resistance:
10M Ω or over with a DC500V Megger

Dielectric Withstand Voltage: AC 700V 1s

Allowable Ambient Temperature Range:
-10°C ~ +60°C (Operating)
-40°C ~ +60°C (Storage)

IP Code: IP69K

Characteristic Curves

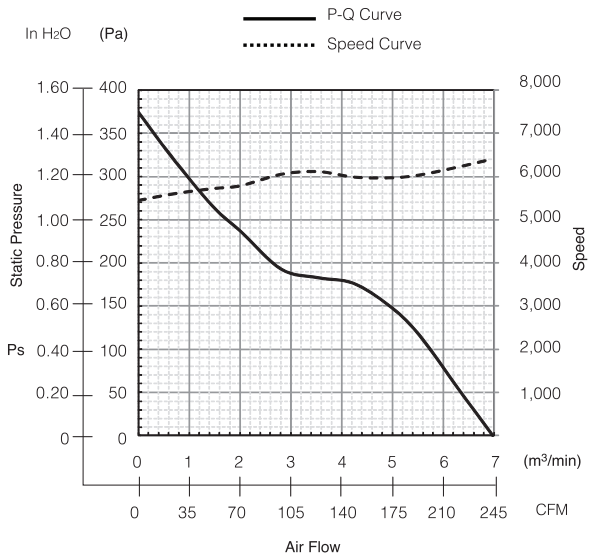

Expected Life

25°C 100,000 Hours (L10)

Material

Casing : Plastic (Black) UL94V-0
Impeller : Plastic (Black) UL94V-0
Bearing : Ball Bearing
Lead Wire : UL10368, AWG22, +Red, -Black

Outline

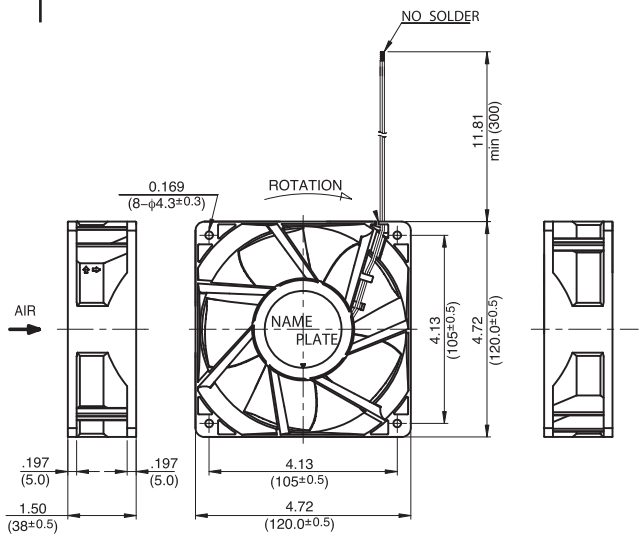

Panel Cut-Outs

Units: inch (mm)

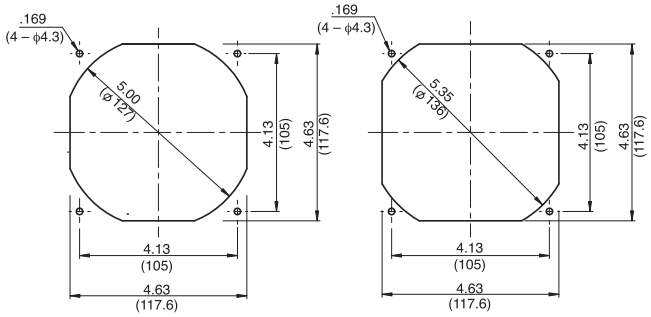

Specifications

MODEL	Rated Voltage	Operating Voltage	Current	Input Power	Speed	Max. Air Flow		Max. Static Pressure		Noise	Mass
	(V)	(V)	(A)*1	(W)*1	(min-1)*1	CFM*1	(m3/min)*1	in H2O	(Pa)*1	(dB)*1	(g)
12038VA-24R-GA-00	24	18.0 ~ 27.6	1.48	35.5	6400	243.67	6.9	1.48	370	64.0	370

Rotation: Clockwise Airflow Outlet: Air Out Over Struts *1: Average Values in Free Air Note: PWM/Locked Rotor/Tach Available