OMAL® AUTOMATION

EMPOWERED PERFORMANCE

KRAVEN
CATALOGUE

www.omal.com

PRODUCTS

EMPOWERED PERFORMANCE

KRAVEN

CATALOGUE

www.omal.com

180216

KRAVEN

VALVOLE A FARFALLA KRAVEN · INDICE

Pag:

- **VALVOLE A FARFALLA KRAVEN**

- Caratteristiche generali valvole a farfalla **875-876-877** & **885-886-887 KRAVEN** 12

- **ITEM 875-876-877 KRAVEN** **20**
  Valvola a farfalla in ghisa per montaggio tra flange tipo "Wafer"

- **ITEM 885-886-887 KRAVEN** **34**
  Valvola a farfalla in ghisa per montaggio tra flange tipo "Lug"

- Certificati valvole a farfalla KRAVEN 48

KRAVEN BUTTERFLY VALVES · INDEX

Pag:

- **BUTTERFLY VALVES KRAVEN**

- *General features butterfly valves* ***875-876-877*** *&* ***885-886-887 KRAVEN*** 12

- ***ITEM 875-876-877 KRAVEN*** **20**
  Cast iron butterfly valve for mounting between flanges, "Wafer" type

- ***ITEM 885-886-887 KRAVEN*** **34**
  Cast iron butterfly valve for mounting between flanges, "Lug" type

- *KRAVEN butterfly valves certificates* 48

ITEMS 875-876-877 & 885-886-887 KRAVEN

VALVOLE A FARFALLA IN GHISA *DUCTIL IRON BUTTERFLY VALVES*

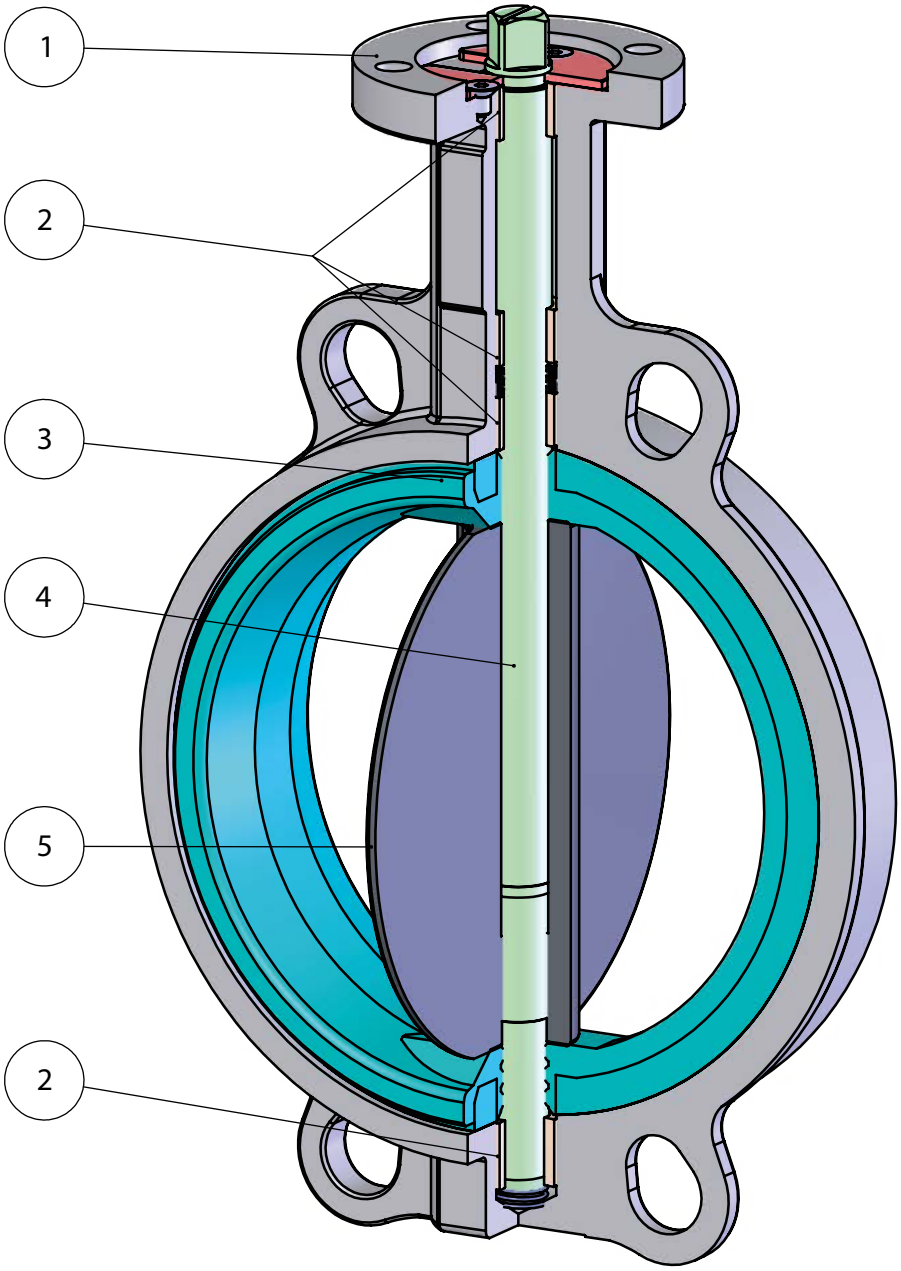

FEATURES & BENEFITS

1	Testa valvola normalizzata EN ISO 5211 *EN ISO 5211 top mounting*	Facilità di accoppiamento con qualsiasi azionamento. *Easy coupling with every kind of drives.*
2	Quattro boccole guida sull'albero *Four guiding bushings on the shaft*	Si ha un perfetto allineamento dell'albero sul corpo e si evitano oscillazioni anche con alte pressioni. *It grants a perfect alignment of the shaft on the body and prevents oscillations even with high pressure.*
		Si riduce l'attrito tra albero e corpo. *Less friction between the shaft and body.*
3	Guarnizione vulcanizzata su anello rigido *Vulcanized liner on rigid ring*	La guarnizione subisce minor deformazione durante l'utilizzo. *Less deformation of the liner.*
		Viene facilitato il montaggio/smontaggio della tenuta per eventuali manutenzioni. *Easy assembly / disassembly of the liner for maintenance.*
		La guarnizione non subisce deformazione tra le flange durante l'assemblaggio . *No deformation of the liner between the flanges during assembly.*
		Maggior accuratezza dimensionale durante la fase di stampaggio. *Greater dimensional accuracy during the injection/molding.*
4	Albero passante *Shaft 1 piece without fixing components*	Viene facilitato il montaggio/smontaggio della lente per eventuali manutenzioni. *Easy assembly / disassembly of the disc for maintenance.*
5	Circonferenza della lente con finitura lappata *Lapped surface of the disc's circumference*	Miglior tenuta e minor usura della guarnizione. *Better tightness and less wear of the liner.*
		Si ha una coppia minore grazie al minor attrito tra disco e guarnizione. *Lower torque due to less friction between the disc and liner.*
	Vasta gamma di materiali *Wide range of LINER materials*	Possibilità di utilizzo su diverse applicazioni. *Various applications possibility.*
	Certificato PED *PED Certificate*	Piena conformità alle norme di sicurezza europee per i dispositivi in pressione. *Full compliance with European Safety Standards for Pressure Equipment.*
	Certificato ATEX *ATEX Certificate*	Ne consente l'installazione in presenza di ambiente potenzialmente esplosivo. *Installation is allowed in a potential explosive environment.*

VALVOLA A FARFALLA KRAVEN IN GHISA
KRAVEN DUCTIL IRON BUTTERFLY VALVE

CARATTERISTICHE GENERALI:

Le valvole a farfalla OMAL, disponibili nelle versioni wafer e lug nelle misure da DN40 a DN300, sono studiate e realizzate per far fronte alla maggioranza delle applicazioni in tutti i settori dell'industria

- Requisiti generali in accordo UNI EN593.
- Scartamenti normalizzati EN 558 serie 20.
- Tenuta secondo EN 12266-1 rate A con una pressione differenziale di 16 bar.
- Guarnizione integrale semirigida ottenuta mediante vulcanizzazione dello strato di elastomero su un anello rigido di supporto.
- Geometria della guarnizione ottimizzata per una perfetta aderenza al corpo valvola e tenuta sulle flange senza ulteriori elementi aggiuntivi. Il serraggio delle flange non influisce sulla coppia di azionamento né sul funzionamento della valvola stessa.
- Finitura della farfalla con bordi lappati che permette di ottimizzare la tenuta, di ridurre la coppia di manovra e di diminuire sensibilmente l'usura della guarnizione.
- Bussole guida sull'albero.
- Accoppiamento stelo-lente con millerighe per ridurre i giochi.
- Accoppiamento con qualsiasi azionamento (pneumatico, elettrico, manuale, ecc..) facilitato dal collo valvola con piano normalizzato EN ISO 5211.
- Tutti i particolari sono adeguatamente trattati per garantire piena compatibilità con la maggior parte dei fluidi utilizzati nei processi industriali.

I dati e le caratteristiche di questo catalogo potrebbero essere variati a scopo di miglioramento tecnico anche senza preavviso e pertanto, non sono vincolanti ai fini della fornitura.

GENERAL FEATURES:

OMAL butterfly valves, available in wafer or lug version from DN40 to DN300, are designed and manufactured to be used in most applications in all industrial fields.

- *General requirements in accordance with UNI EN593.*
- *Face to face as per EN 558 series 20.*
- *Tightness at 16 bar according to EN 12266-1 rate A.*
- *Integral sealing (with liner vulcanized on hard ring) which avoids any contact between fluid and valve body.*
- *Sealing design allowing perfect adherence to the valve body and perfect tightness to the flanges, without additional parts. Clamping between flanges does not influence the torque of the valve.*
- *Lapped disc edges that allows better tightness, reduced torque and low wear of the liner.*
- *Bushes to support the shaft.*
- *Coupling between stem and disc with splined connection to reduce clearance*
- *Valve neck with top work as per EN ISO 5211 for easy connections with all different types of actuators.*
- *All components properly treated against corrosion.*

OMAL will be free to change all specifications and data included in this catalogue at any time, so as to improve the quality and the performance of its products.

CORPO LUG *LUG BODY*

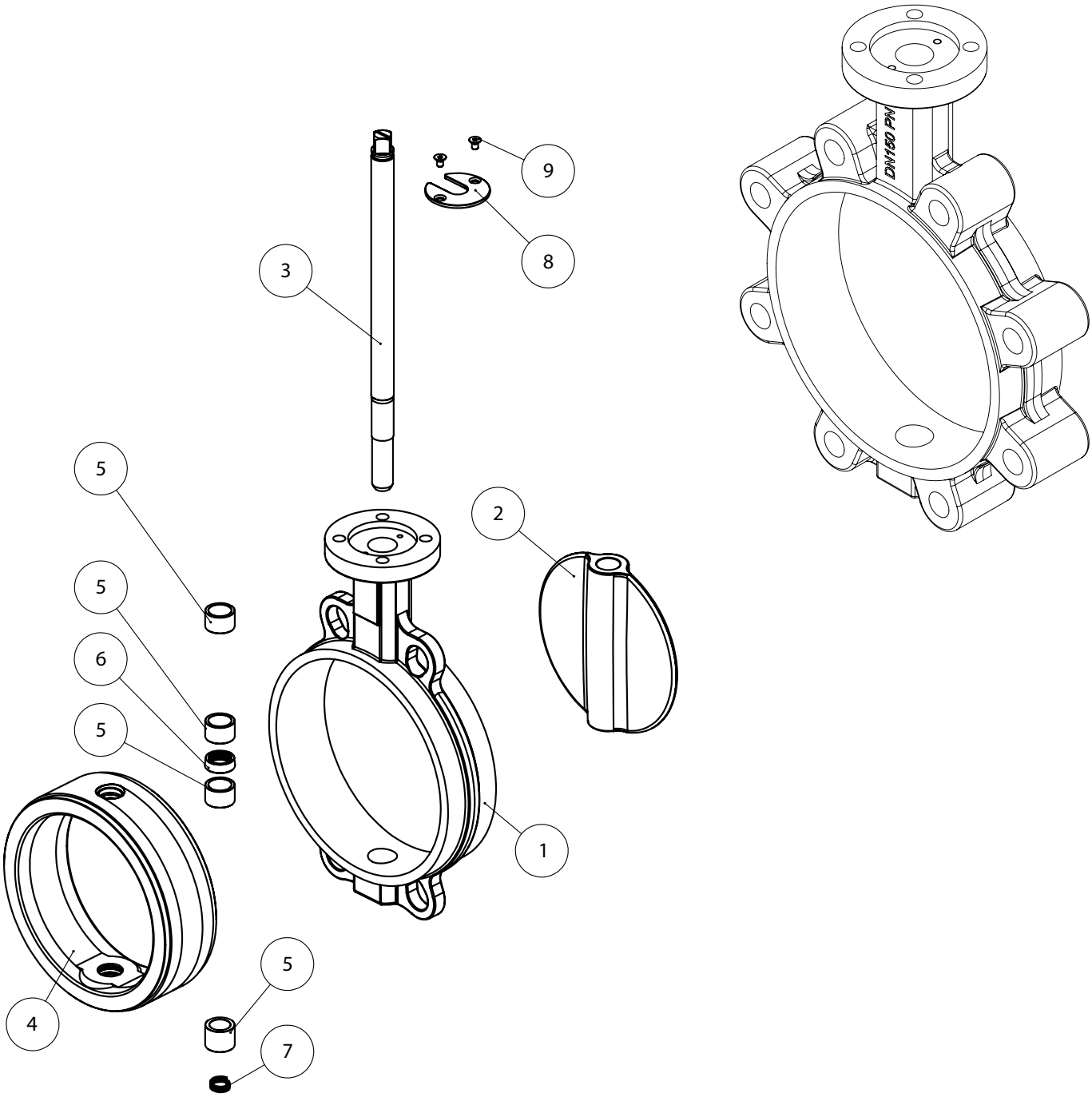

MATERIALI *MATERIALS*		
1	Corpo *Body*	EN GJS 400-18 LT
2	Lente *Disc*	A351 CF8M (316 S.S.), EN GJS 450-10
3	Albero di comando *Upper shaft*	A276 S42000 (420 S.S.)
4*	Guarnizione *Liner*	EPDM-NBR-FKM
5*	Boccola *Bush*	Resina epossidica *Epoxy resin*
6*	Guarnizione albero *Shaft seal*	EPDM-NBR-FKM
7	Molla dispositivo antistatico *Spring antistatic device*	Acciaio inox *Stainless steel*
8	Disco anti-espulsione *Anti blow-out system*	Acciaio al carbonio *Carbon steel*
9	Viti *Screw*	Acciaio inox *Stainless steel*

* Particolari del kit di ricambio KGK... *Components of spare part kit KGK...*

A richiesta sono disponibili altri materiali. Per questi e per altre esigenze consultare i nostri uffici.
If other valve materials are required, please contact our offices.

CARATTERISTICHE - MATERIALI - CAMPO D'IMPIEGO *FEATURES - MATERIALS - APPLICATIONS FIELD*

TABELLA DEI MATERIALI

CORPO	STELO	LENTE	GUARNIZIONE
DN40 - 300 GHISA EN GJS 400 18 LT RIVESTITO VERN. EPOSSIDICA RAL 5002*	ACCIAIO INOX A276 S4200 * ACCIAIO INOX A564 TP 630	***DN40 - 300*** GHISA EN GJS 450-10* RIVESTITO NICHEL CHIMICO ACCIAIO INOX A351-CF8M (316 S.S.)* ACCIAIO BRONZO/ALLUMINIO B148C95400	***DN40 - 300*** EPDM* NBR* FKM* EPDM WATER EPDM WHITE

*Fornitura OMAL standard

TABLE OF ALL AVAILABLE MATERIALS

BODY	*STEM*	*DISC*	*LINER*
DN40 - 300 *GHISA EN GJS 400 18 LT* *RIVESTITO VERN. EPOSSIDICA RAL 5002**	*STAINLESS STEEL* A276 S4200 * *STAINLESS STEEL* A564 TP 630	***DN40 - 300*** *DUCTIL IRON EN GJS 450-10** *CHEMICAL NICKEL PLATED* *STAINLESS STEEL A351-CF8M (316 S.S.)* STEEL BRONZE/ALUMINIUM B148C95400*	***DN40 - 300*** *EPDM** *NBR** *FKM** *EPDM WATER* *EPDM WHITE*

**Standard OMAL supply*

GUIDA ALL'UTILIZZO DEI MATERIALI

MATERIALE	CARATTERISTICHE	APPLICAZIONI
GHISA EN GJS 400-18 LT	Resistenza meccanica paragonabile a quella dell'acciaio. Temperatura di utilizzo: da -20°C a +200°C.	Impieghi generici Normalmente usata per corpo e farfalla
ACCIAIO INOX A351-CF8M	Resistenza molto buona alla corrosione	Circuiti alimentari, chimici, farmaceutici ecc..
EPDM, EPDM WHITE	Temperatura di utilizzo: da -20°C a +120°C. Sconsigliato per idrocarburi.	Acqua (addolcita, industriale, glicole, di mare), vapore acqueo, ozono, basi e acidi diluiti, solventi acetonici, alcool, soda caustica, agenti atmosferici
NBR	Buone proprietà meccaniche (abrasione), buona tenuta agli olii minerali a certi idrocarburi e ai solventi alifatici Temperatura di utilizzo: -20°C a +80°C. Sconsigliato con acetone, con chetoni, nitrati e idrocarburi clorurati.	Servizi generali, aria compressa, acqua fredda, fluidi idraulici, metano, butano, petrolio, acqua di mare, circuiti abrasivi di trasporto pneumatico, grassi animali e vegetali.
FKM	Resistenza molto buona a: calore, luce, agenti atmosferici, solventi bezoici. Impermeabile ai gas. Sconsigliato per vapore e acqua bollente. Temperatura di utilizzo: -12°C a +180°C.	Solventi (meno gli acetonici), idrocarburi solidi, carburanti ossigenanti, acidi, basi, fluidi idraulici, olii.
EPDM PER ACQUA POTABILE	Specificamente formulato per impiego con acqua destinata al consumo umano in accordo ed in conformita' al D.L. 174/2004. Temperatura di utilizzo: -20°C a +120°C. Sconsigliato per idrocarburi.	Acqua (addolcita, industriale, glicole, di mare), vapore acqueo, ozono, basi e acidi diluiti, solventi acetonici, alcool, soda caustica, agenti atmosferici

N.B. Nella tabella sopra sono riportate le caratteristiche peculiari, e le conseguenti applicazioni specifiche, di ogni materiale che OMAL Vi mette a disposizione. Ciononostante, in situazioni inusuali (come installazioni speciali, contatti con fluidi particolari, condizioni straordinarie di pressione e temperatura, ecc..), la variazione dei fattori che influenzano corrosione e abrasione, può alterare le prestazioni dei materiali. In ogni caso, Vi ricordiamo che spetta comunque al cliente la scelta finale del materiale e che il nostro ufficio commerciale sarà lieto di esaminare qualsiasi Vostra esigenza.

MATERIAL APPLICATIONS

MATERIAL	*FEATURES*	*APPLICATIONS*
GHISA EN GJS 400-18 LT	*Mechanical strength as good as stainless steel* *Operating temperature (°C): -20°/+200°.*	*General applications* *Used as a standard for body and disc*
STAINLESS STEEL A351-CF8M	*Excellent corrosion resistance*	*Food, chemical, pharmaceutical...etc*
EPDM	*Operating temperature (°C): -20°/+120°.* *Unsuitable for hydrocarbons.*	*Water (soft, sea, glycolic and industrial), steam, ozone, bases and diluted acids, acetic solvents, alcohol, caustic soda, atmospheric agents.*
NBR	*Good abrasion/wear resistance. Good chemical and mechanical srenght to mineral oils, some hydrocarbons and aliphatic solvents.* *Operating temperature (°C): -20° / + 80°.* *Unsuitable for acetone, ketones, nitrates and chlorinated hydrocarbons.*	*General applications, compressed air, cold water, hydraulic fluids, methane, butane, petroleum, sea water, abrasive materials for pneumatic circuits, animal and vegetables fats.*
FKM	*Excellent chemical and mechanical strenght to heat, atmospheric agents, benzoic solvents. Gas-proof. Unsuitable for steam and boiling water.* *Operating temperature (°C): -12° / +180°.*	*Solvents (acetic excluded), solid hydrocarbons, oxygenating fuels, acids, bases, hydraulic fluids, oils.*
EPDM FOR POTABLE WATER	*Suitable for potable water accordingly to italian law D.L. 174/2004.* *Operating temperature (°C): -20 / + 120. Unsuitable for hydrocarbons.*	*Water (soft, sea, glycolic and industrial), steam, ozone, bases and diluted acids, acetic solvents, alcohol, caustic soda, atmospheric agents.*

***NOTE:** The table above lists typical features and applications of all "Omal" products. Nevertheless, if unusual situations occur (i.e. special applications, contacts with particular fluids, extraordinary pressure or temperature conditions, ...) the elements which determine corrosion and abrasion might change and, as a consequence, metal performances might change, too. It is always the customer who has to choose the right material; however, our sales department is willing to meet all customers requests.*

DIAGRAMMA PERDITA DI CARICO-PORTATA *PRESSURE LOSS-FLOW DIAGRAM*

VALORI DI KV [M³/H] *FLOW RATE VALUES [M³/H]*															
Misura *Size*	**20**	**25**	**30**	**35**	**40**	**45**	**50**	**55**	**60**	**65**	**70**	**75**	**80**	**85**	**90**
DN40	1	2	5	8	12	17	22	27	34	42	50	55	57	60	60
DN50	2	5	8	13	19	26	34	44	56	70	83	94	99	102	102
DN65	4	10	18	26	37	49	65	83	102	127	150	172	181	182	182
DN80	9	18	29	44	59	77	101	126	157	196	241	285	311	329	330
DN100	24	39	59	81	106	137	175	219	278	345	425	504	558	581	582
DN125	35	58	80	105	133	178	227	280	355	442	544	654	751	809	809
DN150	69	100	137	178	235	299	386	486	608	770	954	1156	1355	1489	1488
DN200	110	172	239	312	408	515	671	861	1081	1374	1740	2185	2548	2788	2790
DN250	213	312	415	544	691	894	1104	1393	1752	2197	2728	3308	3795	4044	4047
DN300	296	416	565	731	946	1175	1540	1949	2445	3111	3883	4772	5618	6198	6194

Il valore Kv é il valore di portata in m3/h (con acqua a 15°C) provocante la caduta di pressione di 1 bar.

Kv is the coefficient, expressed in m3/h (with water at 15°C) causing a pressure loss of 1 bar.

Cv factor is the flow of water at 60°F in US gallons/minutes (gpm) at appressure drop of 1lb / in2.

*Cv = 1,156 * Kv*

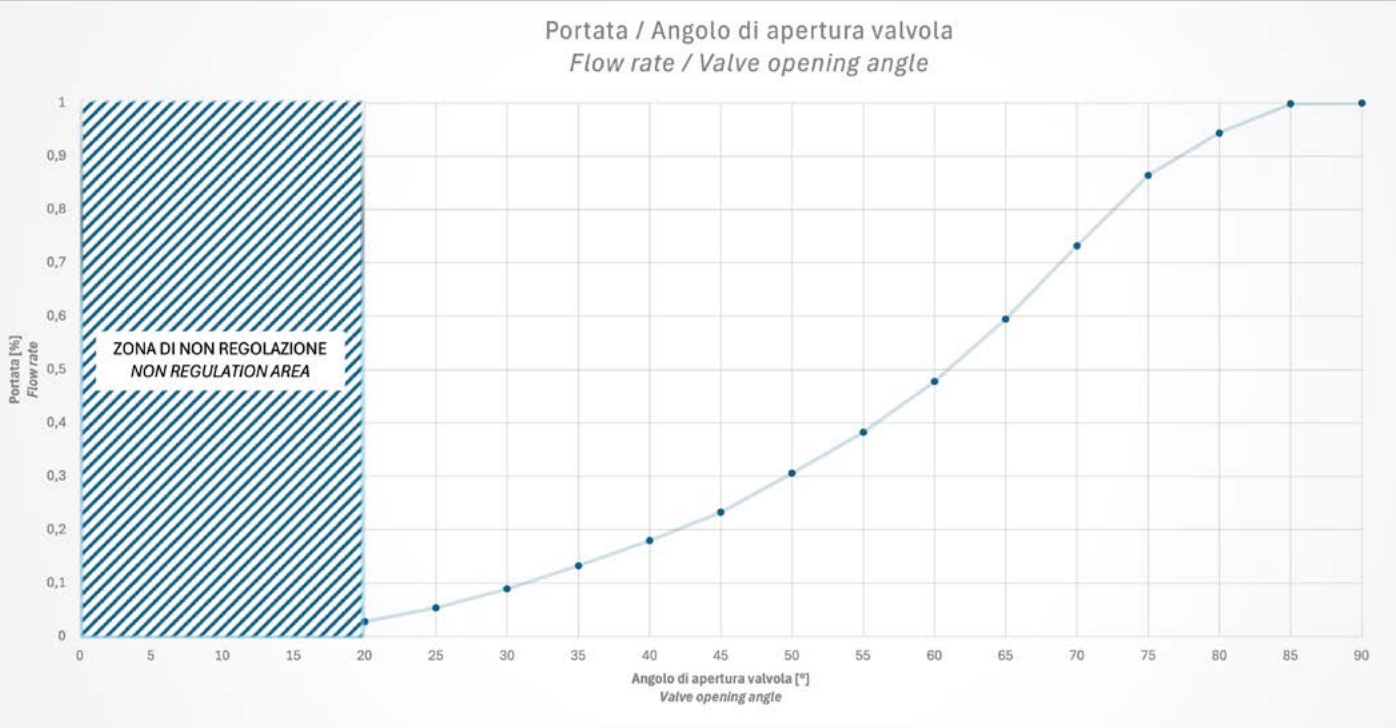

Andamento indicativo della portata in funzione dell'angolo di apertura. La portata varia in funzione della dimensione valvola. Per i valori puntuali delle differenti misure fare riferimento alla tabella precedente.

Indicative flow characteristic as a function of the opening angle. Flow rate values vary according to valve size. For specific values for each valve size, please refer to the table above.

ISTRUZIONI PER IL MONTAGGIO *MOUNTING INSTRUCTIONS*

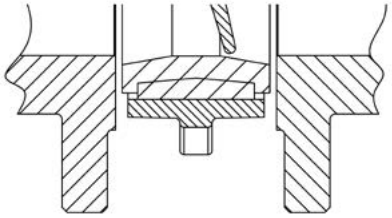

La distanza tra le flange deve permettere l'introduzione della valvola senza che la guarnizione interferisca con le stesse. Durante l'operazione la farfalla deve trovarsi in posizione semichiusa.

When the valve is being inserted, the flanges must be at such a distance from one another to make inspection possible without any contacts between flanges and sealing. Meanwhile, the butterfly must be kept in "half-closed" position.

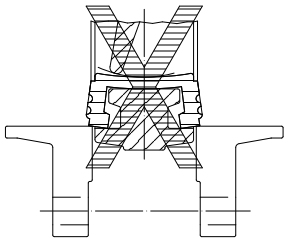

Le valvole lug, se usate come valvole di fine linea, devono essere montate con una contro-flangia e sono declassate a PN10. A prescindere dal PN valvola Non è consentito il montaggio senza flangia a valle.

When used as end-of-line valves, lug valves shall be installed with a downstream mating flange and are derated to PN10. Regardless of the valve PN rating installation without the downstream mating flange is not permitted.

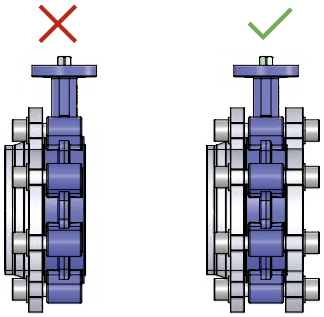

I diametri delle flange devono essere conformi ai valori indicati.

• Dmin è il diametro minimo interno della flangia (o del tubo) per evitare l'interferenza con l'apertura del disco (nel caso di valvola perfettamente centrata);
• D è il diametro interno della flangia (o del tubo) per un utilizzo ottimale;
• Dmax è il diametro massimo possibile interno della flangia (o del tubo), nel caso di valvola perfettamente centrata, per un utilizzo in pressione ridotta a 10 bar.

The flange bore diameters shall comply with the specified values.

• Dmin is the minimum internal diameter of the flange (or pipe) required to prevent interference with the disc opening when the valve is perfectly centered;
• D is the internal diameter of the flange (or pipe) for optimum operation;
• Dmax is the maximum possible internal diameter of the flange (or pipe), when the valve is perfectly centered, for operation at a reduced pressure rating of 10 bar.

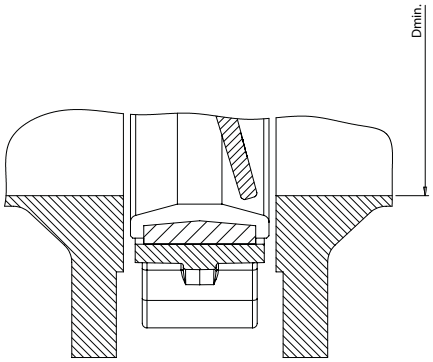

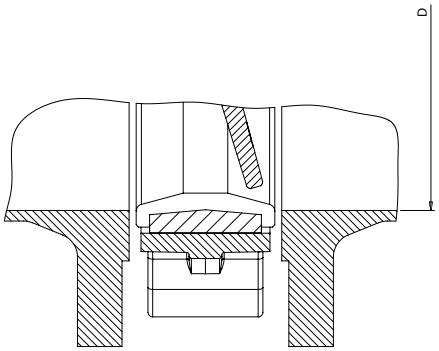

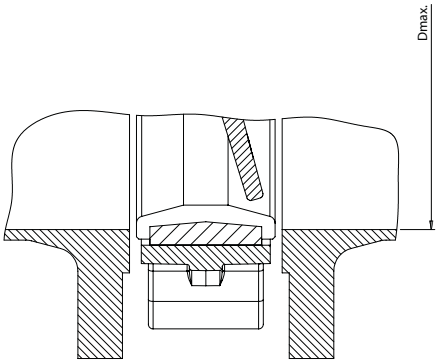

DIMENSIONI FLANGE *FLANGE SIZE*

diametro *diameter* \ valvola *valve*		DN 40	DN 50	DN 65	DN 80	DN 100	DN 125	DN 150	DN 200	DN 250	DN 300
Dmin*	mm.	30	34	48	67	93	113	147	196	244	295
D	mm.	47	57	73,5	88	109	128	169	207	262	319
Dmax*	mm.	59,2	63,5	77,5	91	122	145	175	221,5	277	329

(*) Accertarsi che la valvola sia ben centrata tra i tiranti.
Please check that body is well centered between tie rods.

TABELLA DI CODIFICA *CODIFICATION TABLE*

	OPERATING SYSTEM	FLANGE TYPE	DISC MATERIAL	PRESSURE DESIGNATION	SEAT MATERIAL	STEM MATERIAL	SIZE
ESEMPIO *EXAMPLE*	V	87	6	X	E	0	72

SEE TABLE 1	
WAFER	87
LUG	88
DUCTILE IRON (GJS 450-10)	5
STAINLESS STEEL (CF8M)	6
BRONZE-ALUMINIUM	7
STAINLESS STEEL POLISHED (CF8M LUCID.)	8
PN 10-16 (WAFER or LUG)	X
PN 10 (WAFER or LUG)	K
PN 16 (LUG)	F
ANSI 150 LUG (Pmax 16 bar)	1
EPDM WHITE	Z
EPDM	E
EPDM FOR WATER	M
NBR	N
FKM	V

68	DN 40
69	DN 50
70	DN 65
71	DN 80
72	DN 100
73	DN 125
74	DN 150
75	DN 200
76	DN 250
77	DN 300

0	420 S.S.	
1	431 S.S.	
X	420 S.S.	VALVOLA SGRASSATA PER O_2 *DEGREASED VALVE FOR* O_2
T	420 S.S.	CERTIFICATA **EN 14432** ***EN 14432*** *CERTIFIED*

TABLE 1 OPERATING SYSTEM	
V	ASSE NUDO *BARE SHAFT*
L	LEVA *LEVER*
DG	ATTUATORE PNEUMATICO DOPPIO EFFETTO *PNEUMATIC DOUBLE ACTING ACTUATOR*
SG	ATTUATORE PNEUMATICO SEMPLICE EFFETTO *SPRING RETURN PNEUMATIC ACTUATOR*
DGV	ATT. PNEUM. DOPPIO EFFETTO CON VOLANTINO *PNEUM. DOUBLE ACTING ACT. W/HANDWHEEL*
SGV	ATT. PNEUM. SEMPLICE EFFETTO CON VOLANTINO *PNEUM. SPRING RETURN ACT. W/HANDWHEEL*
DGR	ATT. PNEUM. DOPPIO EFFETTO CON RID. DISINSERIBILE *DOUBLE ACTING ACT. W/DECLUTCHABLE GEAR*
SGR	ATT. PNEUM. SEMPLICE EFFETTO CON RID. DISINSERIBILE *SPRING RETURN ACT. W/DECLUTCHABLE GEAR*
I	ATT. PNEUM. DOPPIO EFFETTO INOX *STAINLESS STEEL PNEUMATIC DOUBLE ACTING ACTUATOR*
X	ATT. PNEUM. SEMPLICE EFFETTO INOX *STAINLESS STEEL SPRING RETURN PNEUM. ACT.*
R	RIDUTTORE MANUALE *GEAR BOX*
RL	GEAR BOX CON SISTEMA DI BLOCCAGGIO *GEAR BOX W/LOCKING DEVICE*
RC	RIDUTTORE MANUALE CON CATENA *GEAR BOX WITH HANDWHEEL FOR CHAIN*

ITEM 875-876-877 KRAVEN

VALVOLA A FARFALLA IN GHISA PER MONTAGGIO TRA FLANGE TIPO "WAFER"
DUCTIL IRON BUTTERFLY VALVE FOR MOUNTING BETWEEN FLANGES, "WAFER" TYPE

ITEM 875
Corpo: Ghisa
Lente: Ghisa
Guarnizioni: vedere tabella

ITEM 876
Corpo: Ghisa
Lente: CF8M (316 S.S.)
Guarnizioni: vedere tabella

ITEM 877
Corpo: Ghisa
Lente: Bronzo Alluminio
Guarnizioni: vedere tabella

ITEM 875
Body: ductil iron
Disc: ductil iron
Liner: see table

ITEM 876
Body: ductil iron
Disc: CF8M (316 S.S.)
Liner: see table

ITEM 877
Body: ductil iron
Disc: Bronze aluminium
Liner: see table

ESECUZIONI STANDARD: • Flangiatura standard: PN 6, PN 10 - PN 16 - ANSI 150; • Requisiti generali in accordo a UNI EN593. • Ingombri da faccia a faccia normalizzati EN 558 serie 20. • Testa della valvola normalizzata ISO 5211. • Tenuta secondo EN 12266-1 rate A. • Temperatura di utilizzo per le guarnizioni: EPDM: da -20°C a +120°C ; NBR: da -20°C a +80°C; FKM: da -12°C a +180°C; • Pressione massima di utilizzo 16 bar (anche ANSI 150); • Utilizzo per il vuoto; • EPDM per acqua potabile da -20°C a +120°C; • EPDM bianco da -20°C a +120°C;	***STANDARD EXECUTIONS:*** • *Standard flanges: PN 6, PN 10 - PN 16 - ANSI 150;* • *General requirements in accordance with UNI EN593.* • *Face to face as per EN 558 serie 20.* • *Valve head as per ISO 5211.* • *Tightness as per EN 12266-1 rate A .* • *Operating Temperature of liners:* *EPDM: from -20°C to +120°C;* *NBR: from -20°C to +80°C;* *FKM: from -12°C to +180°C;* • *Maximum working pressure 16 bar (also ANSI 150);* • *For vacuum apllications;* • *EPDM for potable water from -20°C to +120°C;* • *EPDM white from -20°C to +120°C;*
ESECUZIONI A RICHIESTA: • Disco CF8M lucidato (Ra max 0.4); • Disco bronzo alluminio e FKM;	***ON REQUEST:*** • *Polished CF8M disc (Ra max 0.4);* • *Bronze aluminium and FKM disc;*
CERTIFICAZIONI: • Conforme alla direttiva Europea 2014/68/UE "PED". • Dichiarazione conformità al D.M.n°174 per l'idoneità al contatto con acqua potabile e fluidi alimentari (V876). • Versione ATEX in conformità alla Direttiva Europea 2014/34/UE. • Certificato ATEX a richiesta.	***CERTIFICATIONS:*** • *According to 2014/68/EU "PED".* • *Conformity to the italian D.M.n°174 suitable with drinking water and alimentary fluid (V876).* • *ATEX version in conformity with European Directive 2014/34/EU.* • *ATEX certificate on request.*

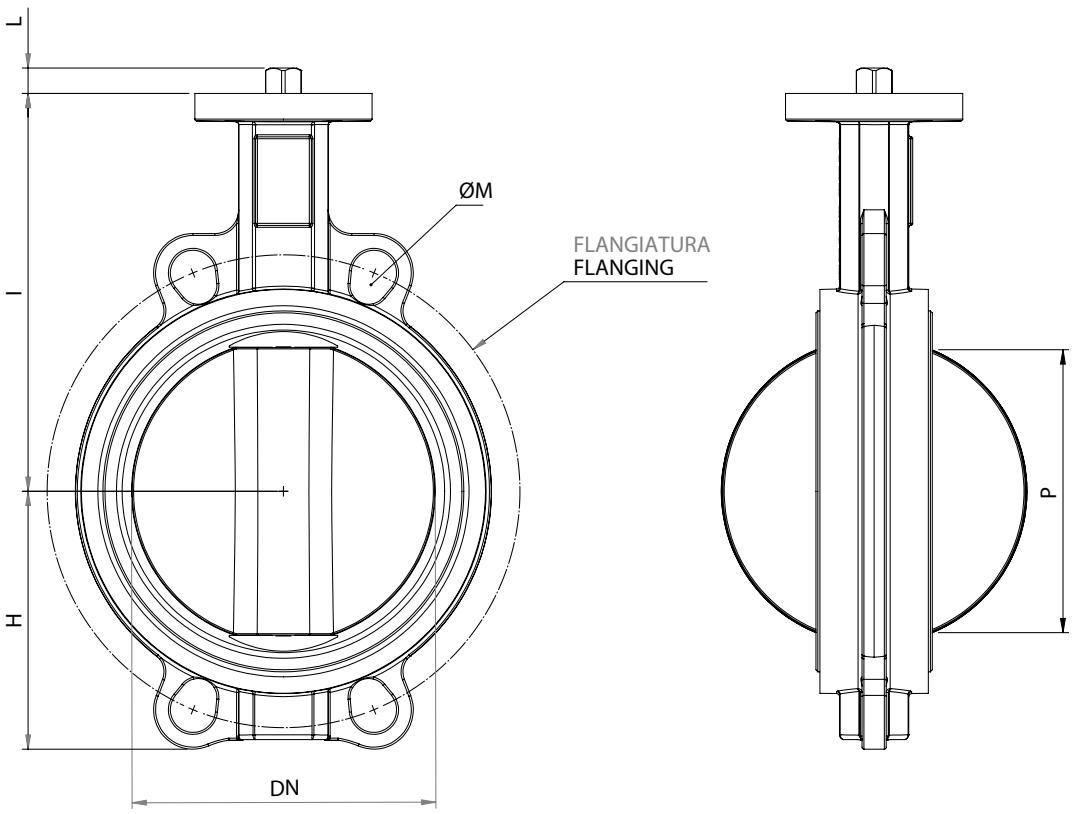

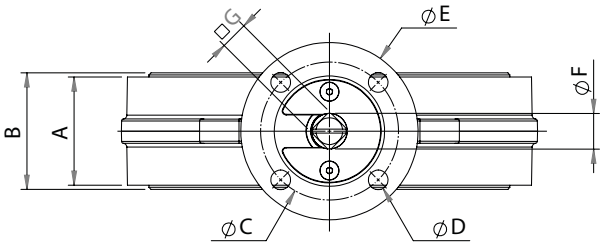

A: Scartamento valvola *Face to face* B: Guarnizioni non compresse *Liner not compressed*

DIMENSIONI *DIMENSIONS*

MISURA *SIZE*		A	B	ØC	ØD	ØE	ØF	□G	H	I	L	P	FLANGIATURA *FLANGING*							
DN [mm]	[inch]												PN6	ØM	PN10	ØM	PN16	ØM	ANSI 150	ØM
DN 40	1"1/2	32	35	50	8	65	12,1	9	55	133	9	29	100	18	110	18	110	18	98	16
DN 50	2"	42	46,1	50	8	65	12,1	9	57	143	9	32	110	18	125	18	125	18	121	19
DN 65	2"1/2	45	49,1	50	8	65	14,1	11	68	152	11	46,5	130	18	145	18	145	18	140	16
DN 80	3"	45	48,4	50	8	65	14,1	11	82	160	11	65	150	18	160	18	160	18	152	19
DN 100	4"	51	55,3	70	10	90	14,1	11	100	181	11	91	170	18	180	18	180	18	191	19
DN 125	5"	55	58,8	70	10	90	18,1	14	112	194	14	111	200	18	210	18	210	18	216	22
DN 150	6"	55	59,1	70	10	90	18,1	14	126	202	14	146	225	22	240	22	240	22	241	26
DN 200	8"	59	64,1	102	12	125	22,1	17	162	240	17	195	280	22	295	22	295	22	298	22
DN 250	10"	67	71,8	102	12	125	28,2	22	193	272	22	242	335	22	350	22	355	26	362	25
DN 300	12"	77	81	103	12	125	28,2	22	238	320	22	293	395	22	400	22	410	26	432	25

COPPIE DI SPUNTO in Nm *BREAKAWAY TORQUES Nm*

Misura *Size*	**DN 40 1"1/2**	**DN 50 2"**	**DN 65 2"1/2**	**DN 80 3"**	**DN 100 4"**	**DN 125 5"**	**DN 150 6"**	**DN 200 8"**	**DN 250 10"**	**DN 300 12"**
PN 10 bar								130	180	270
PN 16 bar	9	10	17	24	42	60	90	180	245	365

I valori della coppia possono variare in funzione della temperatura e del tipo di fluido. Considerare un fattore di sicurezza pari a 1,3.
Con frequenti cicli di apertura e chiusura la coppia di manovra può diminuire sensibilmente rispetto a quella iniziale. Gli accoppiamenti attuatore/valvola, riportati nelle pagine seguenti, sono realizzati per valvole che intercettano fluidi liquidi o gassosi, puliti e per medie temperature. Per maggiori informazioni, o utilizzi diversi, consultare il nostro ufficio commerciale.

Torque can vary depending on temperature and type of fluid; a safety factor of 1.3 must be applied. Torque can drop on high frequency of operations. The actuator/valve sizing, indicated on the following pages, are based for valves to be used with liquids or gaseous fluids, clean, and for medium temperatures. For further information, or different uses please contact our sales department.

ITEM 875-876-877
CORPO IN GHISA *DUCTIL IRON BODY*
ASSE LIBERO *FREE SHAFT*

ASSE LIBERO - LENTE IN GHISA *FREE SHAFT - DUCTIL IRON BUTTERFLY*

MISURA *SIZE*		TENUTA *LINER*		
DN [mm]	[inch]	EPDM	NBR	FKM
DN 50	2"	V875XE069	V875XN069	V875XV069
DN 65	2"1/2	V875XE070	V875XN070	V875XV070
DN 80	3"	V875XE071	V875XN071	V875XV071
DN 100	4"	V875XE072	V875XN072	V875XV072
DN 125	5"	V875XE073	V875XN073	V875XV073
DN 150	6"	V875XE074	V875XN074	V875XV074
DN 200	8"	V875XE075	V875XN075	V875XV075
DN 250	10"	V875XE076	V875XN076	V875XV076
DN 300	12"	V875XE077	V875XN077	V875XV077

ASSE LIBERO - LENTE IN INOX *FREE SHAFT - STAINLESS STEEL DISC*

MISURA *SIZE*		TENUTA *LINER*				
DN [mm]	[inch]	EPDM	NBR	FKM	EPDM BIANCO *WHITE*	EPDM WATER
DN 40	1"1/2	V876XE068	V876XN068	V876XV068	V876XZ068	V876XM068
DN 50	2"	V876XE069	V876XN069	V876XV069	V876XZ069	V876XM069
DN 65	2"1/2	V876XE070	V876XN070	V876XV070	V876XZ070	V876XM070
DN 80	3"	V876XE071	V876XN071	V876XV071	V876XZ071	V876XM071
DN 100	4"	V876XE072	V876XN072	V876XV072	V876XZ072	V876XM072
DN 125	5"	V876XE073	V876XN073	V876XV073	V876XZ073	V876XM073
DN 150	6"	V876XE074	V876XN074	V876XV074	V876XZ074	V876XM074
DN 200	8"	V876XE075	V876XN075	V876XV075	V876XZ075	V876XM075
DN 250	10"	V876XE076	V876XN076	V876XV076	V876XZ076	V876XM076
DN 300	12"	V876XE077	V876XN077	V876XV077	V876XZ077	V876XM077

ASSE LIBERO - LENTE IN Br-Al *FREE SHAFT - Br-Al DISC*

MISURA *SIZE*		TENUTA *LINER*		
DN [mm]	[inch]	EPDM	NBR	FKM*
DN 50	2"	V877XE069	V877XN069	V877XV069*
DN 65	2"1/2	V877XE070	V877XN070	V877XV070*
DN 80	3"	V877XE071	V877XN071	V877XV071*
DN 100	4"	V877XE072	V877XN072	V877XV072*
DN 125	5"	V877XE073	V877XN073	V877XV073*
DN 150	6"	V877XE074	V877XN074	V877XV074*
DN 200	8"	V877XE075	V877XN075	V877XV075*
DN 250	10"	V877XE076	V877XN076	V877XV076*
DN 300	12"	V877XE077	V877XN077	V877XV077*

* Disponibili su richiesta. *Available upon request.*

ITEM 875-876-877
CORPO IN GHISA *DUCTIL IRON BODY*
CON LEVA *WITH LEVER*

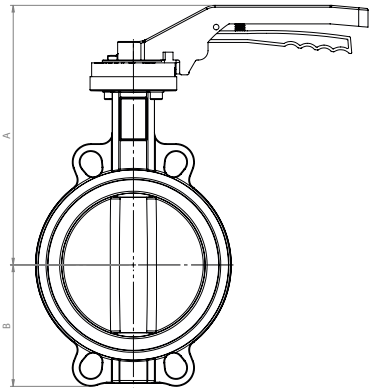

DIMENSIONI *DIMENSIONS*						
MISURA *SIZE*		A	B	øC	D	Kg
DN [mm]	[inch]					
DN 40	1"1/2	203	54	65	190	2
DN 50	2"	213	57	65	190	2,2
DN 65	2"1/2	222	68	65	190	2,6
DN 80	3"	232	82	65	190	2,9
DN 100	4"	261	100	90	253	4,4
DN 125	5"	274	112	90	253	6,1
DN 150	6"	282	126	90	253	7,5
DN 200	8"	360	162	125	360	12
DN 250	10"	392	193	125	360	19
DN 300	12"	440	237	125	360	27

CARATTERISTICHE DELLA LEVA
Leva con regolazione dentellata a 10 posizioni:
Materiale: alluminio;
Trattamento esterno: verniciata (poliestere);
Peso: da 0,3 a 0,9 Kg.
Lucchettabile in ogni posizione.

LEVER FEATURES
10-position lever; lockable in each position
Material: Aluminium;
Surface coating: polyester
Weight: from 0,3 to 0,9 Kg.

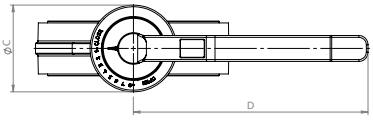

CON LEVA - LENTE IN GHISA *WITH LEVER - DUCTIL IRON DISC*					
MISURA *SIZE*		TENUTA *LINER*			
DN [mm]	[inch]	EPDM	NBR	FKM	LEVA *LEVER*
DN 50	2"	L875XE069	L875XN069	L875XV069	KLW87568
DN 65	2"1/2	L875XE070	L875XN070	L875XV070	KLW87570
DN 80	3"	L875XE071	L875XN071	L875XV071	KLW87570
DN 100	4"	L875XE072	L875XN072	L875XV072	KLW87572
DN 125	5"	L875XE073	L875XN073	L875XV073	KLW87573
DN 150	6"	L875XE074	L875XN074	L875XV074	KLW87573
DN 200	8"	L875XE075	L875XN075	L875XV075	KLW87575
DN 250	10"	L875XE076	L875XN076	L875XV076	KLW87576
DN 300	12"	L875XE077	L875XN077	L875XV077	KLW87576

CON LEVA - LENTE IN INOX *WITH LEVER - STAINLESS STEEL DISC*							
MISURA *SIZE*		TENUTA *LINER*					
DN [mm]	[inch]	EPDM	NBR	FKM	EPDM BIANCO *WHITE*	EPDM WATER	LEVA *LEVER*
DN 40	1"1/2	L876XE068	L876XN068	L876XV068	L876XZ068	L876XM068	KLW87568
DN 50	2"	L876XE069	L876XN069	L876XV069	L876XZ069	L876XM069	KLW87568
DN 65	2"1/2	L876XE070	L876XN070	L876XV070	L876XZ070	L876XM070	KLW87570
DN 80	3"	L876XE071	L876XN071	L876XV071	L876XZ071	L876XM071	KLW87570
DN 100	4"	L876XE072	L876XN072	L876XV072	L876XZ072	L876XM072	KLW87572
DN 125	5"	L876XE073	L876XN073	L876XV073	L876XZ073	L876XM073	KLW87573
DN 150	6"	L876XE074	L876XN074	L876XV074	L876XZ074	L876XM074	KLW87573
DN 200	8"	L876XE075	L876XN075	L876XV075	L876XZ075	L876XM075	KLW87575
DN 250	10"	L876XE076	L876XN076	L876XV076	L876XZ076	L876XM076	KLW87576
DN 300	12"	L876XE077	L876XN077	L876XV077	L876XZ077	L876XM077	KLW87576

CON LEVA - LENTE IN Br-Al *WITH LEVER - Br-Al DISC*					
MISURA *SIZE*		TENUTA *LINER*			
DN [mm]	[inch]	EPDM	NBR	FKM*	LEVA *LEVER*
DN 50	2"	L877XE069	L877XN069	L877XV069*	KLW87568
DN 65	2"1/2	L877XE070	L877XN070	L877XV070*	KLW87570
DN 80	3"	L877XE071	L877XN071	L877XV071*	KLW87570
DN 100	4"	L877XE072	L877XN072	L877XV072*	KLW87572
DN 125	5"	L877XE073	L877XN073	L877XV073*	KLW87573
DN 150	6"	L877XE074	L877XN074	L877XV074*	KLW87573
DN 200	8"	L877XE075	L877XN075	L877XV075*	KLW87575
DN 250	10"	L877XE076	L877XN076	L877XV076*	KLW87576
DN 300	12"	L877XE077	L877XN077	L877XV077*	KLW87576

* Disponibili su richiesta. *Available upon request.*

ITEM 875-876-877
CORPO IN GHISA *DUCTIL IRON BODY*
CON RIDUTTORE *WITH GEAR BOX*

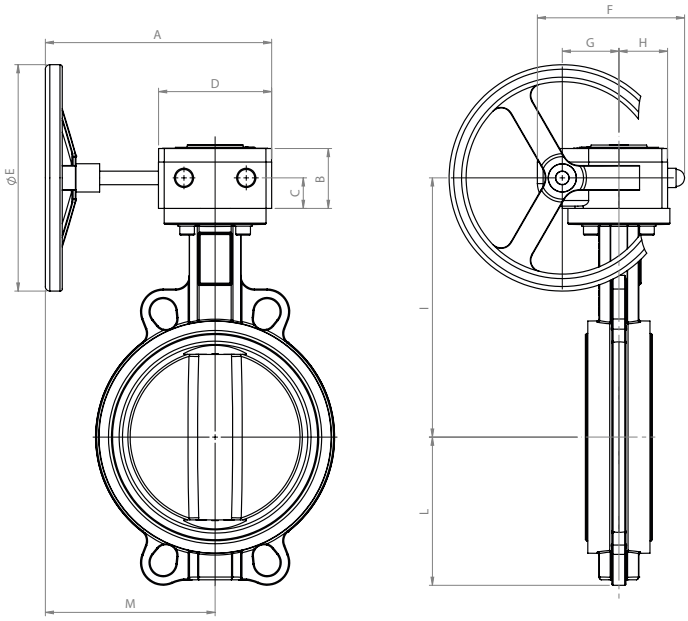

CARATTERISTICHE DEL RIDUTTORE

Meccanismo di concezione sperimentata, funzionante tramite pignone dentato e vite senza fine.
Un indicatore visivo dà la posizione della valvola.
Carter in lega di alluminio per i riduttori "RF0" (IP65), in ghisa per i riduttori "RRM..." (IP67).
Pignone dentato in ghisa.
Vite senza fine in acciaio trattato.
Volantino in acciaio.
Esterno trattato con vernice epossidica.

GEAR BOX FEATURES

Designed tested mechanism, working through pinion and worm.
Visual indicator gives the position of the valve
Aluminium alloy carter for the gear box "RF0 " type (IP65), cast iron for the gear box "RRM..." Type (IP67).
Cast iron pinion.
Worm gear in hardened steel.
Steel wheel.
Epoxy painted external surface.

DIMENSIONI *DIMENSIONS*

MISURA *SIZE* DN [mm]	[inch]	A	B	C	D	øE	F	G	H	I	L	M	Kg
DN 40	1"1/2	200	49	24	80	140	115	42	35	159	54	160	3,1
DN 50	2"	200	49	24	80	140	115	42	35	169	57	160	3,3
DN 65	2"1/2	200	54	27	100	200	130	50	40	181	68	150	3,7
DN 80	3"	200	54	27	100	200	130	50	40	189	82	150	4
DN 100	4"	200	54	27	100	200	130	50	40	210	100	150	6,3
DN 125	5"	200	54	27	100	200	130	50	40	223	112	150	8
DN 150	6"	200	54	27	100	200	130	50	40	231	126	150	9,4
DN 200	8"	250	71	41	140	300	175	60	60	283	162	180	14,9
DN 250	10"	250	71	41	140	300	175	60	60	315	193	180	21,9
DN 300	12"	250	71	41	140	300	175	60	60	363	237	180	29,9

ITEM 875-876-877
CORPO IN GHISA *DUCTIL IRON BODY*
CON RIDUTTORE *WITH GEAR BOX*

CON RIDUTTORE - LENTE IN GHISA *WITH GEAR BOX - DUCTIL IRON DISC*

MISURA *SIZE*		TENUTA *LINER*			RIDUTTORE *GEAR-BOX*	KIT VALVOLA-RIDUTTORE *KIT VALVE-GEAR BOX*
DN [mm]	[inch]	EPDM	NBR	FKM		
DN 50	2"	R875XE069	R875XN069	R875XV069	RF01070900	KCF046199
DN 65	2"1/2	R875XE070	R875XN070	R875XV070	RF01051100	KCF046199
DN 80	3"	R875XE071	R875XN071	R875XV071	RF01051100	KCF046199
DN 100	4"	R875XE072	R875XN072	R875XV072	RF02071400	KCF056244
DN 125	5"	R875XE073	R875XN073	R875XV073	RF02071400	KCF056248
DN 150	6"	R875XE074	R875XN074	R875XV074	RF02071400	KCF056248
DN 200	8"	R875XE075	R875XN075	R875XV075	RF04122200	KCF106246
DN 250	10"	R875XE076	R875XN076	R875XV076	RF04122200	KCF106213
DN 300	12"	R875XE077	R875XN077	R875XV077	RF04122200	KCF106213

CON RIDUTTORE - LENTE IN INOX *WITH GEAR BOX - STAINLESS STEEL DISC*

MISURA *SIZE*		TENUTA *LINER*					RIDUTTORE *GEAR-BOX*	KIT VALVOLA-RIDUTTORE *KIT VALVE-GEAR BOX*
DN [mm]	[inch]	EPDM	NBR	FKM	EPDM BIANCO *WHITE*	EPDM WATER		
DN 40	1"1/2	R876XE068	R876XN068	R876XV068	R876XZ068	R876XM068	RF01070900	KCF046199
DN 50	2"	R876XE069	R876XN069	R876XV069	R876XZ069	R876XM069	RF01070900	KCF046199
DN 65	2"1/2	R876XE070	R876XN070	R876XV070	R876XZ070	R876XM070	RF01051100	KCF046199
DN 80	3"	R876XE071	R876XN071	R876XV071	R876XZ071	R876XM071	RF01051100	KCF046199
DN 100	4"	R876XE072	R876XN072	R876XV072	R876XZ072	R876XM072	RF02071400	KCF056244
DN 125	5"	R876XE073	R876XN073	R876XV073	R876XZ073	R876XM073	RF02071400	KCF056248
DN 150	6"	R876XE074	R876XN074	R876XV074	R876XZ074	R876XM074	RF02071400	KCF056248
DN 200	8"	R876XE075	R876XN075	R876XV075	R876XZ075	R876XM075	RF04122200	KCF106246
DN 250	10"	R876XE076	R876XN076	R876XV076	R876XZ076	R876XM076	RF04122200	KCF106213
DN 300	12"	R876XE077	R876XN077	R876XV077	R876XZ077	R876XM077	RF04122200	KCF106213

CON RIDUTTORE - LENTE IN Br-Al *WITH GEAR BOX - Br-Al DISC*

MISURA *SIZE*		TENUTA *LINER*			RIDUTTORE *GEAR-BOX*	KIT VALVOLA-RIDUTTORE *KIT VALVE-GEAR BOX*
DN [mm]	[inch]	EPDM	NBR	FKM*		
DN 50	2"	R877XE069	R877XN069	R877XV069*	RF01070900	KCF046199
DN 65	2"1/2	R877XE070	R877XN070	R877XV070*	RF01051100	KCF046199
DN 80	3"	R877XE071	R877XN071	R877XV071*	RF01051100	KCF046199
DN 100	4"	R877XE072	R877XN072	R877XV072*	RF02071400	KCF056244
DN 125	5"	R877XE073	R877XN073	R877XV073*	RF02071400	KCF056248
DN 150	6"	R877XE074	R877XN074	R877XV074*	RF02071400	KCF056248
DN 200	8"	R877XE075	R877XN075	R877XV075*	RF04122200	KCF106246
DN 250	10"	R877XE076	R877XN076	R877XV076*	RF04122200	KCF106213
DN 300	12"	R877XE077	R877XN077	R877XV077*	RF04122200	KCF106213

* Disponibili su richiesta. *Available upon request.*

ITEM 875
CORPO IN GHISA *DUCTIL IRON BODY*
CON ATTUATORE PNEUMATICO *WITH PNEUMATIC ACTUATOR*

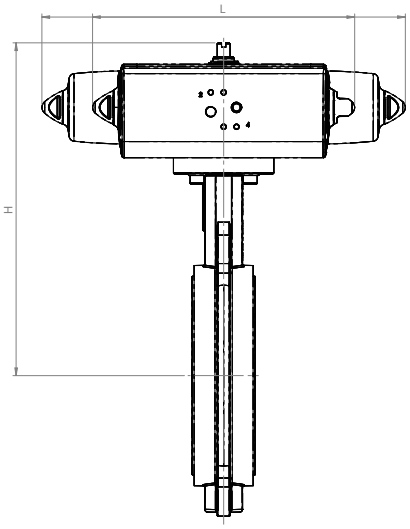

CON ATTUATORE PNEUMATICO DOPPIO EFFETTO - LENTE IN GHISA
WITH DOUBLE ACTING PNEUMATIC ACTUATOR - DUCTIL IRON DISC

MISURA *SIZE*		ΔP max [bar]	TENUTA *LINER*			ATTUATORE *ACTUATOR*	L [mm]	H [mm]	Kg
DN [mm]	[inch]		EPDM	NBR	FKM				
DN 50	2"	16	DG875XE069	DG875XN069	DG875XV069	DAN0030421S	175	218	3,2
DN 65	2"1/2	16	DG875XE070	DG875XN070	DG875XV070	DAN0045422S	189	239	3,8
DN 80	3"	16	DG875XE071	DG875XN071	DG875XV071	DAN0045422S	189	247	4,2
DN 100	4"	16	DG875XE072	DG875XN072	DG875XV072	DAN0060422S	198	274	6,1
DN 125	5"	16	DG875XE073	DG875XN073	DG875XV073	DAN0106411S	237	300	8,5
DN 150	6"	16	DG875XE074	DG875XN074	DG875XV074	DAN0120411S	245	311	10,1
DN 200	8"	16	DG875XE075	DG875XN075	DG875XV075	DAN0240411S	314	384	17,4
DN 250	10"	16	DG875XE076	DG875XN076	DG875XV076	DAN0360411S	340	422	25,5
DN 300	12"	16	DG875XE077	DG875XN077	DG875XV077	DAN0480411S	389	487	36,6
DN 200	8"	10	DG875KE075	DG875KN075	DG875KV075	DAN0180411S	290	380	16,6
DN 250	10"	10	DG875KE076	DG875KN076	DG875KV076	DAN0240411S	314	416	24,4
DN 300	12"	10	DG875KE077	DG875KN077	DG875KV077	DAN0360411S	340	470	33,5

CON ATTUATORE PNEUMATICO SEMPLICE EFFETTO - LENTE IN GHISA
WITH SPRING RETURN PNEUMATIC ACTUATOR - DUCTIL IRON DISC

MISURA *SIZE*		ΔP max [bar]	TENUTA *LINER*			ATTUATORE *ACTUATOR*	L [mm]	H [mm]	Kg
DN [mm]	[inch]		EPDM	NBR	FKM				
DN 50	2"	16	SG875XE069	SG875XN069	SG875XV069	SRN0030402S	259	236	4,2
DN 65	2"1/2	16	SG875XE070	SG875XN070	SG875XV070	SRN0053401S	305	258	5,6
DN 80	3"	16	SG875XE071	SG875XN071	SG875XV071	SRN0053401S	305	266	6
DN 100	4"	16	SG875XE072	SG875XN072	SG875XV072	SRN0060401S	339	290	8
DN 125	5"	16	SG875XE073	SG875XN073	SG875XV073	SRN0090401S	394	334	12
DN 150	6"	16	SG875XE074	SG875XN074	SG875XV074	SRN0120401S	410	346	14,5
DN 200	8"	16	SG875XE075	SG875XN075	SG875XV075	SRN0240401S	521	407	24
DN 250	10"	16	SG875XE076	SG875XN076	SG875XV076	SRN0360401S	613	452	36
DN 300	12"	16	SG875XE077	SG875XN077	SG875XV077	SRN0480401S	649	520	50
DN 200	8"	10	SG875KE075	SG875KN075	SG875KV075	SRN0180401S	474	390	21
DN 250	10"	10	SG875KE076	SG875KN076	SG875KV076	SRN0240401S	521	439	31
DN 300	12"	10	SG875KE077	SG875KN077	SG875KV077	SRN0360401S	613	500	44

Dimensionamento degli attuatori pneumatici fatto considerando una pressione minima di alimentazione pari a 5,6 barg. *Sizing of pneumatic actuators by minimum pressure rate 5,6 barg.*

ITEM 876
CORPO IN GHISA *DUCTIL IRON BODY*
CON ATTUATORE PNEUMATICO *WITH PNEUMATIC ACTUATOR*

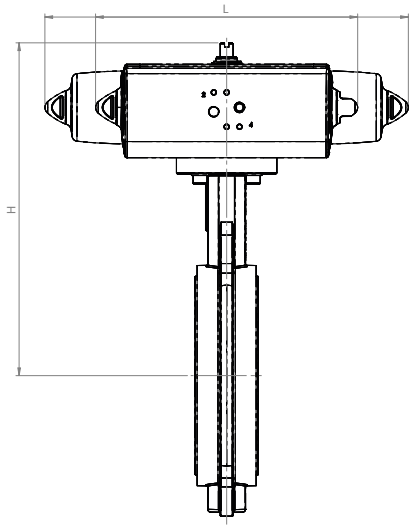

CON ATTUATORE PNEUMATICO DOPPIO EFFETTO - LENTE IN INOX
WITH DOUBLE ACTING PNEUMATIC ACTUATOR - STAINLESS STEEL DISC

MISURA *SIZE*		ΔP max [bar]	TENUTA *LINER*					ATTUATORE *ACTUATOR*	L [mm]	H [mm]	Kg
DN [mm]	[inch]		EPDM	NBR	FKM	EPDM BIANCO *WHITE*	EPDM WATER				
DN 40	1"1/2	16	DG876XE068	DG876XN068	DG876XV068	DG876XZ068	DG876XM068	DAN0030421S	175	208	3
DN 50	2"	16	DG876XE069	DG876XN069	DG876XV069	DG876XZ069	DG876XM069	DAN0030421S	175	218	3,2
DN 65	2"1/2	16	DG876XE070	DG876XN070	DG876XV070	DG876XZ070	DG876XM070	DAN0045422S	189	239	3,8
DN 80	3"	16	DG876XE071	DG876XN071	DG876XV071	DG876XZ071	DG876XM071	DAN0045422S	189	247	4,2
DN 100	4"	16	DG876XE072	DG876XN072	DG876XV072	DG876XZ072	DG876XM072	DAN0060422S	198	274	6,1
DN 125	5"	16	DG876XE073	DG876XN073	DG876XV073	DG876XZ073	DG876XM073	DAN0106411S	237	300	8,5
DN 150	6"	16	DG876XE074	DG876XN074	DG876XV074	DG876XZ074	DG876XM074	DAN0120411S	245	311	10,1
DN 200	8"	16	DG876XE075	DG876XN075	DG876XV075	DG876XZ075	DG876XM075	DAN0240411S	314	384	17,4
DN 250	10"	16	DG876XE076	DG876XN076	DG876XV076	DG876XZ076	DG876XM076	DAN0360411S	340	422	25,5
DN 300	12"	16	DG876XE077	DG876XN077	DG876XV077	DG876XZ077	DG876XM077	DAN0480411S	389	487	36,6
DN 200	8"	10	DG876KE075	DG876KN075	DG876KV075	DG876KZ075	DG876KM075	DAN0180411S	290	380	16,6
DN 250	10"	10	DG876KE076	DG876KN076	DG876KV076	DG876KZ076	DG876KM076	DAN0240411S	314	416	24,4
DN 300	12"	10	DG876KE077	DG876KN077	DG876KV077	DG876KZ077	DG876KM077	DAN0360411S	340	470	33,5

CON ATTUATORE PNEUMATICO SEMPLICE EFFETTO - LENTE IN INOX
WITH SPRING RETURN PNEUMATIC ACTUATOR - STAINLESS STEEL DISC

MISURA *SIZE*		ΔP max [bar]	TENUTA *LINER*					ATTUATORE *ACTUATOR*	L [mm]	H [mm]	Kg
DN [mm]	[inch]		EPDM	NBR	FKM	EPDM BIANCO *WHITE*	EPDM WATER				
DN 40	1"1/2	16	SG876XE068	SG876XN068	SG876XV068	SG876XZ068	SG876XM068	SRN0030402S	259	226	4
DN 50	2"	16	SG876XE069	SG876XN069	SG876XV069	SG876XZ069	SG876XM069	SRN0030402S	259	236	4,2
DN 65	2"1/2	16	SG876XE070	SG876XN070	SG876XV070	SG876XZ070	SG876XM070	SRN0053401S	305	258	5,6
DN 80	3"	16	SG876XE071	SG876XN071	SG876XV071	SG876XZ071	SG876XM071	SRN0053401S	305	266	6
DN 100	4"	16	SG876XE072	SG876XN072	SG876XV072	SG876XZ072	SG876XM072	SRN0060401S	339	290	8
DN 125	5"	16	SG876XE073	SG876XN073	SG876XV073	SG876XZ073	SG876XM073	SRN0090401S	394	334	12
DN 150	6"	16	SG876XE074	SG876XN074	SG876XV074	SG876XZ074	SG876XM074	SRN0120401S	410	346	14,5
DN 200	8"	16	SG876XE075	SG876XN075	SG876XV075	SG876XZ075	SG876XM075	SRN0240401S	521	407	24
DN 250	10"	16	SG876XE076	SG876XN076	SG876XV076	SG876XZ076	SG876XM076	SRN0360401S	613	452	36
DN 300	12"	16	SG876XE077	SG876XN077	SG876XV077	SG876XZ077	SG876XM077	SRN0480401S	649	520	50
DN 200	8"	10	SG876KE075	SG876KN075	SG876KV075	SG876KZ075	SG876KM075	SRN0180401S	474	390	21
DN 250	10"	10	SG876KE076	SG876KN076	SG876KV076	SG876KZ076	SG876KM076	SRN0240401S	521	439	31
DN 300	12"	10	SG876KE077	SG876KN077	SG876KV077	SG876KZ077	SG876KM077	SRN0360401S	613	500	44

Dimensionamento degli attuatori pneumatici fatto considerando una pressione minima di alimentazione pari a 5,6 barg. *Sizing of pneumatic actuators by minimum pressure rate 5,6 barg.*

ITEM 877
CORPO IN GHISA *DUCTIL IRON BODY*
CON ATTUATORE PNEUMATICO *WITH PNEUMATIC ACTUATOR*

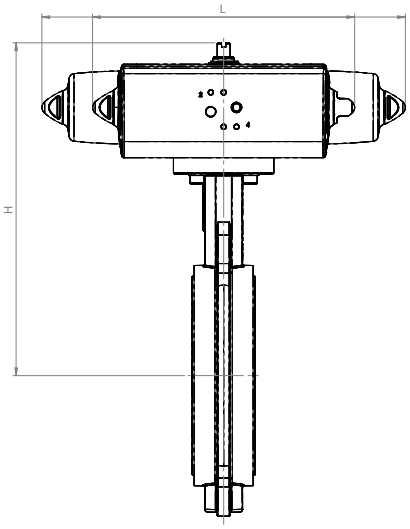

CON ATTUATORE PNEUMATICO DOPPIO EFFETTO - LENTE IN Br-Al
WITH DOUBLE ACTING PNEUMATIC ACTUATOR - Br-Al DISC

MISURA *SIZE*		ΔP max [bar]	TENUTA *LINER*			ATTUATORE *ACTUATOR*	L [mm]	H [mm]	Kg
DN [mm]	[inch]		EPDM	NBR	FKM*				
DN 50	2"	16	DG877XE069	DG877XN069	DG877XV069*	DAN0030421S	175	218	3,2
DN 65	2"1/2	16	DG877XE070	DG877XN070	DG877XV070*	DAN0045422S	189	239	3,8
DN 80	3"	16	DG877XE071	DG877XN071	DG877XV071*	DAN0045422S	189	247	4,2
DN 100	4"	16	DG877XE072	DG877XN072	DG877XV072*	DAN0060422S	198	274	6,1
DN 125	5"	16	DG877XE073	DG877XN073	DG877XV073*	DAN0106411S	237	300	8,5
DN 150	6"	16	DG877XE074	DG877XN074	DG877XV074*	DAN0120411S	245	311	10,1
DN 200	8"	16	DG877XE075	DG877XN075	DG877XV075*	DAN0240411S	314	384	17,4
DN 250	10"	16	DG877XE076	DG877XN076	DG877XV076*	DAN0360411S	340	422	25,5
DN 300	12"	16	DG877XE077	DG877XN077	DG877XV077*	DAN0480411S	389	487	36,6
DN 200	8"	10	DG877KE075	DG877KN075	DG877KV075*	DAN0180411S	290	380	16,6
DN 250	10"	10	DG877KE076	DG877KN076	DG877KV076*	DAN0240411S	314	416	24,4
DN 300	12"	10	DG877KE077	DG877KN077	DG877KV077*	DAN0360411S	340	470	33,5

* Disponibili su richiesta. *Available upon request.*

CON ATTUATORE PNEUMATICO SEMPLICE EFFETTO - LENTE IN Br-Al
WITH SPRING RETURN PNEUMATIC ACTUATOR - Br-Al DISC

MISURA *SIZE*		ΔP max [bar]	TENUTA *LINER*			ATTUATORE *ACTUATOR*	L [mm]	H [mm]	Kg
DN [mm]	[inch]		EPDM	NBR	FKM*				
DN 50	2"	16	SG877XE069	SG877XN069	SG877XV069*	SRN0030402S	259	236	4,2
DN 65	2"1/2	16	SG877XE070	SG877XN070	SG877XV070*	SRN0053401S	305	258	5,6
DN 80	3"	16	SG877XE071	SG877XN071	SG877XV071*	SRN0053401S	305	266	6
DN 100	4"	16	SG877XE072	SG877XN072	SG877XV072*	SRN0060401S	339	290	8
DN 125	5"	16	SG877XE073	SG877XN073	SG877XV073*	SRN0090401S	394	334	12
DN 150	6"	16	SG877XE074	SG877XN074	SG877XV074*	SRN0120401S	410	346	14,5
DN 200	8"	16	SG877XE075	SG877XN075	SG877XV075*	SRN0240401S	521	407	24
DN 250	10"	16	SG877XE076	SG877XN076	SG877XV076*	SRN0360401S	613	452	36
DN 300	12"	16	SG877XE077	SG877XN077	SG877XV077*	SRN0480401S	649	520	50
DN 200	8"	10	SG877KE075	SG877KN075	SG877KV075*	SRN0180401S	474	390	21
DN 250	10"	10	SG877KE076	SG877KN076	SG877KV076*	SRN0240401S	521	439	31
DN 300	12"	10	SG877KE077	SG877KN077	SG877KV077*	SRN0360401S	613	500	44

* Disponibili su richiesta. *Available upon request.*

Dimensionamento degli attuatori pneumatici fatto considerando una pressione minima di alimentazione pari a 5,6 barg. *Sizing of pneumatic actuators by minimum pressure rate 5,6 barg.*

ITEM 875
CORPO IN GHISA *DUCTIL IRON BODY*
CON ATTUATORE ELETTRICO *WITH ELECTRIC ACTUATOR*

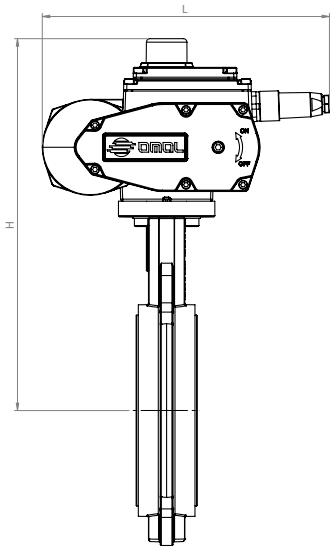

CON ATTUATORE ELETTRICO ON-OFF - LENTE IN GHISA
WITH ON-OFF ELECTRIC ACTUATOR - DUCTIL IRON DISC

MISURA *SIZE*		ΔP max [bar]	TENUTA *LINER*			ATTUATORE *ACTUATOR*	L [mm]	H [mm]	Kg
DN [mm]	[inch]		EPDM	NBR	FKM				
DN 50	2"	16	C875E0A5E69	C875N0A5E69	C875V0A5E69	EA0035A5C000	250	282	6,2
DN 65	2"1/2	16	C875E0A5E70	C875N0A5E70	C875V0A5E70	EA0035A5C000	250	291	6,6
DN 80	3"	16	C875E0A5E71	C875N0A5E71	C875V0A5E71	EA0035A5C000	250	299	7
DN 100	4"	16	C875E0A5G72	C875N0A5G72	C875V0A5G72	EA0070A5C000	250	320	8,5
DN 125	5"	16	C875E0A5I73	C875N0A5I73	C875V0A5I73	EA0130A5C000	280	354	13,5
DN 150	6"	16	C875E0A5I74	C875N0A5I74	C875V0A5I74	EA0130A5C000	280	362	15
DN 200	8"	16	C875E0A5K75	C875N0A5K75	C875V0A5K75	EA0240A5C000	280	400	19,5
DN 250	10"	16	E875E016N76	E875N016N76	E875V016N76	AE160040	256	459	28
DN 300	12"	16	E875E016R77	E875N016R77	E875V016R77	AE160060	381	556	48
DN 250	10"	10	C875E0A5K76	C875N0A5K76	C875V0A5K76	EA0240A5C000	280	432	26,5
DN 300	12"	10	E875E016N77	E875N016N77	E875V016N77	AE160040	256	507	36

CON ATTUATORE ELETTRICO MODULANTE - LENTE IN GHISA
WITH ROTARY MODULAR TYPE ELECTRIC ACTUATOR - DUCTIL IRON DISC

MISURA *SIZE*		ΔP max [bar]	TENUTA *LINER*			ATTUATORE *ACTUATOR*	L [mm]	H [mm]	Kg
DN [mm]	[inch]		EPDM	NBR	FKM				
DN 50	2"	16	M875E016C69	M875N016C69	M875V016C69	AM160002	166	265	5,2
DN 65	2"1/2	16	M875E016F70	M875N016F70	M875V016F70	AM160005	208	318	7,1
DN 80	3"	16	M875E016F71	M875N016F71	M875V016F71	AM160005	208	326	7,5
DN 100	4"	16	M875E016H72	M875N016H72	M875V016H72	AM160010	208	347	9
DN 125	5"	16	M875E016H73	M875N016H73	M875V016H73	AM160010	208	360	10,5
DN 150	6"	16	M875E016L74	M875N016L74	M875V016L74	AM160020	257	389	16,5
DN 200	8"	16	M875E016L75	M875N016L75	M875V016L75	AM160020	257	427	21
DN 250	10"	16	M875E016N76	M875N016N76	M875V016N76	AM160040	257	459	28
DN 300	12"	16	M875E016P77	M875N016P77	M875V016P77	AM160050	381	556	50
DN 300	12"	10	M875E016N77	M875N016N77	M875V016N77	AM160040	257	507	36

Codici con attuatore elettrico 230 Vac. *Items with electric actuator 230 Vac.*

ITEM 876
CORPO IN GHISA *DUCTIL IRON BODY*
CON ATTUATORE ELETTRICO *WITH ELECTRIC ACTUATOR*

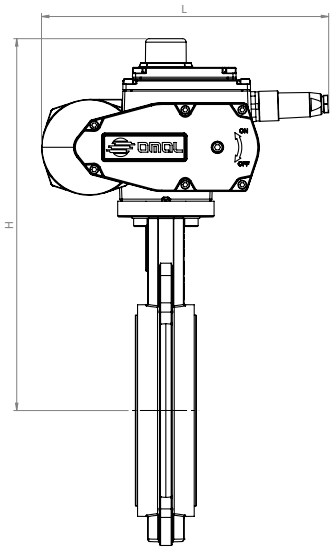

CON ATTUATORE ELETTRICO ON-OFF - LENTE IN INOX
WITH ON-OFF ELECTRIC ACTUATOR - STAINLESS STEEL DISC

MISURA *SIZE*		ΔP max [bar]	TENUTA *LINER*					ATTUATORE *ACTUATOR*	L [mm]	H [mm]	Kg
DN [mm]	[inch]		EPDM	NBR	FKM	EPDM BIANCO *WHITE*	EPDM WATER				
DN 40	1"1/2	16	C876E0A5E68	C876N0A5E68	C876V0A5E68	C876Z0A5Z68	C876M0A5E68	EA0035A5C000	250	272	6
DN 50	2"	16	C876E0A5E69	C876N0A5E69	C876V0A5E69	C876Z0A5Z69	C876M0A5E69	EA0035A5C000	250	282	6,2
DN 65	2"1/2	16	C876E0A5E70	C876N0A5E70	C876V0A5E70	C876Z0A5Z70	C876M0A5E70	EA0035A5C000	250	291	6,6
DN 80	3"	16	C876E0A5E71	C876N0A5E71	C876V0A5E71	C876Z0A5Z71	C876M0A5E71	EA0035A5C000	250	299	7
DN 100	4"	16	C876E0A5G72	C876N0A5G72	C876V0A5G72	C876Z0A5G72	C876M0A5G72	EA0070A5C000	250	320	8,5
DN 125	5"	16	C876E0A5I73	C876N0A5I73	C876V0A5I73	C876Z0A5I73	C876M0A5I73	EA0130A5C000	280	354	13,5
DN 150	6"	16	C876E0A5I74	C876N0A5I74	C876V0A5I74	C876Z0A5I74	C876M0A5I74	EA0130A5C000	280	362	15
DN 200	8"	16	C876E0A5K75	C876N0A5K75	C876V0A5K75	C876Z0A5K75	C876M0A5K75	EA0240A5C000	280	400	19,5
DN 250	10"	16	E876E016N76	E876N016N76	E876V016N76	E876Z016N76	E876M016N76	AE160040	256	459	28
DN 300	12"	16	E876E016R77	E876N016R77	E876V016R77	E876Z016R77	E876M016R77	AE160060	381	556	48
DN 250	10"	10	C876E0A5K76	C876N0A5K76	C876V0A5K76	C876Z0A5K76	C876M0A5K76	EA0240A5C000	280	432	26,5
DN 300	12"	10	E876E016N77	E876N016N77	E876V016N77	E876Z016N77	E876M016N77	AE160040	256	507	36

CON ATTUATORE ELETTRICO MODULANTE - LENTE IN INOX
WITH ROTARY MODULAR TYPE ELECTRIC ACTUATOR - STAINLESS STEEL DISC

MISURA *SIZE*		ΔP max [bar]	TENUTA *LINER*					ATTUATORE *ACTUATOR*	L [mm]	H [mm]	Kg
DN [mm]	[inch]		EPDM	NBR	FKM	EPDM BIANCO *WHITE*	EPDM WATER				
DN 40	1"1/2	16	M876E016C68	M876N016C68	M876V016C68	M876Z016C68	M876M016C68	AM160002	166	255	5
DN 50	2"	16	M876E016C69	M876N016C69	M876V016C69	M876Z016C69	M876M016C69	AM160002	166	265	5,2
DN 65	2"1/2	16	M876E016F70	M876N016F70	M876V016F70	M876Z016F70	M876M016F70	AM160005	208	318	7,1
DN 80	3"	16	M876E016F71	M876N016F71	M876V016F71	M876Z016F71	M876M016F71	AM160005	208	326	7,5
DN 100	4"	16	M876E016H72	M876N016H72	M876V016H72	M876Z016H72	M876M016H72	AM160010	208	347	9
DN 125	5"	16	M876E016H73	M876N016H73	M876V016H73	M876Z016H73	M876M016H73	AM160010	208	360	10,5
DN 150	6"	16	M876E016L74	M876N016L74	M876V016L74	M876Z016L74	M876M016L74	AM160020	257	389	16,5
DN 200	8"	16	M876E016L75	M876N016L75	M876V016L75	M876Z016L75	M876M016L75	AM160020	257	427	21
DN 250	10"	16	M876E016N76	M876N016N76	M876V016N76	M876Z016N76	M876M016N76	AM160040	257	459	28
DN 300	12"	16	M876E016P77	M876N016P77	M876V016P77	M876Z016P77	M876M016P77	AM160050	381	556	50
DN 300	12"	10	M876E016N77	M876N016N77	M876V016N77	M876Z016N77	M876M016N77	AM160040	257	507	36

Codici con attuatore elettrico 230 Vac. *Items with electric actuator 230 Vac.*

ITEM 877
CORPO IN GHISA *DUCTIL IRON BODY*
CON ATTUATORE ELETTRICO *WITH ELECTRIC ACTUATOR*

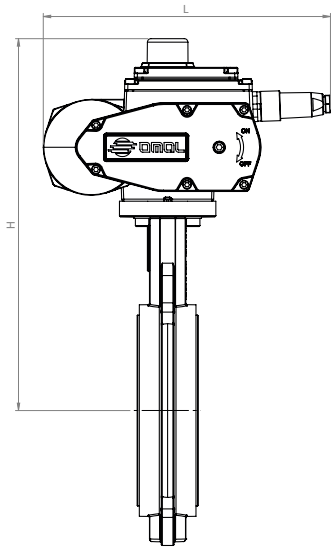

CON ATTUATORE ELETTRICO ON-OFF - LENTE IN Br-Al
WITH ON-OFF ELECTRIC ACTUATOR - Br-Al DISC

MISURA *SIZE*		ΔP max [bar]	TENUTA *LINER*			ATTUATORE *ACTUATOR*	L [mm]	H [mm]	Kg
DN [mm]	[inch]		EPDM	NBR	FKM*				
DN 50	2"	16	C877E0A5E69	C877N0A5E69	C877V0A5E69*	EA0035A5C000	250	282	6,2
DN 65	2"1/2	16	C877E0A5E70	C877N0A5E70	C877V0A5E70*	EA0035A5C000	250	291	6,6
DN 80	3"	16	C877E0A5E71	C877N0A5E71	C877V0A5E71*	EA0035A5C000	250	299	7
DN 100	4"	16	C877E0A5G72	C877N0A5G72	C877V0A5G72*	EA0070A5C000	250	320	8,5
DN 125	5"	16	C877E0A5I73	C877N0A5I73	C877V0A5I73*	EA0130A5C000	280	354	13,5
DN 150	6"	16	C877E0A5I74	C877N0A5I74	C877V0A5I74*	EA0130A5C000	280	362	15
DN 200	8"	16	C877E0A5K75	C877N0A5K75	C877V0A5K75*	EA0240A5C000	280	400	19,5
DN 250	10"	16	E877E016N76	E877N016N76	E877V016N76*	AE160040	256	459	28
DN 300	12"	16	E877E016R77	E877N016R77	E877V016R77*	AE160060	381	556	48
DN 250	10"	10	C877E0A5K76	C877N0A5K76	C877V0A5K76*	EA0240A5C000	280	432	26,5
DN 300	12"	10	E877E016N77	E877N016N77	E877V016N77*	AE160040	256	507	36

* Disponibili su richiesta. *Available upon request.*

CON ATTUATORE ELETTRICO MODULANTE - LENTE IN Br-Al
WITH ROTARY MODULAR TYPE ELECTRIC ACTUATOR - Br-Al DISC

MISURA *SIZE*		ΔP max [bar]	TENUTA *LINER*			ATTUATORE *ACTUATOR*	L [mm]	H [mm]	Kg
DN [mm]	[inch]		EPDM	NBR	FKM*				
DN 50	2"	16	M877E016C69	M877N016C69	M877V016C69*	AM160002	166	265	5,2
DN 65	2"1/2	16	M877E016F70	M877N016F70	M877V016F70*	AM160005	208	318	7,1
DN 80	3"	16	M877E016F71	M877N016F71	M877V016F71*	AM160005	208	326	7,5
DN 100	4"	16	M877E016H72	M877N016H72	M877V016H72*	AM160010	208	347	9
DN 125	5"	16	M877E016H73	M877N016H73	M877V016H73*	AM160010	208	360	10,5
DN 150	6"	16	M877E016L74	M877N016L74	M877V016L74*	AM160020	257	389	16,5
DN 200	8"	16	M877E016L75	M877N016L75	M877V016L75*	AM160020	257	427	21
DN 250	10"	16	M877E016N76	M877N016N76	M877V016N76*	AM160040	257	459	28
DN 300	12"	16	M877E016P77	M877N016P77	M877V016P77*	AM160050	381	556	50
DN 300	12"	10	M877E016N77	M877N016N77	M877V016N77*	AM160040	257	507	36

* Disponibili su richiesta. *Available upon request.*

Codici con attuatore elettrico 230 Vac. *Items with electric actuator 230 Vac.*

ITEM 875-876-877
KIT GUARNIZIONI *SEALS KIT*

KIT GUARNIZIONI *SEALS KIT*							
MISURA *SIZE*		ΔP max	EPDM	NBR	FKM	EPDM BIANCO *WHITE*	EPDM WATER
DN [mm]	[inch]	[bar]					
DN 40	1" 1/2	16	KGKE0068	KGKN0068	KGKV0068	KGKZ0068	KGKM0068
DN 50	2"	16	KGKE0069	KGKN0069	KGKV0069	KGKZ0069	KGKM0069
DN 65	2" 1/2	16	KGKE0070	KGKN0070	KGKV0070	KGKZ0070	KGKM0070
DN 80	3"	16	KGKE0071	KGKN0071	KGKV0071	KGKZ0071	KGKM0071
DN 100	4"	16	KGKE0072	KGKN0072	KGKV0072	KGKZ0072	KGKM0072
DN 125	5"	16	KGKE0073	KGKN0073	KGKV0073	KGKZ0073	KGKM0073
DN 150	6"	16	KGKE0074	KGKN0074	KGKV0074	KGKZ0074	KGKM0074
DN 200	8"	16	KGKE0075	KGKN0075	KGKV0075	KGKZ0075	KGKM0075
DN 250	10"	16	KGKE0076	KGKN0076	KGKV0076	KGKZ0076	KGKM0076
DN 300	12"	16	KGKE0077	KGKN0077	KGKV0077	KGKZ0077	KGKM0077

ITEM 875-876-877
KIT CONNESSIONE VALVOLA-ATTUATORE *VALVE-ACTUATOR CONNECTION KIT*

KIT DI CONNESSIONE VALVOLA-ATTUATORE *VALVE-ACTUATOR CONNECTION KIT*					
MISURA *SIZE*		ΔP max 10 bar		ΔP max 16 bar	
DN [mm]	[inch]	ATTUATORE *ACTUATOR*	KIT DI CONNESSIONE *CONNECTION KIT*	ATTUATORE *ACTUATOR*	KIT DI CONNESSIONE *CONNECTION KIT*
DN 40	1" 1/2	-	-	DAN0030421S	KCF046198
		-	-	SRN0030402S	KCF056215
		-	-	EA0035A5C000	KCF056215
		-	-	AM160002	KCF056215
DN 50	2"	-	-	DAN0030421S	KCF046198
		-	-	SRN0030402S	KCF056215
		-	-	EA0035A5C000	KCF056215
		-	-	AM160002	KCF056215
DN 65	2" 1/2	-	-	DAN0045422S	KCF046199
		-	-	SRN0053401S	KCF076222
		-	-	EA0035A5C000	KCF056258
		-	-	AM160005	KCE286262
DN 80	3"	-	-	DAN0045422S	KCF046199
		-	-	SRN0053401S	KCF076222
		-	-	EA0035A5C000	KCF056258
		-	-	AM160005	KCE286262
DN 100	4"	-	-	DAN0060422S	KCF056202
		-	-	SRN0060401S	KCF076224
		-	-	EA0070A5C000	KCF056202
		-	-	AM160010	KCE286263
DN 125	5"	-	-	DAN0106411S	KCF076207
		-	-	SRN0090401S	KCF106226
		-	-	EA0130A5C000	KCF076207
		-	-	AM160010	KCE286265
DN 150	6"	-	-	DAN0120411S	KCF076207
		-	-	SRN0120401S	KCF106226
		-	-	EA0130A5C000	KCF076207
		-	-	AM160020	KCE366266
DN 200	8"	DAN0180411S	KCF106210	DAN0240411S	KCF106210
		SRN0180401S	KCF106210	SRN0240401S	KCF126227
		EA0240A5C000	KCF106210	EA0240A5C000	KCF106210
		AM160020	KCE366267	AM160020	KCE366267
DN 250	10"	DAN0240411S	KCF106213	DAN0360411S	KCF106213
		SRN0240401S	KCF126214	SRN0360401S	KCF126214
		EA0240A5C000	KCF106213	AE160040	KCE366259
		AM160040	KCE366259	AM160040	KCE366259
DN 300	12"	DAN0360411S	KCF106213	DAN0480411S	KCF126214
		SRN0360401S	KCF126214	SRN0480401S	KCF146228
		AE160040	KCE366259	AE160060	KCE566260
		AM160040	KCE366259	AM160050	KCE566260

ITEM 885-886-887 KRAVEN

VALVOLA A FARFALLA IN GHISA PER MONTAGGIO TRA FLANGE TIPO "LUG"
DUCTIL IRON BUTTERFLY VALVE FOR MOUNTING BETWEEN FLANGES, "LUG" TYPE

ITEM 885
Corpo: Ghisa
Lente: Ghisa
Guarnizioni: vedere tabella

ITEM 886
Corpo: Ghisa
Lente: CF8M (316 S.S.)
Guarnizioni: vedere tabella

ITEM 887
Corpo: Ghisa
Lente: Bronzo Alluminio
Guarnizioni: vedere tabella

ITEM 885
Body: ductil iron
Disc: ductil iron
Liner: see table

ITEM 886
Body: ductil iron
Disc: CF8M (316 S.S.)
Liner: see table

ITEM 887
Body: ductil iron
Disc: Bronze Aluminium
Liner: see table

ESECUZIONI STANDARD:
- Gamma disponibile: dal DN 40 al DN 300
- Flangiatura standard: PN 10/16 dal DN 40 al DN 150;
  PN 10 dal DN 200 al DN 300.
  PN 16 dal DN 200 al DN 300.
- Requisiti generali in accordo a UNI EN593.
- Ingombri da faccia a faccia normalizzati EN 558 serie 20.
- Testa della valvola normalizzata ISO 5211.
- Tenuta secondo EN 12266-1 rate A.
- Temperatura di utilizzo per le guarnizioni:
  EPDM: da -20°C a +120°C;
  NBR: da -20°C a +80°C;
  FKM: da -12°C a +180°C;
- Pressione di utilizzo tra flange: PN 16 bar dal DN 40 al DN 150;
  PN 10 o PN 16 bar dal DN 200 al DN 300.
- Spessore rivestimento epossidico: 160 ÷ 200 µ. RAL: 5002.
- EPDM per acqua potabile da -20°C a +120°C;
- EPDM bianco da -20°C a +120°C;

STANDARD EXECUTIONS:
- *Available range: from DN 40 to DN 300*
- *Standard flanges: PN 10/16 - from DN 40 to DN 150;*
  PN 10 from DN 200 to DN 300.
  PN 16 from DN 200 to DN 300.
- *General requirements in accordance with UNI EN593.*
- *Face to face as per EN 558 serie 20.*
- *Valve head as per ISO 5211.*
- *Tightness as per EN 12266-1 rate A.*
- *Operating temperature of liners:*
  EPDM: from -20°C to +120°C;
  NBR: from -20°C to +80°C;
  FKM: from -12°C to +180°C;
- *Working pressure between flanges: PN 16 bar for DN 40 to DN 150;*
  PN 10 or PN 16 bar for DN 200 to DN 300.
- *Thickness of epoxy coating: 160 ÷ 200 µ. RAL: 5002.*
- *EPDM for potable water from -20°C to +120°C;*
- *EPDM white from -20°C to +120°C;*

ESECUZIONI A RICHIESTA:
- LUG ANSI 150 (Pmax 16 bar);
- Disco CF8M lucidato (Ra max 0.4);
- Disco bronzo alluminio e FKM;

ON REQUEST EXECUTIONS:
- *LUG ANSI 150 (Pmax 16 bar);*
- *Polished CF8M disc (Ra max 0.4);*
- *Bronze aluminium and FKM disc;*

CERTIFICAZIONI:
- Conforme alla direttiva Europea 2014/68/UE "PED".
- Dichiarazione conformità al D.M.n°174 per l'idoneità al contatto con acqua potabile e fluidi alimentari (V876).
- Versione ATEX in conformità alla Direttiva Europea 2014/34/UE.
- Certificato ATEX a richiesta.

CERTIFICATIONS:
- *According to 2014/68/EU "PED".*
- *Conformity to the italian D.M.n°174 suitable with drinking water and alimentary fluid (V876).*
- *ATEX version in conformity with European Directive 2014/34/EU.*
- *ATEX certificate on request.*

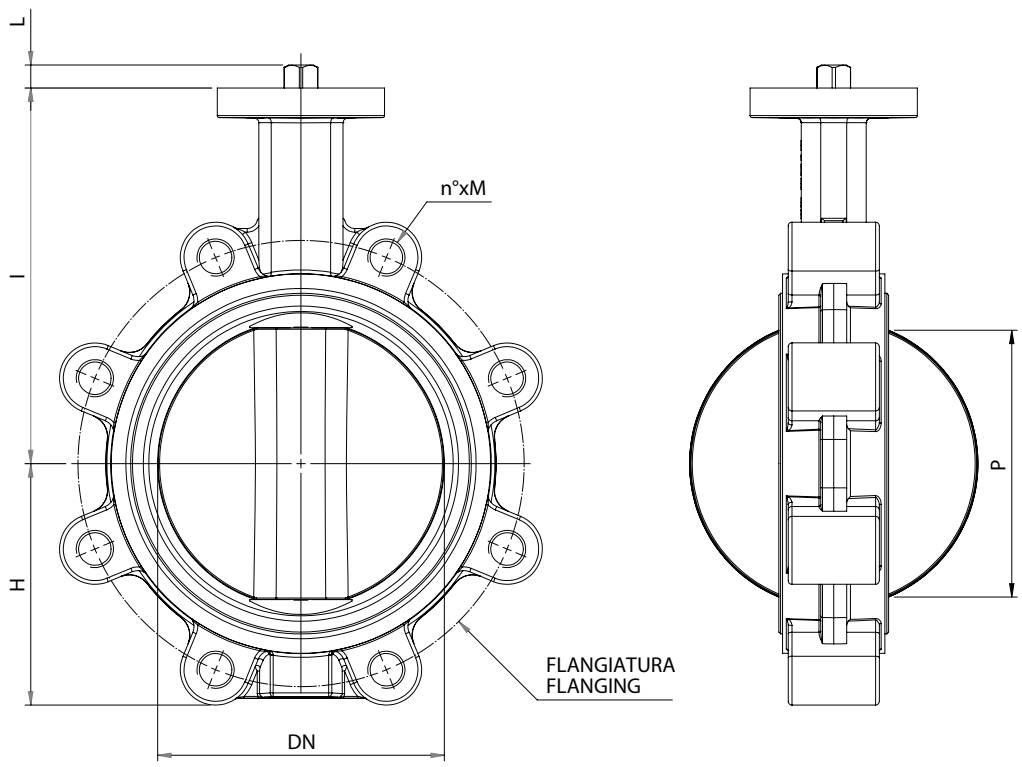

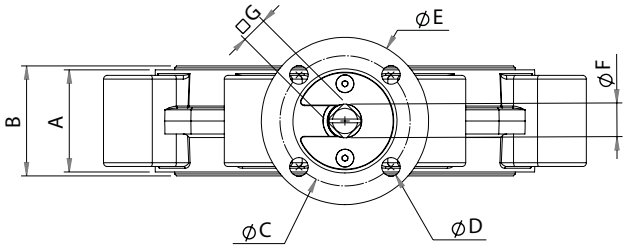

DIMENSIONI *DIMENSIONS*

MISURA *SIZE* DN [mm]	[inch]	A	B	ØC	ØD	ØE	ØF	□G	H	I	L	P	FLANGIATURA *FLANGING* PN10	PN16	ANSI 150
DN 40	1"1/2	32	35	50	8	65	12,1	9	55	133	9	29	Ø110 n4 x M16		Ø98,6 n4 x 1/2"
DN 50	2"	42	46,1	50	8	65	12,1	9	57	143	9	32	Ø125 n4 x M16		Ø120,7 n4 x 5/8"
DN 65	2"1/2	45	49,1	50	8	65	14,1	11	68	152	11	46,5	Ø145 n4 x M16		Ø139,7 n4 x 5/8"
DN 80	3"	45	48,4	50	8	65	14,1	11	82	160	11	65	Ø160 n8 x M16		Ø152,4 n4 x 5/8"
DN 100	4"	51	55,3	70	10	90	14,1	11	100	181	11	91	Ø180 n8 x M16		Ø190,5 n8 x 5/8"
DN 125	5"	55	58,8	70	10	90	18,1	14	112	194	14	111	Ø210 n8 x M16		Ø215,9 n8 x3/4"
DN 150	6"	55	59,1	70	10	90	18,1	14	126	202	14	146	Ø240 n8 x M20		Ø241,3 n8 x3/4"
DN 200	8"	59	64,1	102	12	125	22,1	17	162	240	17	195	Ø295 n8 x M20	Ø295 n12 x M20	Ø298,5 n8 x3/4"
DN 250	10"	67	71,8	102	12	125	28,2	22	193	272	22	242	Ø350 n12 x M20	Ø355 n12 x M24	Ø362 n12 x7/8"
DN 300	12"	77	81	103	12	125	28,2	22	238	320	22	293	Ø400 n12 x M20	Ø410 n12 x M24	Ø431,8 n12 x7/8"

COPPIE DI SPUNTO in Nm *BREAKAWAY TORQUES Nm*

MISURA *SIZE*	DN 40 1"1/2	DN 50 2"	DN 65 2"1/2	DN 80 3"	DN 100 4"	DN 125 5"	DN 150 6"	DN 200 8"	DN 250 10"	DN 300 12"
PN 10 bar								130	180	270
PN 16 bar	9	10	17	24	42	60	90	180	245	365
ANSI 150	9	10	17	24	42	60	90	180	245	365

I valori della coppia possono variare in funzione della temperatura e del tipo di fluido. Considerare un fattore di sicurezza pari a 1,3.
Con frequenti cicli di apertura e chiusura la coppia di manovra può diminuire sensibilmente rispetto a quella iniziale. Gli accoppiamenti attuatore/valvola, riportati nelle pagine seguenti, sono realizzati per valvole che intercettano fluidi liquidi o gassosi, puliti e per medie temperature. Per maggiori informazioni, o utilizzi diversi, consultare il nostro ufficio commerciale.

Torque can vary depending on temperature and type of fluid; a safety factor of 1.3 must be applied. Torque can drop on high frequency of operations. The actuator/valve sizing, indicated on the following pages, are based for valves to be used with liquids or gaseous fluids, clean, and for medium temperatures. For further information, or different uses please contact our sales department.

ITEM 885-886-887
CORPO IN GHISA *DUCTIL IRON BODY*
ASSE LIBERO *FREE SHAFT*

ASSE LIBERO - LENTE IN GHISA *FREE SHAFT - DUCTIL IRON BUTTERFLY*

MISURA *SIZE*		PN	TENUTA *LINER*		
DN [mm]	[inch]		EPDM	NBR	FKM
DN 50	2"	10-16	V885XE069	V885XN069	V885XV069
DN 65	2"1/2	10-16	V885XE070	V885XN070	V885XV070
DN 80	3"	10-16	V885XE071	V885XN071	V885XV071
DN 100	4"	10-16	V885XE072	V885XN072	V885XV072
DN 125	5"	10-16	V885XE073	V885XN073	V885XV073
DN 150	6"	10-16	V885XE074	V885XN074	V885XV074
DN 200	8"	10	V885KE075	V885KN075	V885KV075
DN 250	10"	10	V885KE076	V885KN076	V885KV076
DN 300	12"	10	V885KE077	V885KN077	V885KV077
DN 200	8"	16	V885FE075	V885FN075	V885FV075
DN 250	10"	16	V885FE076	V885FN076	V885FV076
DN 300	12"	16	V885FE077	V885FN077	V885FV077

ASSE LIBERO - LENTE IN INOX *FREE SHAFT - STAINLESS STEEL DISC*

MISURA *SIZE*		PN	TENUTA *LINER*				
DN [mm]	[inch]		EPDM	NBR	FKM	EPDM BIANCO *WHITE*	EPDM WATER
DN 40	1"1/2	10-16	V886XE068	V886XN068	V886XV068	V886XZ068	V886XM068
DN 50	2"	10-16	V886XE069	V886XN069	V886XV069	V886XZ069	V886XM069
DN 65	2"1/2	10-16	V886XE070	V886XN070	V886XV070	V886XZ070	V886XM070
DN 80	3"	10-16	V886XE071	V886XN071	V886XV071	V886XZ071	V886XM071
DN 100	4"	10-16	V886XE072	V886XN072	V886XV072	V886XZ072	V886XM072
DN 125	5"	10-16	V886XE073	V886XN073	V886XV073	V886XZ073	V886XM073
DN 150	6"	10-16	V886XE074	V886XN074	V886XV074	V886XZ074	V886XM074
DN 200	8"	10	V886KE075	V886KN075	V886KV075	V886KZ075	V886KM075
DN 250	10"	10	V886KE076	V886KN076	V886KV076	V886KZ076	V886KM076
DN 300	12"	10	V886KE077	V886KN077	V886KV077	V886KZ077	V886KM077
DN 200	8"	16	V886FE075	V886FN075	V886FV075	V886FZ075	V886FM075
DN 250	10"	16	V886FE076	V886FN076	V886FV076	V886FZ076	V886FM076
DN 300	12"	16	V886FE077	V886FN077	V886FV077	V886FZ077	V886FM077

ASSE LIBERO - LENTE IN Br-Al *FREE SHAFT - Br-Al DISC*

MISURA *SIZE*		PN	TENUTA *LINER*		
DN [mm]	[inch]		EPDM	NBR	FKM*
DN 50	2"	10-16	V887XE069	V887XN069	V887XV069*
DN 65	2"1/2	10-16	V887XE070	V887XN070	V887XV070*
DN 80	3"	10-16	V887XE071	V887XN071	V887XV071*
DN 100	4"	10-16	V887XE072	V887XN072	V887XV072*
DN 125	5"	10-16	V887XE073	V887XN073	V887XV073*
DN 150	6"	10-16	V887XE074	V887XN074	V887XV074*
DN 200	8"	10	V887KE075	V887KN075	V887KV075*
DN 250	10"	10	V887KE076	V887KN076	V887KV076*
DN 300	12"	10	V887KE077	V887KN077	V887KV077*
DN 200	8"	16	V887FE075	V887FN075	V887FV075*
DN 250	10"	16	V887FE076	V887FN076	V887FV076*
DN 300	12"	16	V887FE077	V887FN077	V887FV077*

* Disponibili su richiesta. *Available upon request.*

ITEM 885-886-887
CORPO IN GHISA *DUCTIL IRON BODY*
CON LEVA *WITH LEVER*

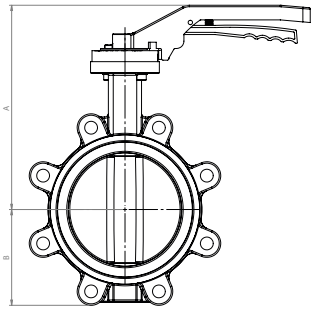

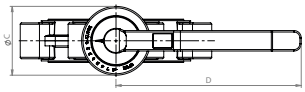

DIMENSIONI *DIMENSIONS*							
MISURA *SIZE* DN [mm]	[inch]	PN	A	B	øC	D	Kg
DN 40	1"1/2	10-16	203	54	65	190	2,5
DN 50	2"	10-16	213	57	65	190	2,8
DN 65	2"1/2	10-16	222	68	65	190	3,4
DN 80	3"	10-16	232	82	65	190	4,6
DN 100	4"	10-16	261	100	90	253	6,1
DN 125	5"	10-16	274	112	90	253	8,3
DN150	6"	10-16	282	126	90	253	10,1
DN 200	8"	10	360	162	125	360	15
DN 250	10"	10	392	193	125	360	24,5
DN 300	12"	10	440	237	125	360	31
DN 200	8"	16	360	162	125	360	16,5
DN 250	10"	16	392	193	125	360	25
DN 300	12"	16	440	237	125	360	31,5

CARATTERISTICHE DELLA LEVA
Leva con regolazione dentellata a 10 posizioni.
Materiale: alluminio;
Trattamento esterno: verniciata (poliestere);
Peso: da 0,3 a 0,9 Kg.
Lucchettabile in ogni posizione.

LEVER FEATURES
10-position lever; lockable in each position.
Material: Aluminium;
Surface coating: polyester
Weight: from 0,3 to 0,9 Kg.
Lockable in any position.

CON LEVA - LENTE IN GHISA *WITH LEVER - DUCTIL IRON DISC*

MISURA *SIZE* DN [mm]	[inch]	PN	TENUTA *LINER* EPDM	NBR	FKM	LEVA *LEVER*
DN 50	2"	10-16	L885XE069	L885XN069	L885XV069	KLW87568
DN 65	2"1/2	10-16	L885XE070	L885XN070	L885XV070	KLW87570
DN 80	3"	10-16	L885XE071	L885XN071	L885XV071	KLW87570
DN 100	4"	10-16	L885XE072	L885XN072	L885XV072	KLW87572
DN 125	5"	10-16	L885XE073	L885XN073	L885XV073	KLW87573
DN 150	6"	10-16	L885XE074	L885XN074	L885XV074	KLW87573
DN 200	8"	10	L885KE075	L885KN075	L885KV075	KLW87575
DN 250	10"	10	L885KE076	L885KN076	L885KV076	KLW87576
DN 300	12"	10	L885KE077	L885KN077	L885KV077	KLW87576
DN 200	8"	16	L885FE075	L885FN075	L885FV075	KLW87575
DN 250	10"	16	L885FE076	L885FN076	L885FV076	KLW87576
DN 300	12"	16	L885FE077	L885FN077	L885FV077	KLW87576

CON LEVA - LENTE IN INOX *WITH LEVER - STAINLESS STEEL DISC*

MISURA *SIZE* DN [mm]	[inch]	PN	TENUTA *LINER* EPDM	NBR	FKM	EPDM BIANCO *WHITE*	EPDM WATER	LEVA *LEVER*
DN 40	1"1/2	10-16	L886XE068	L886XN068	L886XV068	L886XZ068	L886XM068	KLW87568
DN 50	2"	10-16	L886XE069	L886XN069	L886XV069	L886XZ069	L886XM069	KLW87568
DN 65	2"1/2	10-16	L886XE070	L886XN070	L886XV070	L886XZ070	L886XM070	KLW87570
DN 80	3"	10-16	L886XE071	L886XN071	L886XV071	L886XZ071	L886XM071	KLW87570
DN 100	4"	10-16	L886XE072	L886XN072	L886XV072	L886XZ072	L886XM072	KLW87572
DN 125	5"	10-16	L886XE073	L886XN073	L886XV073	L886XZ073	L886XM073	KLW87573
DN 150	6"	10-16	L886XE074	L886XN074	L886XV074	L886XZ074	L886XM074	KLW87573
DN 200	8"	10	L886KE075	L886KN075	L886KV075	L886KZ075	L886KM075	KLW87575
DN 250	10"	10	L886KE076	L886KN076	L886KV076	L886KZ076	L886KM076	KLW87576
DN 300	12"	10	L886KE077	L886KN077	L886KV077	L886KZ077	L886KM077	KLW87576
DN 200	8"	16	L886FE075	L886FN075	L886FV075	L886FZ075	L886FM075	KLW87575
DN 250	10"	16	L886FE076	L886FN076	L886FV076	L886FZ076	L886FM076	KLW87576
DN 300	12"	16	L886FE077	L886FN077	L886FV077	L886FZ077	L886FM077	KLW87576

CON LEVA - LENTE IN Br-Al *WITH LEVER - Br-Al DISC*

MISURA *SIZE* DN [mm]	[inch]	PN	TENUTA *LINER* EPDM	NBR	FKM*	LEVA *LEVER*
DN 50	2"	10-16	L887XE069	L887XN069	L887XV069*	KLW87568
DN 65	2"1/2	10-16	L887XE070	L887XN070	L887XV070*	KLW87570
DN 80	3"	10-16	L887XE071	L887XN071	L887XV071*	KLW87570
DN 100	4"	10-16	L887XE072	L887XN072	L887XV072*	KLW87572
DN 125	5"	10-16	L887XE073	L887XN073	L887XV073*	KLW87573
DN 150	6"	10-16	L887XE074	L887XN074	L887XV074*	KLW87573
DN 200	8"	10	L887KE075	L887KN075	L887KV075*	KLW87575
DN 250	10"	10	L887KE076	L887KN076	L887KV076*	KLW87576
DN 300	12"	10	L887KE077	L887KN077	L887KV077*	KLW87576
DN 200	8"	16	L887FE075	L887FN075	L887FV075*	KLW87575
DN 250	10"	16	L887FE076	L887FN076	L887FV076*	KLW87576
DN 300	12"	16	L887FE077	L887FN077	L887FV077*	KLW87576

* Disponibili su richiesta. *Available upon request.*

ITEM 885-886-887
CORPO IN GHISA *DUCTIL IRON BODY*
CON RIDUTTORE *WITH GEAR BOX*

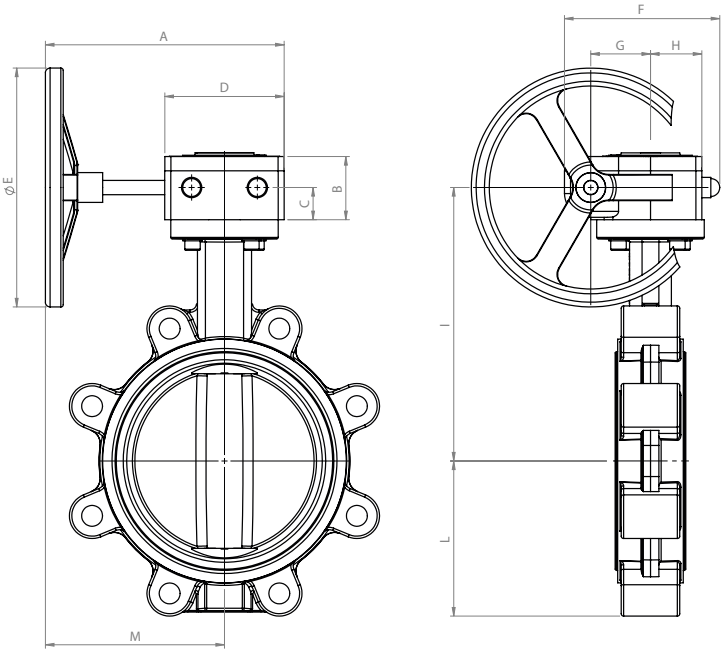

CARATTERISTICHE DEL RIDUTTORE

Meccanismo di concezione sperimentata, funzionante tramite pignone dentato e vite senza fine.
Un indicatore visivo dà la posizione della valvola.
Carter in lega di alluminio per i riduttori "RF0", in ghisa per i riduttori "RRM...".
Pignone dentato in ghisa.
Vite senza fine in acciaio trattato.
Volantino in acciaio.
Esterno trattato con vernice epossidica.

GEAR BOX FEATURES

Designed tested mechanism, working through pinion and worm.
Visual indicator gives the position of the valve
Aluminium alloy carter for the gear box "RF0 " type, cast iron for the gear box "RRM..." Type
Cast iron pinion.
Worm gear in hardened steel.
Steel wheel.
Epoxy painted external surface.

DIMENSIONI *DIMENSIONS*

MISURA *SIZE* DN [mm]	[inch]	PN	A	B	C	D	ØE	F	G	H	I	L	M	Kg
DN 40	1"1/2	10-16	200	49	24	80	140	115	42	35	159	54	160	3,6
DN 50	2"	10-16	200	49	24	80	140	115	42	35	169	57	160	3,9
DN 65	2"1/2	10-16	200	54	27	100	200	130	50	40	181	68	150	4,5
DN 80	3"	10-16	200	54	27	100	200	130	50	40	189	82	150	5,7
DN 100	4"	10-16	200	54	27	100	200	130	50	40	210	100	150	8
DN 125	5"	10-16	200	54	27	100	200	130	50	40	223	112	150	10,2
DN 150	6"	10-16	200	54	27	100	200	130	50	40	231	126	150	12
DN 200	8"	10	250	71	41	140	300	175	60	60	283	162	180	17,9
DN 250	10"	10	250	71	41	140	300	175	60	60	315	193	180	27,4
DN 300	12"	10	250	71	41	140	300	175	60	60	363	237	180	33,9
DN 200	8"	16	250	71	41	140	300	175	60	60	283	162	180	19,4
DN 250	10"	16	250	71	41	140	300	175	60	60	315	193	180	27,9
DN 300	12"	16	250	71	41	140	300	175	60	60	363	237	180	34,4

ITEM 885-886-887
CORPO IN GHISA *DUCTIL IRON BODY*
CON RIDUTTORE *WITH GEAR BOX*

CON RIDUTTORE - LENTE IN GHISA *WITH GEAR BOX - DUCTIL IRON DISC*

MISURA *SIZE*		PN	TENUTA *LINER*			RIDUTTORE *GEAR-BOX*	KIT VALVOLA-RIDUTTORE *KIT VALVE-GEAR BOX*
DN [mm]	[inch]		EPDM	NBR	FKM		
DN 50	2"	10-16	R885XE069	R885XN069	R885XV069	RF01070900	KCF046199
DN 65	2"1/2	10-16	R885XE070	R885XN070	R885XV070	RF01051100	KCF046199
DN 80	3"	10-16	R885XE071	R885XN071	R885XV071	RF01051100	KCF046199
DN 100	4"	10-16	R885XE072	R885XN072	R885XV072	RF02071400	KCF056244
DN 125	5"	10-16	R885XE073	R885XN073	R885XV073	RF02071400	KCF056248
DN 150	6"	10-16	R885XE074	R885XN074	R885XV074	RF02071400	KCF056248
DN 200	8"	10	R885KE075	R885KN075	R885KV075	RF04122200	KCF106246
DN 250	10"	10	R885KE076	R885KN076	R885KV076	RF04122200	KCF106213
DN 300	12"	10	R885KE077	R885KN077	R885KV077	RF04122200	KCF106213
DN 200	8"	16	R885FE075	R885FN075	R885FV075	RF04122200	KCF106246
DN 250	10"	16	R885FE076	R885FN076	R885FV076	RF04122200	KCF106213
DN 300	12"	16	R885FE077	R885FN077	R885FV077	RF04122200	KCF106213

CON RIDUTTORE - LENTE IN INOX *WITH GEAR BOX - STAINLESS STEEL DISC*

MISURA *SIZE*		PN	TENUTA *LINER*					RIDUTTORE *GEAR-BOX*	KIT VALVOLA-RIDUTTORE *KIT VALVE-GEAR BOX*
DN [mm]	[inch]		EPDM	NBR	FKM	EPDM BIANCO *WHITE*	EPDM WATER		
DN 40	1"1/2	10-16	R886XE068	R886XN068	R886XV068	R886XZ068	R886XM068	RF01070900	KCF046199
DN 50	2"	10-16	R886XE069	R886XN069	R886XV069	R886XZ069	R886XM069	RF01070900	KCF046199
DN 65	2"1/2	10-16	R886XE070	R886XN070	R886XV070	R886XZ070	R886XM070	RF01051100	KCF046199
DN 80	3"	10-16	R886XE071	R886XN071	R886XV071	R886XZ071	R886XM071	RF01051100	KCF046199
DN 100	4"	10-16	R886XE072	R886XN072	R886XV072	R886XZ072	R886XM072	RF02071400	KCF056244
DN 125	5"	10-16	R886XE073	R886XN073	R886XV073	R886XZ073	R886XM073	RF02071400	KCF056248
DN 150	6"	10-16	R886XE074	R886XN074	R886XV074	R886XZ074	R886XM074	RF02071400	KCF056248
DN 200	8"	10	R886KE075	R886KN075	R886KV075	R886KZ075	R886KM075	RF04122200	KCF106246
DN 250	10"	10	R886KE076	R886KN076	R886KV076	R886KZ076	R886KM076	RF04122200	KCF106213
DN 300	12"	10	R886KE077	R886KN077	R886KV077	R886KZ077	R886KM077	RF04122200	KCF106213
DN 200	8"	16	R886FE075	R886FN075	R886FV075	R886FZ075	R886FM075	RF04122200	KCF106246
DN 250	10"	16	R886FE076	R886FN076	R886FV076	R886FZ076	R886FM076	RF04122200	KCF106213
DN 300	12"	16	R886FE077	R886FN077	R886FV077	R886FZ077	R886FM077	RF04122200	KCF106213

CON RIDUTTORE - LENTE IN Br-Al *WITH GEAR BOX - Br-Al DISC*

MISURA *SIZE*		PN	TENUTA *LINER*			RIDUTTORE *GEAR-BOX*	KIT VALVOLA-RIDUTTORE *KIT VALVE-GEAR BOX*
DN [mm]	[inch]		EPDM	NBR	FKM*		
DN 50	2"	10-16	R887XE069	R887XN069	R887XV069*	RF01070900	KCF046199
DN 65	2"1/2	10-16	R887XE070	R887XN070	R887XV070*	RF01051100	KCF046199
DN 80	3"	10-16	R887XE071	R887XN071	R887XV071*	RF01051100	KCF046199
DN 100	4"	10-16	R887XE072	R887XN072	R887XV072*	RF02071400	KCF056244
DN 125	5"	10-16	R887XE073	R887XN073	R887XV073*	RF02071400	KCF056248
DN 150	6"	10-16	R887XE074	R887XN074	R887XV074*	RF02071400	KCF056248
DN 200	8"	10	R887KE075	R887KN075	R887KV075*	RF04122200	KCF106246
DN 250	10"	10	R887KE076	R887KN076	R887KV076*	RF04122200	KCF106213
DN 300	12"	10	R887KE077	R887KN077	R887KV077*	RF04122200	KCF106213
DN 200	8"	16	R887FE075	R887FN075	R887FV075*	RF04122200	KCF106246
DN 250	10"	16	R887FE076	R887FN076	R887FV076*	RF04122200	KCF106213
DN 300	12"	16	R887FE077	R887FN077	R887FV077*	RF04122200	KCF106213

* Disponibili su richiesta. *Available upon request.*

ITEM 885
CORPO IN GHISA *DUCTIL IRON BODY*
CON ATTUATORE PNEUMATICO *WITH PNEUMATIC ACTUATOR*

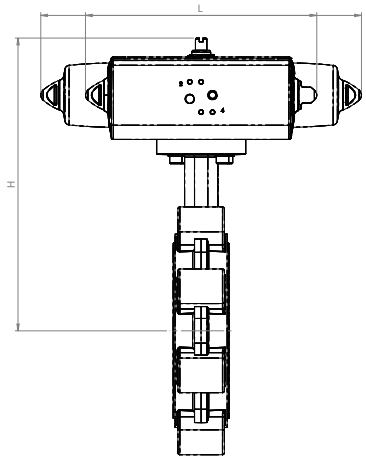

CON ATTUATORE PNEUMATICO DOPPIO EFFETTO - LENTE IN GHISA
WITH DOUBLE ACTING PNEUMATIC ACTUATOR - DUCTIL IRON DISC

MISURA *SIZE*		PN	TENUTA *LINER*			ATTUATORE *ACTUATOR*	L [mm]	H [mm]	Kg
DN [mm]	[inch]		EPDM	NBR	FKM				
DN 50	2"	10-16	DG885XE069	DG885XN069	DG885XV069	DAN0030421S	175	218	3,9
DN 65	2"1/2	10-16	DG885XE070	DG885XN070	DG885XV070	DAN0045422S	189	239	4,7
DN 80	3"	10-16	DG885XE071	DG885XN071	DG885XV071	DAN0045422S	189	247	5,9
DN 100	4"	10-16	DG885XE072	DG885XN072	DG885XV072	DAN0060422S	198	274	7,7
DN 125	5"	10-16	DG885XE073	DG885XN073	DG885XV073	DAN0106411S	237	300	10,8
DN 150	6"	10-16	DG885XE074	DG885XN074	DG885XV074	DAN0120411S	245	311	12,7
DN 200	8"	10	DG885KE075	DG885KN075	DG885KV075	DAN0180411S	290	380	21
DN 250	10"	10	DG885KE076	DG885KN076	DG885KV076	DAN0240411S	314	416	31
DN 300	12"	10	DG885KE077	DG885KN077	DG885KV077	DAN0360411S	340	470	37,5
DN 200	8"	16	DG885FE075	DG885FN075	DG885FV075	DAN0240411S	314	384	22
DN 250	10"	16	DG885FE076	DG885FN076	DG885FV076	DAN0360411S	340	422	32
DN 300	12"	16	DG885FE077	DG885FN077	DG885FV077	DAN0480411S	389	487	40,5

CON ATTUATORE PNEUMATICO SEMPLICE EFFETTO - LENTE IN GHISA
WITH SPRING RETURN PNEUMATIC ACTUATOR - DUCTIL IRON DISC

MISURA *SIZE*		PN	TENUTA *LINER*			ATTUATORE *ACTUATOR*	L [mm]	H [mm]	Kg
DN [mm]	[inch]		EPDM	NBR	FKM				
DN 50	2"	10-16	SG885XE069	SG885XN069	SG885XV069	SRN0030402S	259	236	5
DN 65	2"1/2	10-16	SG885XE070	SG885XN070	SG885XV070	SRN0053401S	305	258	6,5
DN 80	3"	10-16	SG885XE071	SG885XN071	SG885XV071	SRN0053401S	305	266	7,7
DN 100	4"	10-16	SG885XE072	SG885XN072	SG885XV072	SRN0060401S	339	290	9,6
DN 125	5"	10-16	SG885XE073	SG885XN073	SG885XV073	SRN0090401S	394	334	14,5
DN 150	6"	10-16	SG885XE074	SG885XN074	SG885XV074	SRN0120401S	410	346	17
DN 200	8"	10	SG885KE075	SG885KN075	SG885KV075	SRN0180401S	474	390	25,5
DN 250	10"	10	SG885KE076	SG885KN076	SG885KV076	SRN0240401S	521	439	37,5
DN 300	12"	10	SG885KE077	SG885KN077	SG885KV077	SRN0360401S	613	500	48
DN 200	8"	16	SG885FE075	SG885FN075	SG885FV075	SRN0240401S	521	407	28,5
DN 250	10"	16	SG885FE076	SG885FN076	SG885FV076	SRN0360401S	613	452	42,5
DN 300	12"	16	SG885FE077	SG885FN077	SG885FV077	SRN0480401S	649	520	54

Dimensionamento degli attuatori pneumatici fatto considerando una pressione minima di alimentazione pari a 5,6 barg.
Sizing of pneumatic actuators by minimum pressure rate 5,6 barg.

ITEM 886
CORPO IN GHISA *DUCTIL IRON BODY*
CON ATTUATORE PNEUMATICO *WITH PNEUMATIC ACTUATOR*

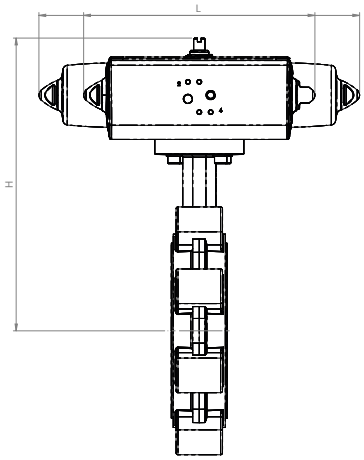

CON ATTUATORE PNEUMATICO DOPPIO EFFETTO - LENTE IN INOX
WITH DOUBLE ACTING PNEUMATIC ACTUATOR - STAINLESS STEEL DISC

MISURA *SIZE*		PN	TENUTA *LINER*					ATTUATORE *ACTUATOR*	L [mm]	H [mm]	Kg
DN [mm]	[inch]		EPDM	NBR	FKM	EPDM BIANCO *WHITE*	EPDM WATER				
DN 40	1"1/2	10-16	DG886XE068	DG886XN068	DG886XV068	DG886XZ068	DG886XM068	DAN0030421S	175	208	3,5
DN 50	2"	10-16	DG886XE069	DG886XN069	DG886XV069	DG886XZ069	DG886XM069	DAN0030421S	175	218	3,9
DN 65	2"1/2	10-16	DG886XE070	DG886XN070	DG886XV070	DG886XZ070	DG886XM070	DAN0045422S	189	239	4,7
DN 80	3"	10-16	DG886XE071	DG886XN071	DG886XV071	DG886XZ071	DG886XM071	DAN0045422S	189	247	5,9
DN 100	4"	10-16	DG886XE072	DG886XN072	DG886XV072	DG886XZ072	DG886XM072	DAN0060422S	198	274	7,7
DN 125	5"	10-16	DG886XE073	DG886XN073	DG886XV073	DG886XZ073	DG886XM073	DAN0106411S	237	300	10,8
DN 150	6"	10-16	DG886XE074	DG886XN074	DG886XV074	DG886XZ074	DG886XM074	DAN0120411S	245	311	12,7
DN 200	8"	10	DG886KE075	DG886KN075	DG886KV075	DG886KZ075	DG886KM075	DAN0180411S	290	380	21
DN 250	10"	10	DG886KE076	DG886KN076	DG886KV076	DG886KZ076	DG886KM076	DAN0240411S	314	416	31
DN 300	12"	10	DG886KE077	DG886KN077	DG886KV077	DG886KZ077	DG886KM077	DAN0360411S	340	470	37,5
DN 200	8"	16	DG886FE075	DG886FN075	DG886FV075	DG886FZ075	DG886FM075	DAN0240411S	314	384	22
DN 250	10"	16	DG886FE076	DG886FN076	DG886FV076	DG886FZ076	DG886FM076	DAN0360411S	340	422	32
DN 300	12"	16	DG886FE077	DG886FN077	DG886FV077	DG886FZ077	DG886FM077	DAN0480411S	389	487	40,5

CON ATTUATORE PNEUMATICO SEMPLICE EFFETTO - LENTE IN INOX
WITH SPRING RETURN PNEUMATIC ACTUATOR - STAINLESS STEEL DISC

MISURA *SIZE*		PN	TENUTA *LINER*					ATTUATORE *ACTUATOR*	L [mm]	H [mm]	Kg
DN [mm]	[inch]		EPDM	NBR	FKM	EPDM BIANCO *WHITE*	EPDM WATER				
DN 40	1"1/2	10-16	SG886XE068	SG886XN068	SG886XV068	SG886XZ068	SG886XM068	SRN0030402S	259	226	4,5
DN 50	2"	10-16	SG886XE069	SG886XN069	SG886XV069	SG886XZ069	SG886XM069	SRN0030402S	259	236	5
DN 65	2"1/2	10-16	SG886XE070	SG886XN070	SG886XV070	SG886XZ070	SG886XM070	SRN0053401S	305	258	6,5
DN 80	3"	10-16	SG886XE071	SG886XN071	SG886XV071	SG886XZ071	SG886XM071	SRN0053401S	305	266	7,7
DN 100	4"	10-16	SG886XE072	SG886XN072	SG886XV072	SG886XZ072	SG886XM072	SRN0060401S	339	290	9,6
DN 125	5"	10-16	SG886XE073	SG886XN073	SG886XV073	SG886XZ073	SG886XM073	SRN0090401S	394	334	14,5
DN 150	6"	10-16	SG886XE074	SG886XN074	SG886XV074	SG886XZ074	SG886XM074	SRN0120401S	410	346	17
DN 200	8"	10	SG886KE075	SG886KN075	SG886KV075	SG886KZ075	SG886KM075	SRN0180401S	474	390	25,5
DN 250	10"	10	SG886KE076	SG886KN076	SG886KV076	SG886KZ076	SG886KM076	SRN0240401S	521	439	37,5
DN 300	12"	10	SG886KE077	SG886KN077	SG886KV077	SG886KZ077	SG886KM077	SRN0360401S	613	500	48
DN 200	8"	16	SG886FE075	SG886FN075	SG886FV075	SG886FZ075	SG886FM075	SRN0240401S	521	407	28,5
DN 250	10"	16	SG886FE076	SG886FN076	SG886FV076	SG886FZ076	SG886FM076	SRN0360401S	613	452	42,5
DN 300	12"	16	SG886FE077	SG886FN077	SG886FV077	SG886FZ077	SG886FM077	SRN0480401S	649	520	54

Dimensionamento degli attuatori pneumatici fatto considerando una pressione minima di alimentazione pari a 5,6 barg. *Sizing of pneumatic actuators by minimum pressure rate 5,6 barg.*

ITEM 887
CORPO IN GHISA *DUCTIL IRON BODY*
CON ATTUATORE PNEUMATICO *WITH PNEUMATIC ACTUATOR*

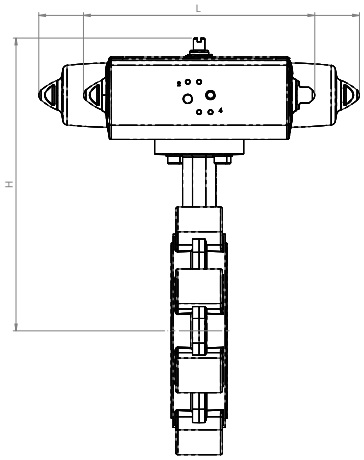

CON ATTUATORE PNEUMATICO DOPPIO EFFETTO - LENTE IN Br-Al
WITH DOUBLE ACTING PNEUMATIC ACTUATOR - Br-Al DISC

MISURA *SIZE*		PN	TENUTA *LINER*			ATTUATORE *ACTUATOR*	L [mm]	H [mm]	Kg
DN [mm]	[inch]		EPDM	NBR	FKM*				
DN 50	2"	10-16	DG887XE069	DG887XN069	DG887XV069*	DAN0030421S	175	218	3,9
DN 65	2"1/2	10-16	DG887XE070	DG887XN070	DG887XV070*	DAN0045422S	189	239	4,7
DN 80	3"	10-16	DG887XE071	DG887XN071	DG887XV071*	DAN0045422S	189	247	5,9
DN 100	4"	10-16	DG887XE072	DG887XN072	DG887XV072*	DAN0060422S	198	274	7,7
DN 125	5"	10-16	DG887XE073	DG887XN073	DG887XV073*	DAN0106411S	237	300	10,8
DN 150	6"	10-16	DG887XE074	DG887XN074	DG887XV074*	DAN0120411S	245	311	12,7
DN 200	8"	10	DG887KE075	DG887KN075	DG887KV075*	DAN0180411S	290	380	21
DN 250	10"	10	DG887KE076	DG887KN076	DG887KV076*	DAN0240411S	314	416	31
DN 300	12"	10	DG887KE077	DG887KN077	DG887KV077*	DAN0360411S	340	470	37,5
DN 200	8"	16	DG887FE075	DG887FN075	DG887FV075*	DAN0240411S	314	384	22
DN 250	10"	16	DG887FE076	DG887FN076	DG887FV076*	DAN0360411S	340	422	32
DN 300	12"	16	DG887FE077	DG887FN077	DG887FV077*	DAN0480411S	389	487	40,5

* Disponibili su richiesta. *Available upon request.*

CON ATTUATORE PNEUMATICO SEMPLICE EFFETTO - LENTE IN Br-Al
WITH SPRING RETURN PNEUMATIC ACTUATOR - Br-Al DISC

MISURA *SIZE*		PN	TENUTA *LINER*			ATTUATORE *ACTUATOR*	L [mm]	H [mm]	Kg
DN [mm]	[inch]		EPDM	NBR	FKM*				
DN 50	2"	10-16	SG887XE069	SG887XN069	SG887XV069*	SRN0030402S	259	236	5
DN 65	2"1/2	10-16	SG887XE070	SG887XN070	SG887XV070*	SRN0053401S	305	258	6,5
DN 80	3"	10-16	SG887XE071	SG887XN071	SG887XV071*	SRN0053401S	305	266	7,7
DN 100	4"	10-16	SG887XE072	SG887XN072	SG887XV072*	SRN0060401S	339	290	9,6
DN 125	5"	10-16	SG887XE073	SG887XN073	SG887XV073*	SRN0090401S	394	334	14,5
DN 150	6"	10-16	SG887XE074	SG887XN074	SG887XV074*	SRN0120401S	410	346	17
DN 200	8"	10	SG887KE075	SG887KN075	SG887KV075*	SRN0180401S	474	390	25,5
DN 250	10"	10	SG887KE076	SG887KN076	SG887KV076*	SRN0240401S	521	439	37,5
DN 300	12"	10	SG887KE077	SG887KN077	SG887KV077*	SRN0360401S	613	500	48
DN 200	8"	16	SG887FE075	SG887FN075	SG887FV075*	SRN0240401S	521	407	28,5
DN 250	10"	16	SG887FE076	SG887FN076	SG887FV076*	SRN0360401S	613	452	42,5
DN 300	12"	16	SG887FE077	SG887FN077	SG887FV077*	SRN0480401S	649	520	54

* Disponibili su richiesta. *Available upon request.*

Dimensionamento degli attuatori pneumatici fatto considerando una pressione minima di alimentazione pari a 5,6 barg.
Sizing of pneumatic actuators by minimum pressure rate 5,6 barg.

ITEM 885
CORPO IN GHISA *DUCTIL IRON BODY*
CON ATTUATORE ELETTRICO *WITH ELECTRIC ACTUATOR*

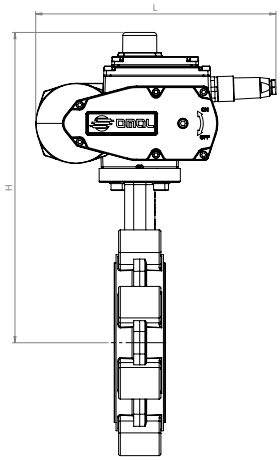

CON ATTUATORE ELETTRICO ON-OFF - LENTE IN GHISA
WITH ON-OFF ELECTRIC ACTUATOR - DUCTIL IRON DISC

MISURA *SIZE*		PN	TENUTA *LINER*			ATTUATORE *ACTUATOR*	L [mm]	H [mm]	Kg
DN [mm]	[inch]		EPDM	NBR	FKM				
DN 50	2"	10-16	C885E0A5E69	C885N0A5E69	C885V0A5E69	EA0035A5C000	250	282	6,9
DN 65	2"1/2	10-16	C885E0A5E70	C885N0A5E70	C885V0A5E70	EA0035A5C000	250	291	7,5
DN 80	3"	10-16	C885E0A5E71	C885N0A5E71	C885V0A5E71	EA0035A5C000	250	299	8,7
DN 100	4"	10-16	C885E0A5G72	C885N0A5G72	C885V0A5G72	EA0070A5C000	250	320	10
DN 125	5"	10-16	C885E0A5I73	C885N0A5I73	C885V0A5I73	EA0130A5C000	280	354	16
DN 150	6"	10-16	C885E0A5I74	C885N0A5I74	C885V0A5I74	EA0130A5C000	280	362	17,5
DN 200	8"	10	C885KE0A5K75	C885KN0A5K75	C885KV0A5K75	EA0240A5C000	280	400	24
DN 250	10"	10	C885KE0A5K76	C885KN0A5K76	C885KV0A5K76	EA0240A5C000	280	432	33
DN 300	12"	10	E885KE0A5N77	E885KN0A5N77	E885KV0A5N77	AE160040	256	507	40
DN 200	8"	16	C885FE0A5K75	C885FN0A5K75	C885FV0A5K75	EA0240A5C000	280	400	24
DN 250	10"	16	E885FE0A5N76	E885FN0A5N76	E885FV0A5N76	AE160040	256	459	34,5
DN 300	12"	16	E885FE0A5R77	E885FN0A5R77	E885FV0A5R77	AE160060	381	556	52

CON ATTUATORE ELETTRICO MODULANTE - LENTE IN GHISA
WITH ROTARY MODULAR TYPE ELECTRIC ACTUATOR - DUCTIL IRON DISC

MISURA *SIZE*		PN	TENUTA *LINER*			ATTUATORE *ACTUATOR*	L [mm]	H [mm]	Kg
DN [mm]	[inch]		EPDM	NBR	FKM				
DN 50	2"	10-16	M885E016C69	M885N016C69	M885V016C69	AM160002	166	265	6
DN 65	2"1/2	10-16	M885E016F70	M885N016F70	M885V016F70	AM160005	208	318	8
DN 80	3"	10-16	M885E016F71	M885N016F71	M885V016F71	AM160005	208	326	9,3
DN 100	4"	10-16	M885E016H72	M885N016H72	M885V016H72	AM160010	208	347	10,6
DN 125	5"	10-16	M885E016H73	M885N016H73	M885V016H73	AM160010	208	360	13
DN 150	6"	10-16	M885E016L74	M885N016L74	M885V016L74	AM160020	257	389	19
DN 200	8"	10	M885KE016L75	M885KN016L75	M885KV016L75	AM160020	257	427	25,5
DN 250	10"	10	M885KE016N76	M885KN016N76	M885KV016N76	AM160040	257	459	34,5
DN 300	12"	10	M885KE016N77	M885KN016N77	M885KV016N77	AM160040	257	507	40
DN 200	8"	16	M885FE016L75	M885FN016L75	M885FV016L75	AM160020	257	427	25,5
DN 250	10"	16	M885FE016N76	M885FN016N76	M885FV016N76	AM160040	257	459	34,5
DN 300	12"	16	M885FE016P77	M885FN016P77	M885FV016P77	AM160050	381	556	54

Codici con attuatore elettrico 230 Vac. *Items with electric actuator 230 Vac.*

ITEM 886
CORPO IN GHISA *DUCTIL IRON BODY*
CON ATTUATORE ELETTRICO *WITH ELECTRIC ACTUATOR*

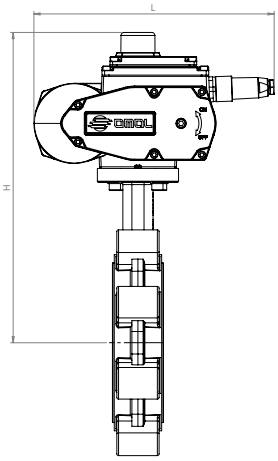

CON ATTUATORE ELETTRICO ON-OFF - LENTE IN INOX
WITH ON-OFF ELECTRIC ACTUATOR - STAINLESS STEEL DISC

MISURA *SIZE*		PN	TENUTA *LINER*					ATTUATORE *ACTUATOR*	L [mm]	H [mm]	Kg
DN [mm]	[inch]		EPDM	NBR	FKM	EPDM BIANCO *WHITE*	EPDM WATER				
DN 40	1"1/2	10-16	C886E0A5E68	C886N0A5E68	C886V0A5E68	C886Z0A5E68	C886M0A5E68	EA0035A5C000	250	272	6,5
DN 50	2"	10-16	C886E0A5E69	C886N0A5E69	C886V0A5E69	C886Z0A5E69	C886M0A5E69	EA0035A5C000	250	282	6,9
DN 65	2"1/2	10-16	C886E0A5E70	C886N0A5E70	C886V0A5E70	C886Z0A5E70	C886M0A5E70	EA0035A5C000	250	291	7,5
DN 80	3"	10-16	C886E0A5E71	C886N0A5E71	C886V0A5E71	C886Z0A5E71	C886M0A5E71	EA0035A5C000	250	299	8,7
DN 100	4"	10-16	C886E0A5G72	C886N0A5G72	C886V0A5G72	C886Z0A5G72	C886M0A5G72	EA0070A5C000	250	320	10
DN 125	5"	10-16	C886E0A5I73	C886N0A5I73	C886V0A5I73	C886Z0A5I73	C886M0A5I73	EA0130A5C000	280	354	16
DN 150	6"	10-16	C886E0A5I74	C886N0A5I74	C886V0A5I74	C886Z0A5I74	C886M0A5I74	EA0130A5C000	280	362	17,5
DN 200	8"	10	C886KE0A5K75	C886KN0A5K75	C886KV0A5K75	C886KZ0A5K75	C886KM0A5K75	EA0240A5C000	280	400	24
DN 250	10"	10	C886KE0A5K76	C886KN0A5K76	C886KV0A5K76	C886KZ0A5K76	C886KM0A5K76	EA0240A5C000	280	432	33
DN 300	12"	10	E886KE0A5N77	E886KN0A5N77	E886KV0A5N77	E886KZ0A5N77	E886KM0A5N77	AE160040	256	507	40
DN 200	8"	16	C886FE0A5K75	C886FN0A5K75	C886FV0A5K75	C886FZ0A5K75	C886FM0A5K75	EA0240A5C000	280	400	24
DN 250	10"	16	E886FE0A5N76	E886FN0A5N76	E886FV0A5N76	E886FZ0A5N76	E886FM0A5N76	AE160040	256	459	34,5
DN 300	12"	16	E886FE0A5R77	E886FN0A5R77	E886FV0A5R77	E886FZ0A5R77	E886FM0A5R77	AE160060	381	556	52

CON ATTUATORE ELETTRICO MODULANTE - LENTE IN INOX
WITH ROTARY MODULAR TYPE ELECTRIC ACTUATOR - STAINLESS STEEL DISC

MISURA *SIZE*		PN	TENUTA *LINER*					ATTUATORE *ACTUATOR*	L [mm]	H [mm]	Kg
DN [mm]	[inch]		EPDM	NBR	FKM	EPDM BIANCO *WHITE*	EPDM WATER				
DN 40	1"1/2	10-16	M886E016C68	M886N016C68	M886V016C68	M886Z016C68	M886M016C68	AM160002	166	255	5,6
DN 50	2"	10-16	M886E016C69	M886N016C69	M886V016C69	M886Z016C69	M886M016C69	AM160002	166	265	6
DN 65	2"1/2	10-16	M886E016F70	M886N016F70	M886V016F70	M886Z016F70	M886M016F70	AM160005	208	318	8
DN 80	3"	10-16	M886E016F71	M886N016F71	M886V016F71	M886Z016F71	M886M016F71	AM160005	208	326	9,3
DN 100	4"	10-16	M886E016H72	M886N016H72	M886V016H72	M886Z016H72	M886M016H72	AM160010	208	347	10,6
DN 125	5"	10-16	M886E016H73	M886N016H73	M886V016H73	M886Z016H73	M886M016H73	AM160010	208	360	13
DN 150	6"	10-16	M886E016L74	M886N016L74	M886V016L74	M886Z016L74	M886M016L74	AM160020	257	389	19
DN 200	8"	10	M886KE016L75	M886KN016L75	M886KV016L75	M886KZ016L75	M886KM016L75	AM160020	257	427	25,5
DN 250	10"	10	M886KE016N76	M886KN016N76	M886KV016N76	M886KZ016N76	M886KM016N76	AM160040	257	459	34,5
DN 300	12"	10	M886KE016N77	M886KN016N77	M886KV016N77	M886KZ016N77	M886KM016N77	AM160040	257	507	40
DN 200	8"	16	M886FE016L75	M886FN016L75	M886FV016L75	M886FZ016L75	M886FM016L75	AM160020	257	427	25,5
DN 250	10"	16	M886FE016N76	M886FN016N76	M886FV016N76	M886FZ016N76	M886FM016N76	AM160040	257	459	34,5
DN 300	12"	16	M886FE016P77	M886FN016P77	M886FV016P77	M886FZ016P77	M886FM016P77	AM160050	381	556	54

Codici con attuatore elettrico 230 Vac. *Items with electric actuator 230 Vac.*

ITEM 887
CORPO IN GHISA *DUCTIL IRON BODY*
CON ATTUATORE ELETTRICO *WITH ELECTRIC ACTUATOR*

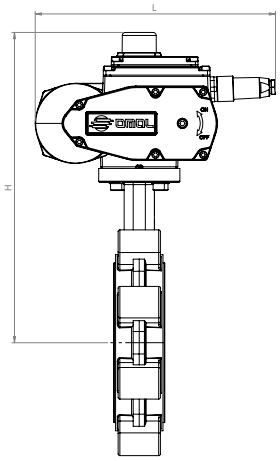

CON ATTUATORE ELETTRICO ON-OFF - LENTE IN Br-Al
WITH ON-OFF ELECTRIC ACTUATOR - Br-Al DISC

MISURA *SIZE*		PN	TENUTA *LINER*			ATTUATORE *ACTUATOR*	L [mm]	H [mm]	Kg
DN [mm]	[inch]		EPDM	NBR	FKM*				
DN 50	2"	10-16	C887E0A5E69	C887N0A5E69	C887V0A5E69*	EA0035A5C000	250	282	6,9
DN 65	2"1/2	10-16	C887E0A5E70	C887N0A5E70	C887V0A5E70*	EA0035A5C000	250	291	7,5
DN 80	3"	10-16	C887E0A5E71	C887N0A5E71	C887V0A5E71*	EA0035A5C000	250	299	8,7
DN 100	4"	10-16	C887E0A5G72	C887N0A5G72	C887V0A5G72*	EA0070A5C000	250	320	10
DN 125	5"	10-16	C887E0A5I73	C887N0A5I73	C887V0A5I73*	EA0130A5C000	280	354	16
DN 150	6"	10-16	C887E0A5I74	C887N0A5I74	C887V0A5I74*	EA0130A5C000	280	362	17,5
DN 200	8"	10	C887KE0A5K75	C887KN0A5K75	C887KV0A5K75*	EA0240A5C000	280	400	24
DN 250	10"	10	C887KE0A5K76	C887KN0A5K76	C887KV0A5K76*	EA0240A5C000	280	432	33
DN 300	12"	10	E887KE0A5N77	E887KN0A5N77	E887KV0A5N77*	AE160040	256	507	40
DN 200	8"	16	C887FE0A5K75	C887FN0A5K75	C887FV0A5K75*	EA0240A5C000	280	400	24
DN 250	10"	16	E887FE0A5N76	E887FN0A5N76	E887FV0A5N76*	AE160040	256	459	34,5
DN 300	12"	16	E887FE0A5R77	E887FN0A5R77	E887FV0A5R77*	AE160060	381	556	52

* Disponibili su richiesta. *Available upon request.*

CON ATTUATORE ELETTRICO MODULANTE - LENTE IN Br-Al
WITH ROTARY MODULAR TYPE ELECTRIC ACTUATOR - Br-Al DISC

MISURA *SIZE*		PN	TENUTA *LINER*			ATTUATORE *ACTUATOR*	L [mm]	H [mm]	Kg
DN [mm]	[inch]		EPDM	NBR	FKM*				
DN 50	2"	10-16	M887E016C69	M887N016C69	M887V016C69*	AM160002	166	265	6
DN 65	2"1/2	10-16	M887E016F70	M887N016F70	M887V016F70*	AM160005	208	318	8
DN 80	3"	10-16	M887E016F71	M887N016F71	M887V016F71*	AM160005	208	326	9,3
DN 100	4"	10-16	M887E016H72	M887N016H72	M887V016H72*	AM160010	208	347	10,6
DN 125	5"	10-16	M887E016H73	M887N016H73	M887V016H73*	AM160010	208	360	13
DN 150	6"	10-16	M887E016L74	M887N016L74	M887V016L74*	AM160020	257	389	19
DN 200	8"	10	M887KE016L75	M887KN016L75	M887KV016L75*	AM160020	257	427	25,5
DN 250	10"	10	M887KE016N76	M887KN016N76	M887KV016N76*	AM160040	257	459	34,5
DN 300	12"	10	M887KE016N77	M887KN016N77	M887KV016N77*	AM160040	257	507	40
DN 200	8"	16	M887FE016L75	M887FN016L75	M887FV016L75*	AM160020	257	427	25,5
DN 250	10"	16	M887FE016N76	M887FN016N76	M887FV016N76*	AM160040	257	459	34,5
DN 300	12"	16	M887FE016P77	M887FN016P77	M887FV016P77*	AM160050	381	556	54

* Disponibili su richiesta. *Available upon request.*

Codici con attuatore elettrico 230 Vac. *Items with electric actuator 230 Vac.*

ITEM 885-886-887
KIT GUARNIZIONI *SEALS KIT*

KIT GUARNIZIONI *SEALS KIT*							
MISURA *SIZE*		ΔP max	EPDM	NBR	FKM	EPDM BIANCO *WHITE*	EPDM WATER
DN [mm]	[inch]	[bar]					
DN 40	1" 1/2	10-16	KGKE0068	KGKN0068	KGKV0068	KGKZ0068	KGKM0068
DN 50	2"	10-16	KGKE0069	KGKN0069	KGKV0069	KGKZ0069	KGKM0069
DN 65	2" 1/2	10-16	KGKE0070	KGKN0070	KGKV0070	KGKZ0070	KGKM0070
DN 80	3"	10-16	KGKE0071	KGKN0071	KGKV0071	KGKZ0071	KGKM0071
DN 100	4"	10-16	KGKE0072	KGKN0072	KGKV0072	KGKZ0072	KGKM0072
DN 125	5"	10-16	KGKE0073	KGKN0073	KGKV0073	KGKZ0073	KGKM0073
DN 150	6"	10-16	KGKE0074	KGKN0074	KGKV0074	KGKZ0074	KGKM0074
DN 200	8"	10-16	KGKE0075	KGKN0075	KGKV0075	KGKZ0075	KGKM0075
DN 250	10"	10-16	KGKE0076	KGKN0076	KGKV0076	KGKZ0076	KGKM0076
DN 300	12"	10-16	KGKE0077	KGKN0077	KGKV0077	KGKZ0077	KGKM0077

ITEM 885-886-887
KIT CONNESSIONE VALVOLA-ATTUATORE *VALVE-ACTUATOR CONNECTION KIT*

KIT DI CONNESSIONE VALVOLA-ATTUATORE *VALVE-ACTUATOR CONNECTION KIT*				
MISURA *SIZE*		PN	ATTUATORE *ACTUATOR*	KIT DI CONNESSIONE *CONNECTION KIT*
DN [mm]	[inch]			
DN 40	1" 1/2	10-16	DAN0030421S	KCF046198
			SRN0030402S	KCF056215
			EA0035A5C000	KCF056215
			AM160002	KCF056215
DN 50	2"	10-16	DAN0030421S	KCF046198
			SRN0030402S	KCF056215
			EA0035A5C000	KCF056215
			AM160002	KCF056215
DN 65	2" 1/2	10-16	DAN0045422S	KCF046199
			SRN0053401S	KCF076222
			EA0035A5C000	KCF056258
			AM160005	KCE286262
DN 80	3"	10-16	DAN0045422S	KCF046199
			SRN0053401S	KCF076222
			EA0035A5C000	KCF056258
			AM160005	KCE286262
DN 100	4"	10-16	DAN0060422S	KCF056202
			SRN0060401S	KCF076224
			EA0070A5C000	KCF056202
			AM160010	KCE286263
DN 125	5"	10-16	DAN0106411S	KCF076207
			SRN0090401S	KCF106226
			EA0130A5C000	KCF076207
			AM160010	KCE286265
DN 150	6"	10-16	DAN0120411S	KCF076207
			SRN0120401S	KCF106226
			EA0130A5C000	KCF076207
			AM160020	KCE366266
DN 200	8"	10	DAN0180411S	KCF106210
			SRN0180401S	KCF106210
			EA0240A5C000	KCF106210
			AM160020	KCE366267
DN 250	10"	10	DAN0240411S	KCF106213
			SRN0240401S	KCF126214
			EA0240A5C000	KCF106213
			AM160040	KCE366259
DN 300	12"	10	DAN0360411S	KCF106213
			SRN0360401S	KCF126214
			AE160040	KCE366259
			AM160040	KCE366259
DN 200	8"	16	DAN0240411S	KCF106210
			SRN0240401S	KCF126227
			EA0240A5C000	KCF106210
			AM160020	KCE366267
DN 250	10"	16	DAN0360411S	KCF106213
			SRN0360401S	KCF126214
			AE160040	KCE366259
			AM160040	KCE366259
DN 300	12"	16	DAN0480411S	KCF126214
			SRN0480401S	KCF146228
			AE160060	KCE566260
			AM160050	KCE566260

DNV

FULL QUALITY ASSURANCE CERTIFICATE

Certificate No.: CS39822 Rev.00
Initial date: 01 January 2023
Validity: 01 January 2026 – 31 December 2028

This certificate consists of 3 pages

This is to certify that the products manufactured by:

OMAL S.p.A.
Via Ponte Nuovo, 11 - 25050 Rodengo Saiano (BS) - Italy

have been assessed with respect to the conformity assessment procedure described in:
ANNEX III MODULE H OF DIRECTIVE 2014/68/EU ON PRESSURE EQUIPMENT

and found to comply with the requirements in Annex I – Essential Safety Requirements of the Directive.

The certificate is valid for the following products:

Type of Pressure Equipment: **Pressure Accessory**
Product Name: **Ball valves, high pressure ball valves, butterfly valves, pneumatic valves.**

Place and date: **Vimercate, 11 December 2025**

Check Validity

For the issuing office: **Notified Body 0496, Italy DNV Business Assurance Italy S.r.l.**

Maurizio Bellina
Management Representative

Lack of fulfilment of conditions as set out in the Certification Agreement may render this Certificate invalid.
DNV Business Assurance Italy S.r.l. (Notified Body 0496) Via Energy Park, 14, 20871 Vimercate (MB), Italy. Tel: +39 039 68 99 905 - www.dnv.com
DMSP-5-PA-PED-05-A9 rev.3 Page 1 of 3

▲ **PED**

Certificazione del Sistema di Qualità applicato per la progettazione, fabbricazione, ispezione finale e la prova di valvole industriali in accordo con i requisiti della Direttiva PED.

OMAL operated Quality Management System Certificate for the design, manufacture, final inspection and tests of industrial valves in accordance with PED Directives

DNV

ACKNOWLEDGEMENT OF RECEIPT - EU

Acknowledgement Number: **C797427-PA-NA-ITA** **Issue 0**

This Acknowledgement consists of 2 pages

This is to confirm that the Technical File for the following product(s):

KRAVEN BUTTERFLY VALVE

With the type designation(s): **See page 2**

Manufactured by: **OMAL S.p.A. Via Ponte Nuovo, 11 – 25050 Rodengo Saiano (BS) - Italy**

has been received and stored according to the conformity assessment procedure described in Article 13, 1.(b).(ii), the Council Directive 2014/34/EU of 26 February 2014, category 2 non-electrical equipment.

Further details are given overleaf.

Jurisdiction:
DNV Product Assurance AS is appointed by the Norwegian Directorate for Civil Protection as Notified Body (No. 2460) under the terms of Article 21 of the Council Directive 2014/34/EU of 26 February 2014.

Date of issue: **2025-08-06**

Validity end date: **2035-08-06**

Ståle Sandstad
For DNV Product Assurance AS
The document has been digitally signed.

This document may only be reproduced in its entirety and without any change, schedule included.
DNV Product Assurance AS, Veritasveien 1, 1363 Høvik, Norway. Tel: +47 67 57 88 00. www.dnv.com DMSP-5-PA-ATEX-05-A1, rev 1
Page 1 of 2

▲ **ATEX**

Dichiarazione che il Sistema di Qualità applicato per la progettazione, fabbricazione, ispezione finale e la prova di valvole industriali è in accordo con i requisiti della Direttiva ATEX per apparecchiature destinate all'impiego in ambienti con atmosfera potenzialmente esplosiva.

Declaration that the Quality Management System operated by OMAL for the design, manufacture, final inspection and tests of industrial valves is in compliance with the Directive ATEX for equipment intended to be used in potentially explosive atmospheres.

WRAS
WATER REGULATIONS APPROVAL SCHEME

WRAS PRODUCT APPROVAL CERTIFICATE

Approval Number
260302019

Field of application	Products complying with the Water Supply (Water Fittings) Regulations 1999 (England & Wales), the Water Supply (Water Fittings) (Scotland) Byelaws 2014 and the Water Supply (Water Fittings) Regulations (Northern Ireland) 2009.
Approval holder	OMAL SPA 58
WRAS directory section	2020
Product type	Valves Butterfly
Model	VBXXXM068, VBXXXM069,VBXXXM070, VBXXXM071, VBXXXM072,VBXXXM073, VBXXXM074, VBXXXM075, VBXXXM076, VBXXXM077 BUTTERFLY VALVES
Basis of compliance	Tested to regulators Specification Test Code Sheets
Valid from	1st March 2026
Date of expiry	31st March 2031
Authorised by	Ian Hughes, WRAS Approvals Manager

The certificate by itself is not evidence of a valid WRAS Approval. The certificate must always be shared with the supporting letter. Confirmation of the current status of an approval must be obtained from the WRAS Approvals Directory (www.wrasapprovals.co.uk/directory/)

WRAS APPROVED PRODUCT

Certificate issued: 10th March 2026

The Water Regulations Approval Scheme Ltd. Registered in England No. 1303254 Registered office: 80 Lowick Close, Hazel Grove, Stockport, SK7 5ED

▲ **WRAS**

NOTES:

OMAL S.p.A. Società Benefit

Headquarter Via Ponte Nuovo, 11 - 25050 Rodengo Saiano (BS), Italy
Production Site Via Brognolo, 12 - 25050 Passirano (BS), Italy
Ph. +39 030 8900145 · Fax +39 030 8900423 · info@omal.it

OMAL USA Corp.

1835 Airport Exchange Blvd, Suite 100- 41018 Erlanger, (Kentucky), USA
Ph. +1 (859) 900-2108 · info@omal.com

OMAL Asia Pacific Ltd.

26/73, Moo 7, Racha Thewa Sub-district, Bang Phli District,
Samut Prakan Province, (Bangkok), Thailand
Ph. 02-117-1188 · info@omal.co.th

www.omal.com

UCAVFK01 - 10/26