DRG. NO. 3027	
REV.	CHANGES
1	REDRAWN. DELETE MODEL CODE & ND6 & ND16 FR DRILLING DETA F.B.F. 11-1-9

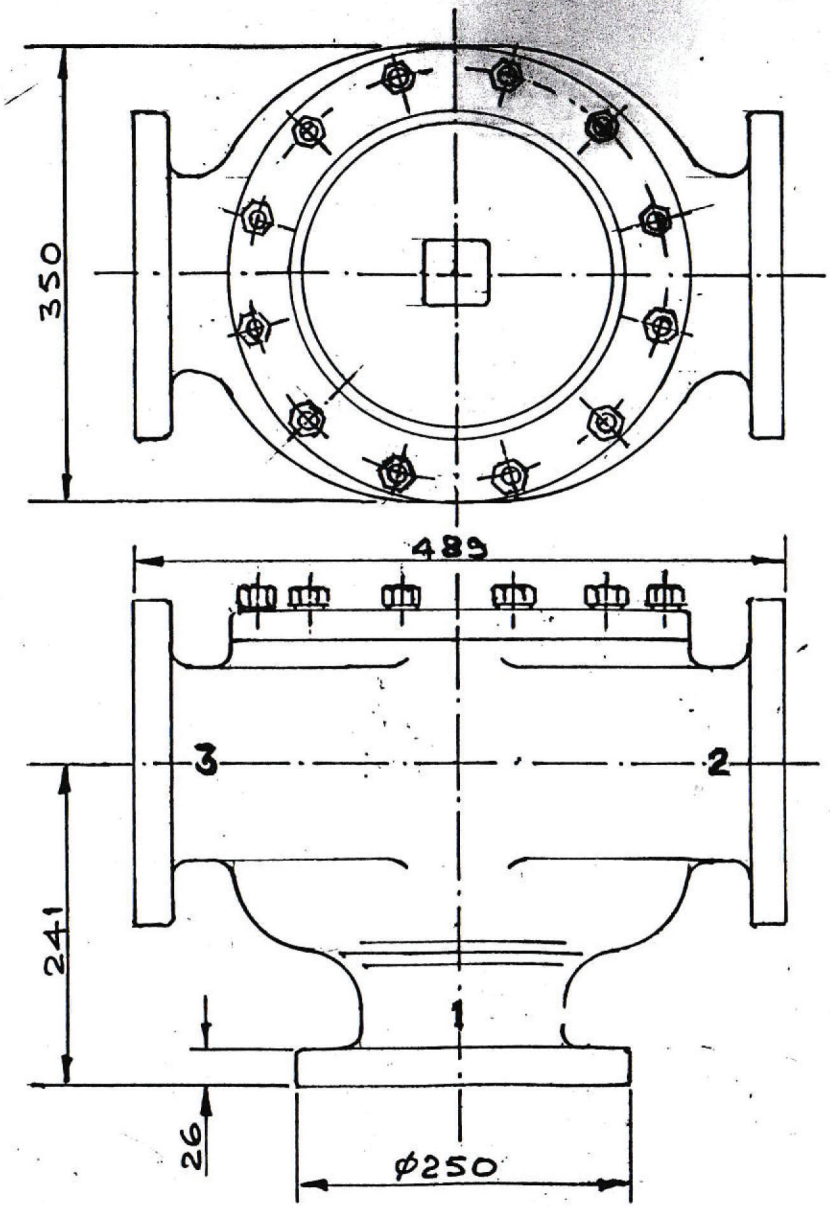

FLANGE DRILLING

STANDARD	N	ϕB	ϕC
DIN ND10/16	8	18	210

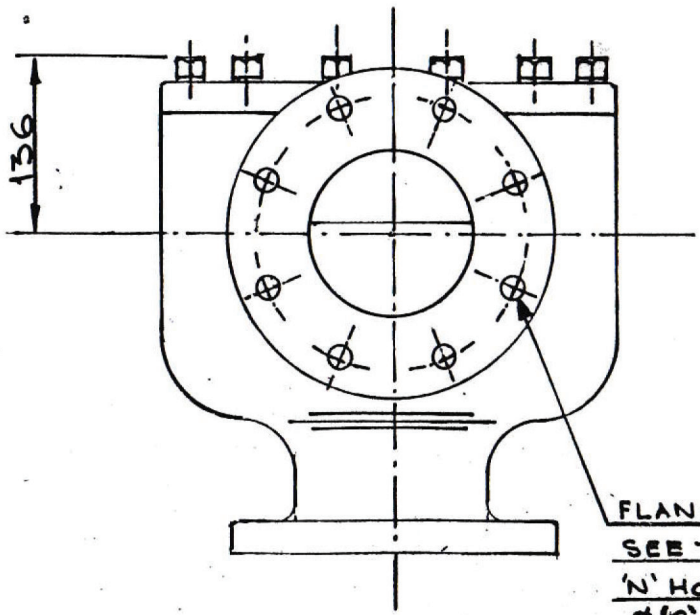

MVA Mess- und VerfahrensTechnik GmbH
Lochhamer Schlag 6
D-82166 Gräfelfing/München
Fon +49-89-85 83 69 - 0
Fax +49-89-85 83 69 -70

eMail info@mva-valves.com
interNet www.mva-valves.com

GENERAL TOLERANCES		DRAWN	F.B.F.	DIMENSIONS IN MILLIMETRES	TITLE
BASIC MM.	±	DATE	11-1-96	THIRD ANGLE PROJECTION	OUTLINE M125 THERMOSTATIC VALVE
ONE DEC. PLACE	±	SCALE	1:4		
TWO DEC. PLACES	±	MATL.			DRG. NO. 3027
ANGLES	±	FINISH			