DCP 70BH

Features
- Bolt terminal
- Toggle lever method

Use
- Telecommunication equipment, power supply devices
- Computer peripherals
- Office equipment, medical equipment, vending machines
- Machine tools, industrial machines
- Control panels



Circuit Protectors

Product Specification

Model	DCP 70BH
No. of poles	1Pole, 2Pole, 3Pole
Rated current (A)	60, 75, 100A
Rated breaking capacity	1.5kA(AC 220V) / 1.0kA(DC 65V) / 1.0kA(AC 380V)
Internal circuits & Accessories	Series, Series with Aux.S/W, Series with Alarm S/W, Switch only, Switch with Aux. S/W
Insulation resistance(Ω)	More than 100MΩ at DC 500V Megger
Insulation withstand voltage (V)	For 1 minute at AC 50/60Hz 1500V
Vibration resistance	Double amplitude 1mm 10~100 Hz (About 10G)
Life expectancy	More than 10,000 times (6,000 times of ON-OFF 6 times per minute at rated current / No current 4,000 times)
Overcurrent trip characteristics	Instantaneous (I), High speed (H), Middle speed (M), Low speed (L)
Ambient temperature	-40℃ ~ + 85℃ (with rated current ON)
Aux. contact capacity	AC 250V : 3A / DC 65V : 3A

Time delay data by characteristics

Unit : sec

Characteristics		100%	125%	200%	400%	600%	800%	1000%
AC	Low speed(L)	NO Trip	80-500	20-100	0.07-19	0.007-4	0.006-0.6	0.006-0.17
	Middle speed(M)	NO Trip	10-200	2.2-25	0.018-4.4	0.006-1.7	0.006-0.52	0.006-0.16
	High speed(H)	NO Trip	0.5-20	0.15-2.7	0.013-0.5	0.006-0.17	0.006-0.07	0.006-0.03
	Instantaneous(I)	NO Trip	0.02-0.4	0.007-0.12	0.006-0.037	0.006-0.026	0.006-0.022	0.006-0.02

Characteristics		100%	150%	200%	400%	600%	800%	1000%
DC	Low speed(L)	NO Trip	50-300	17-70	0.2-16	0.008-4.8	0.006-0.45	0.006-0.05
	Middle speed(M)	NO Trip	4-70	1.5-15	0.06-2.8	0.006-0.8	0.004-0.25	0.004-0.06
	High speed(H)	NO Trip	0.5-25	0.15-2.7	0.012-0.5	0.005-0.22	0.004-0.09	0.004-0.03
	Instantaneous(I)	NO Trip	0.009-0.3	0.007-0.15	0.005-0.035	0.005-0.02	0.004-0.018	0.004-0.015

Ordering Method

DCP | 73 | B | H | 750 | A | M | W

Symbol	No. of poles
71	1 Pole
72	2 Pole
73	3 Pole

Symbol	Terminal type
B	Bolt

Symbol	Rated current
600	60A
750	75A
1xx	100A

Symbol	Power used
D	DC
A	AC 50/60Hz

Symbol	Character-istic
I	Instantaneous
H	High speed
M	Middle speed
L	Low speed

Symbol	Circuit
S	Series
W	Series with Aux. S/W
E	Series with Alarm S/W
C	Switch only
F	Switch with Aux. S/W

Note 1. If an inrush current protection type is required, add a D on the order sheet (20 times protection of rated current at 8ms of sine wave).

D

Note 1



DCP 70BH

Unit : mm

Dimension by No. of poles

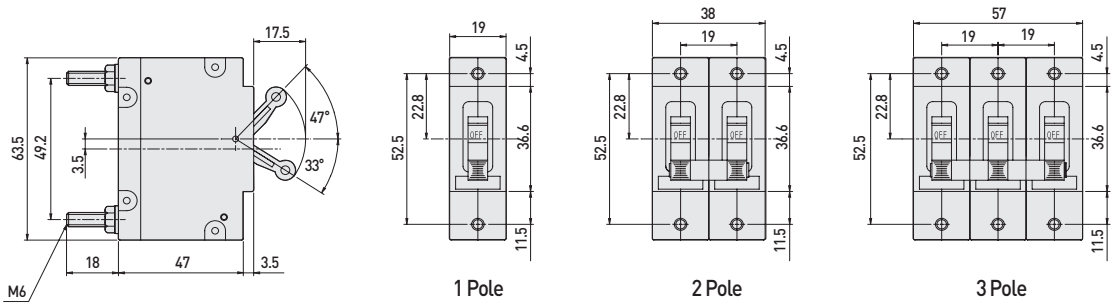

Dimension by internal circuits



Mounting hole dimension

