SBI High-load Linear Rail System

SBI High-load Linear Rail System

SBI-FL/FLL

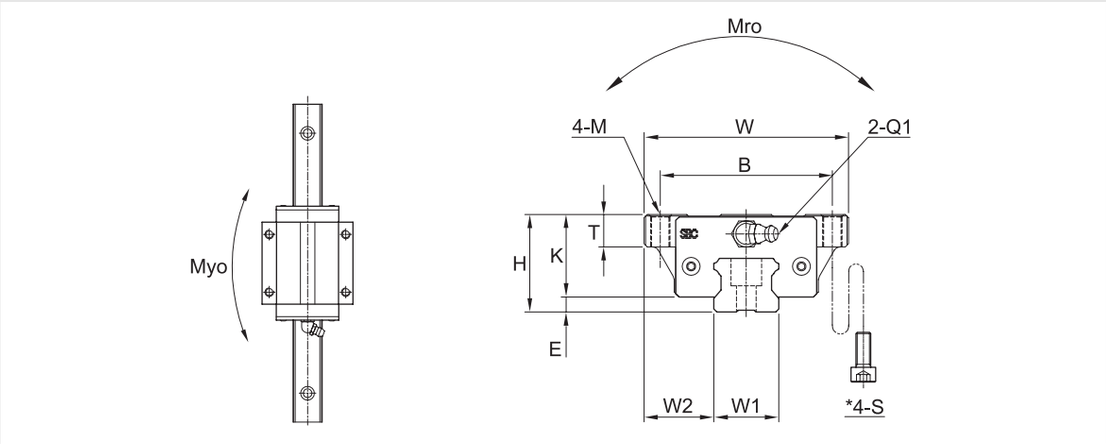

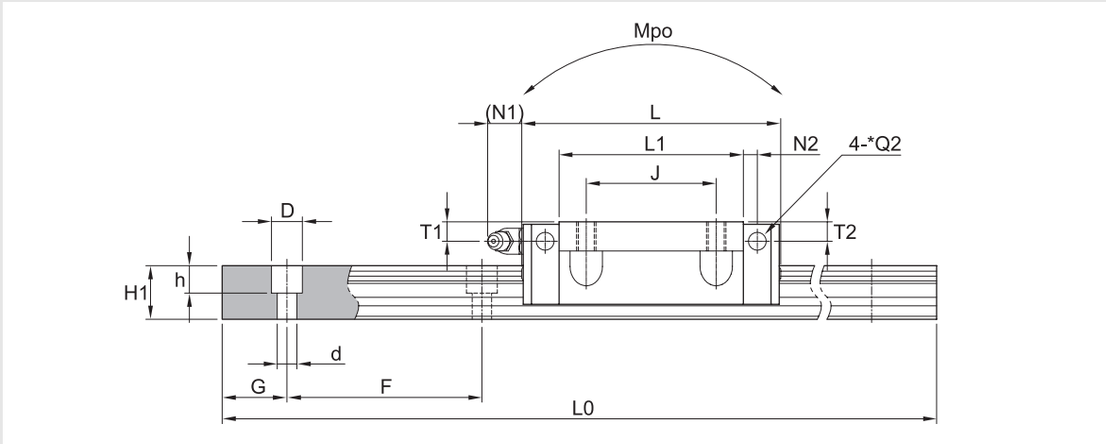

(Unit : mm)

Model	Mounting dimension				Block dimensions																									
	H	W	L	E	Mounting tap hole				L1	T±1	K	Grease fitting						Rail dimension									Basic load rating [kN]		Permissible static moment [kN • m]			Mass	
					B	J	M	*S				T1	N1	T2	N2	Q1	*Q2	W1	W2	H1	F	Bolt hole d	Bolt hole D	Bolt hole h	G	Max length of rail L0	C	Co	Mro	Mpo	Myo	Block [kg]	Rail [kg/m]
SBI15 FL	24	47	63.8	3	38	30	M5	M4	45.2	9	21	4.5	5.5	3.8	3.8	M4x0.7	Ø4	15	16	13	60	4.5	7.5	5.5	20	3000	14.1	24.1	0.16	0.17	0.17	0.19	1.3
SBI15 FLL	24	47	79.4	3	38	30	M5	M4	60.8	9	21	4.5	5.5	3.8	3.8	M4x0.7	Ø4	15	16	13	60	4.5	7.5	5.5	20	4000	17.1	31.7	0.21	0.29	0.29	0.26	1.3
SBI20 FL	30	63	78.8	4.6	53	40	M6	M5	56.8	12	25.4	6	11.7	5.8	5	M6x0.75	Ø4	20	21.5	16.5	60	6	9.5	8.5	20	4000	22.2	38.2	0.36	0.33	0.33	0.41	2.2
SBI20 FLL	30	63	96.4	4.6	53	40	M6	M5	74.4	12	25.4	6	11.7	5.8	5	M6x0.75	Ø4	20	21.5	16.5	60	6	9.5	8.5	20	4000	27.9	50	0.47	0.56	0.56	0.54	2.2
SBI25 FL	36	70	92	5.5	57	45	M8	M6	70	14	30.5	6	11.7	5	5	M6x0.75	Ø4	23	23.5	20	60	7	11	9	20	4000	31.5	52.1	0.56	0.56	0.56	0.69	3
SBI25 FLL	36	70	108	5.5	57	45	M8	M6	86	14	30.5	6	11.7	5	5	M6x0.75	Ø4	23	23.5	20	60	7	11	9	20	4000	36.7	64.4	0.69	0.84	0.84	0.85	3
SBI30 FL	42	90	107.6	7	72	52	M10	M8	79.6	15.5	35	8.5	11.7	7.8	5	M6x0.75	Ø6	28	31	23	80	9	14	12	20	4000	42.8	65.4	0.85	0.77	0.77	1.04	4.25
SBI30 FLL	42	90	131.6	7	72	52	M10	M8	103.6	15.5	35	8.5	11.7	7.8	5	M6x0.75	Ø6	28	31	23	80	9	14	12	20	4000	51.3	84.7	1.10	1.30	1.30	1.37	4.25
SBI35 FL	48	100	124.6	7.5	82	62	M10	M8	94.6	15	40.5	8	11.7	8	6	M6x0.75	Ø6	34	33	26	80	9	14	12	20	4000	59.5	89.1	1.42	1.28	1.28	1.56	6.02
SBI35 FLL	48	100	152.6	7.5	82	62	M10	M8	122.6	15	40.5	8	11.7	8	6	M6x0.75	Ø6	34	33	26	80	9	14	12	20	4000	71.3	115.3	1.83	2.12	2.12	2.04	6.02
SBI45 FL	60	120	142	9	100	80	M12	M10	108	18	51	10.5	13.5	9.3	6.5	PT1/8	Ø6	45	37.5	32	105	14	20	17	22.5	4000	79.2	116.3	2.48	1.90	1.90	2.80	9.77
SBI45 FLL	60	120	174	9	100	80	M12	M10	140	18	51	10.5	13.5	9.3	6.5	PT1/8	Ø6	45	37.5	32	105	14	20	17	22.5	4000	94.8	150.5	3.21	3.14	3.14	3.69	9.77
SBI55 FL	70	140	172.4	12	116	95	M14	M12	131	22	58	12	13	12	8	PT1/8	PT1/8	53	43.5	38	120	16	23	20	30	4000	127.3	181.8	4.81	2.97	2.97	4.42	13.72
SBI55 FLL	70	140	211.8	12	116	95	M14	M12	170.4	22	58	12	13	12	8	PT1/8	PT1/8	53	43.5	38	120	16	23	20	30	4000	147.9	224.5	5.95	4.78	4.78	5.82	13.72
SBI65 FL	90	170	219.8	19	142	110	M16	M14	170.4	26	71	14	13	14	10	PT1/8	PT1/8	63	53.5	53	150	18	26	22	35	4000	188.3	261.7	8.24	5.57	5.57	9.1	23.17
SBI65 FLL	90	170	272.2	19	142	110	M16	M14	222.8	26	71	14	13	14	10	PT1/8	PT1/8	63	53.5	53	150	18	26	22	35	4000	232.5	354.1	11.15	9.86	9.86	11.98	23.17

❶ C (Basic dynamic load rating), Co (Basic static load rating)

❷ *S: Bolt size for bottom mounting type of block.

❸ *Q2: The hole of side grease nipple is not made to prevent a foreign substance from going into inside. When you order the side grease nipple, we build it by ourselves.

SBI High-load Linear Rail System

SBI High-load Linear Rail System

SBI-SL/SLL

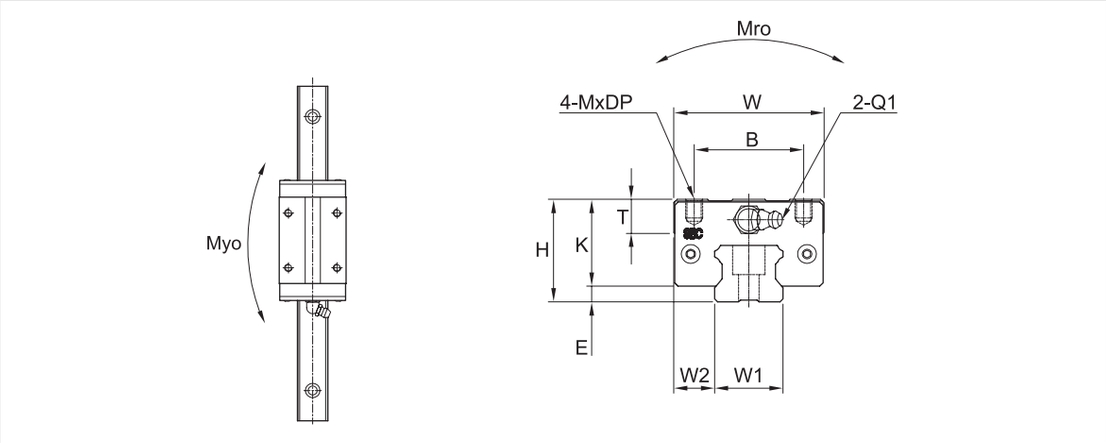

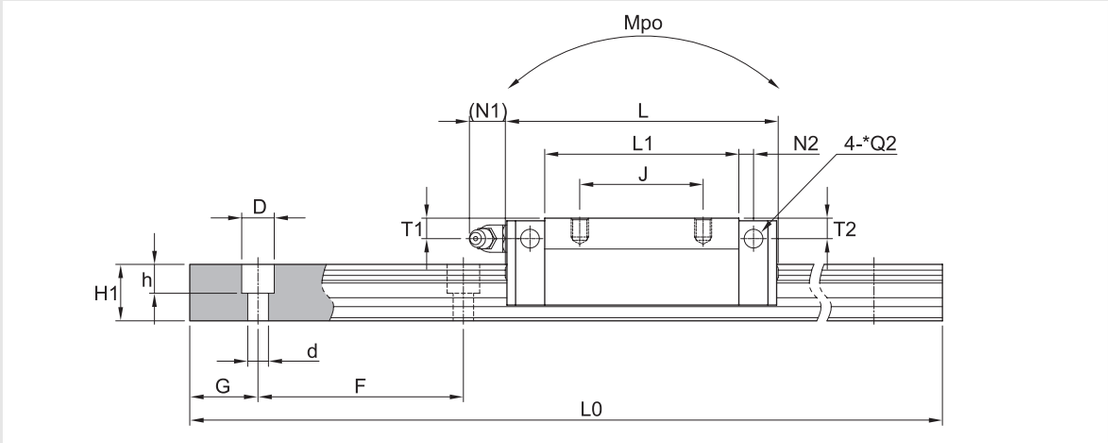

(Unit : mm)

Model	Mounting dimension				Block dimensions														Rail dimension									Basic load rating [kN]		Permissible static moment [kN • m]			Mass	
	H	W	L	E	Mounting tap hole				L1	T±1	K	Grease fitting							W1	W2	H1	F	Bolt hole			G	Max length of rail L0	C	Co	Mro	Mpo	Myo	Block [kg]	Rail [kg/m]
					B	J	M	DP				T1	N1	T2	N2	Q1	*Q2						d	D	h									
SBI15 SL	28	34	63.8	3	26	26	M4	5	45.2	10	25	8.5	5.5	7.8	3.8	M4x0.7	Ø4		15	9.5	13	60	4.5	7.5	5.5	20	3000	14.1	24.1	0.16	0.17	0.17	0.19	1.3
SBI15 SLL	28	34	79.4	3	26	34	M4	5	60.8	10	25	8.5	5.5	7.8	3.8	M4x0.7	Ø4		15	9.5	13	60	4.5	7.5	5.5	20	4000	17.1	31.7	0.21	0.29	0.29	0.26	1.3
SBI20 SL	30	44	78.8	4.6	32	36	M5	5	56.8	10	25.4	6	11.7	5.8	5	M6x0.75	Ø4		20	12	16.5	60	6	9.5	8.5	20	4000	22.2	38.2	0.36	0.33	0.33	0.41	2.2
SBI20 SLL	30	44	96.4	4.6	32	50	M5	5	74.4	10	25.4	6	11.7	5.8	5	M6x0.75	Ø4		20	12	16.5	60	6	9.5	8.5	20	4000	27.9	50	0.47	0.56	0.56	0.54	2.2
SBI25 SL	40	48	92	5.5	35	35	M6	8	70	16	34.5	10	11.7	9	5	M6x0.75	Ø4		23	12.5	20	60	7	11	9	20	4000	31.5	52.1	0.56	0.56	0.56	0.69	3
SBI25 SLL	40	48	108	5.5	35	50	M6	8	86	16	34.5	10	11.7	9	5	M6x0.75	Ø4		23	12.5	20	60	7	11	9	20	4000	36.7	64.4	0.69	0.84	0.84	0.85	3
SBI30 SL	45	60	107.6	7	40	40	M8	10	79.6	12	38	11.5	11.7	10.8	5	M6x0.75	Ø6		28	16	23	80	9	14	12	20	4000	42.8	65.4	0.85	0.77	0.77	1.04	4.25
SBI30 SLL	45	60	131.6	7	40	60	M8	10	103.6	12	38	11.5	11.7	10.8	5	M6x0.75	Ø6		28	16	23	80	9	14	12	20	4000	51.3	84.7	1.10	1.30	1.30	1.37	4.25
SBI35 SL	55	70	124.6	7.5	50	50	M8	10	94.6	15	47.5	15	11.7	15	6	M6x0.75	Ø6		34	18	26	80	9	14	12	20	4000	59.5	89.1	1.42	1.28	1.28	1.56	6.02
SBI35 SLL	55	70	152.6	7.5	50	72	M8	10	122.6	15	47.5	15	11.7	15	6	M6x0.75	Ø6		34	18	26	80	9	14	12	20	4000	71.3	115.3	1.83	2.12	2.12	2.04	6.02
SBI45 SL	70	86	142	9	60	60	M10	13	108	17	61	20.5	13.5	19.3	6.5	PT1/8	Ø6		45	20.5	32	105	14	20	17	22.5	4000	79.2	116.3	2.48	1.90	1.90	2.80	9.77
SBI45 SLL	70	86	174	9	60	80	M10	13	140	17	61	20.5	13.5	19.3	6.5	PT1/8	Ø6		45	20.5	32	105	14	20	17	22.5	4000	94.8	150.5	3.21	3.14	3.14	3.69	9.77
SBI55 SL	80	100	172.4	12	75	75	M12	18	131	21	68	22	13	22	8	PT1/8	PT1/8		53	22.5	38	120	16	23	20	30	4000	127.3	181.8	4.81	2.97	2.97	4.42	13.72
SBI55 SLL	80	100	211.8	12	75	95	M12	18	170.4	21	68	22	13	22	8	PT1/8	PT1/8		53	22.5	38	120	16	23	20	30	4000	147.9	224.5	5.95	4.78	4.78	5.82	13.72
SBI65 SL	90	126	219.8	19	76	70	M16	16	170.4	26	71	14	13	14	10	PT1/8	PT1/8		63	31.5	53	150	18	26	22	35	4000	188.3	261.7	8.24	5.57	5.57	9.1	23.17
SBI65 SLL	90	126	272.2	19	76	120	M16	16	222.8	26	71	14	13	14	10	PT1/8	PT1/8		63	31.5	53	150	18	26	22	35	4000	232.5	354.1	11.15	9.86	9.86	11.98	23.17

❶ C (Basic dynamic load rating), Co (Basic static load rating)

❷ *Q2: The hole of side grease nipple is not made to prevent a foreign substance from going into inside.
When you order the side grease nipple, we build it by ourselves.

SBI High-load Linear Rail System

SBI High-load Linear Rail System

SBI-HL/HLL

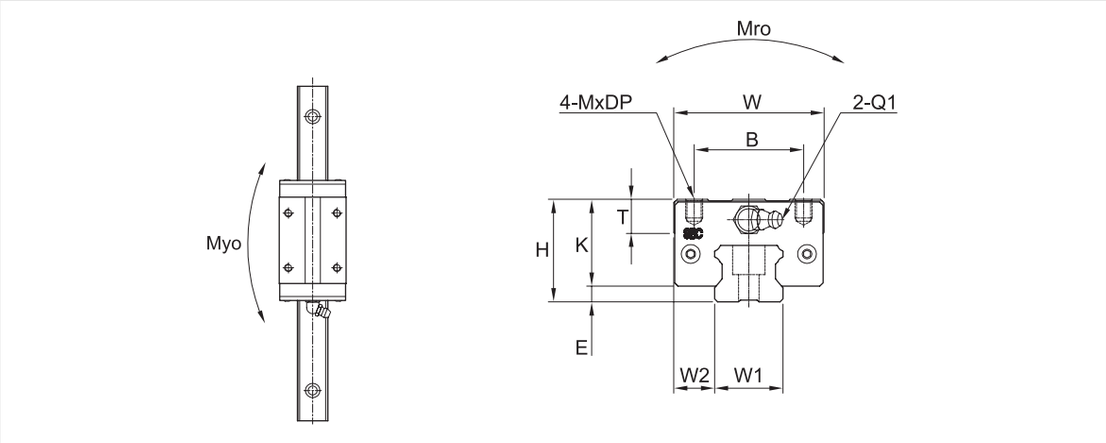

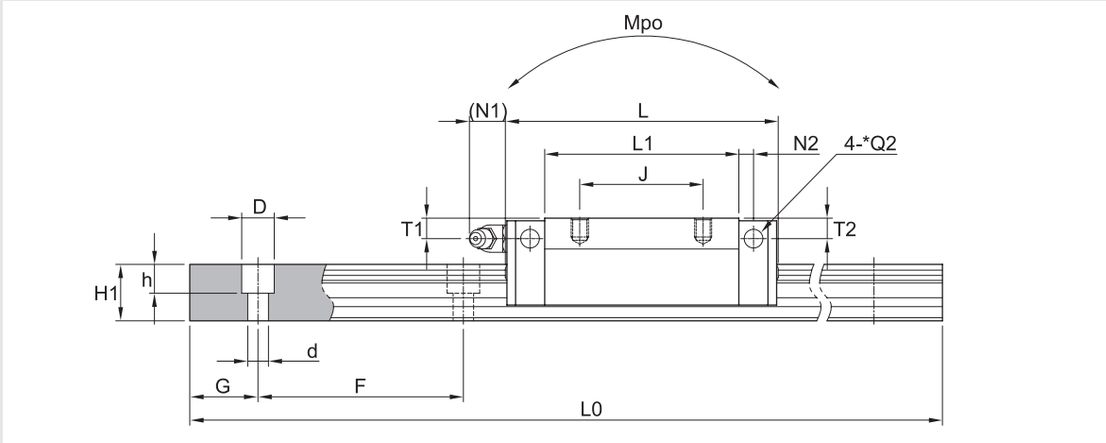

(Unit : mm)

Model	Mounting dimension				Block dimensions																											
	H	W	L	E	Mounting tap hole				L1	T±1	K	Grease fitting						Rail dimension									Basic load rating [kN]		Permissible static moment [kN • m]			Mass	
					B	J	M	DP				T1	N1	T2	N2	Q1	*Q2	W1	W2	H1	F	Bolt hole d	Bolt hole D	Bolt hole h	G	Max length of rail L0	C	Co	Mro	Mpo	Myo	Block [kg]	Rail [kg/m]
SBI15 HL	24	34	63.8	3	26	26	M4	4	45.2	6	21	4.5	5.5	3.8	3.8	M4x0.7	Ø4	15	9.5	13	60	4.5	7.5	5.5	20	3000	14.1	24.1	0.16	0.17	0.17	0.19	1.3
SBI15 HLL	24	34	79.4	3	26	34	M4	4	60.8	6	21	4.5	5.5	3.8	3.8	M4x0.7	Ø4	15	9.5	13	60	4.5	7.5	5.5	20	4000	17.1	31.7	0.21	0.29	0.29	0.26	1.3
SBI25 HL	36	48	92	5.5	35	35	M6	6	70	12	30.5	6	11.7	5	5.5	M6x0.75	Ø4	23	12.5	20	60	7	11	9	20	4000	31.5	52.1	0.56	0.56	0.56	0.69	3
SBI25 HLL	36	48	108	5.5	35	50	M6	6	86	12	30.5	6	11.7	5	5.5	M6x0.75	Ø4	23	12.5	20	60	7	11	9	20	4000	36.7	64.4	0.69	0.84	0.84	0.85	3
SBI30 HL	42	60	107.6	7	40	40	M8	8	79.6	12	35	8.5	11.7	7.8	5	M6x0.75	Ø6	28	16	23	80	9	14	12	20	4000	42.8	65.4	0.85	0.77	0.77	1.04	4.25
SBI30 HLL	42	60	131.6	7	40	60	M8	8	103.6	12	35	8.5	11.7	7.8	5	M6x0.75	Ø6	28	16	23	80	9	14	12	20	4000	51.3	84.7	1.10	1.30	1.30	1.37	4.25
SBI35 HL	48	70	124.6	7.5	50	50	M8	8	94.6	15	40.5	8	11.7	8	6	M6x0.75	Ø6	34	18	26	80	9	14	12	20	4000	59.5	89.1	1.42	1.28	1.28	1.56	6.02
SBI35 HLL	48	70	152.6	7.5	50	72	M8	8	122.6	15	40.5	8	11.7	8	6	M6x0.75	Ø6	34	18	26	80	9	14	12	20	4000	71.3	115.3	1.83	2.12	2.12	2.04	6.02
SBI45 HL	60	86	142	9	60	60	M10	10	108	17	51	10.5	13.5	9.3	6.5	PT1/8	Ø6	45	20.5	32	105	14	20	17	22.5	4000	79.2	116.3	2.48	1.90	1.90	2.80	9.77
SBI45 HLL	60	86	174	9	60	80	M10	10	140	17	51	10.5	13.5	9.3	6.5	PT1/8	Ø6	45	20.5	32	105	14	20	17	22.5	4000	94.8	150.5	3.21	3.14	3.14	3.69	9.77
SBI55 HL	70	100	172.4	12	75	75	M12	12	131	21	58	12	13	12	8	PT1/8	PT1/8	53	22.5	38	120	16	23	20	30	4000	127.3	181.8	4.81	2.97	2.97	4.42	13.72
SBI55 HLL	70	100	211.8	12	75	95	M12	12	170.4	21	58	12	13	12	8	PT1/8	PT1/8	53	22.5	38	120	16	23	20	30	4000	147.9	224.5	5.95	4.78	4.78	5.82	13.72

❶ C (Basic dynamic load rating), Co (Basic static load rating)

❷ *Q2: The hole of side grease nipple is not made to prevent a foreign substance from going into inside.
When you order the side grease nipple, we build it by ourselves.

SBI High-load Linear Rail System

SBI-FV

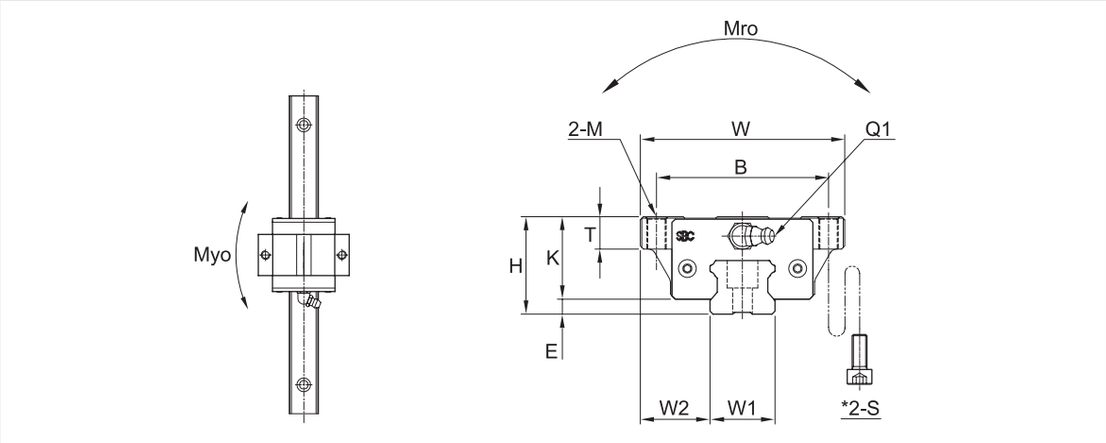

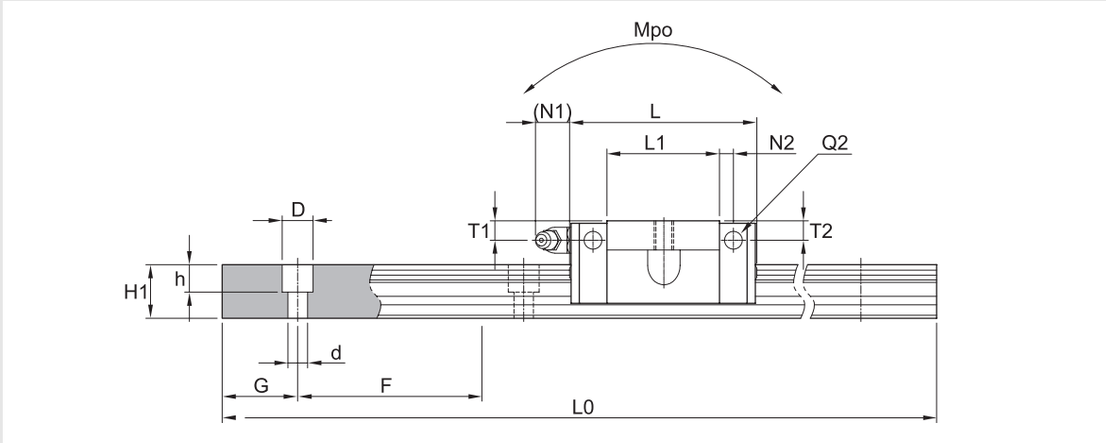

(Unit : mm)

Model	Mounting dimension				Block dimensions											
	H	W	L	E	Mounting tap hole			L1	T	K	Grease fitting					
					B	M	*S				T1	N1	T2	N2	Q1	*Q2
SBI15 FV	24	47	39.9	3	38	M5	M4	21.3	8.8	21	4.5	5.5	3.8	3.4	M4x0.7	Ø4
SBI20 FV	28	63	49.1	4.5	53	M6	M5	27.1	8	23.4	4.8	11.7	4	5	M6x0.75	Ø4
SBI25 FV	33	70	52.6	5.5	57	M8	M6	30.6	9	27.5	5.4	11.7	5.4	5	M6x0.75	Ø4

Rail dimension									Basic load rating [kN]		Permissible static moment [kN • m]			Mass	
W1	W2	H1	F	Bolt hole			G	Max length of rail L0	C	Co	Mro	Mpo	Myo	Block [kg]	Rail [kg/m]
				d	D	h									
15	16	13	60	4.5	7.5	5.5	20	3000	5.8	12.8	0.04	0.03	0.03	0.10	1.3
20	21.5	16.5	60	6	9.5	8.5	20	4000	9.4	20.2	0.12	0.10	0.10	0.24	2.2
23	23.5	20	60	7	11	9	20	4000	12.4	26.1	0.19	0.17	0.17	0.37	3

❶ C (Basic dynamic load rating), Co (Basic static load rating)

❷ *S: Bolt size for bottom mounting type of block.

❸ *Q2: The hole of side grease nipple is not made to prevent a foreign substance from going into inside.
When you order the side grease nipple, we build it by ourselves.

SBI High-load Linear Rail System

SBI High-load Linear Rail System

SBI-CL/CLL

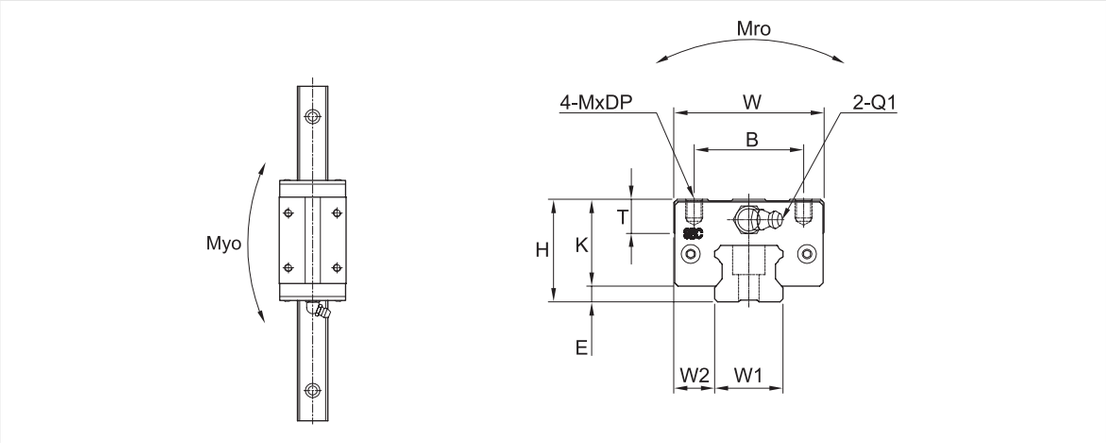

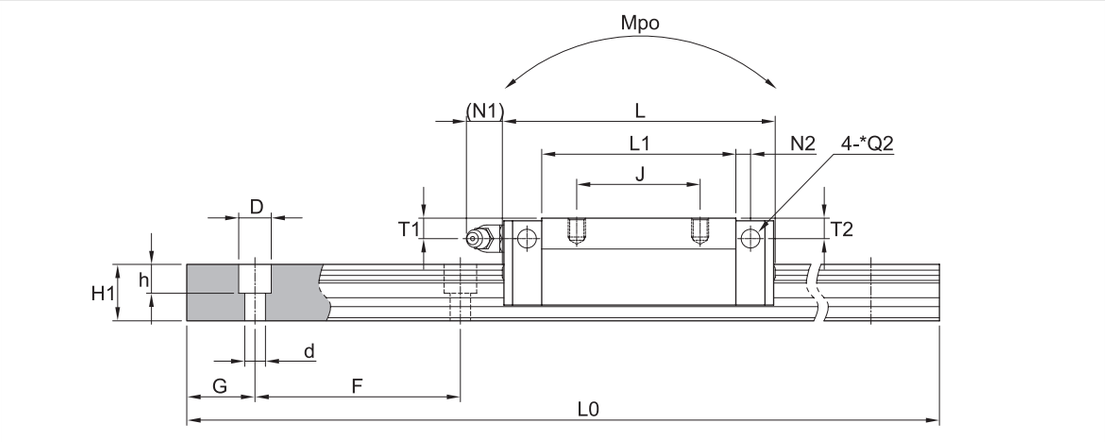

(Unit : mm)

Model	Mounting dimension				Block dimensions												
	H	W	L	E	Mounting tap hole				L1	T	K	Grease fitting					
					B	J	M	DP				T1	N1	T2	N2	Q1	*Q2
SBI20 CL	28	44	78.8	4.6	32	32	M5	5	56.8	7.8	23.4	4.8	11.7	4	5	M6x0.75	Ø4
SBI20 CLL	28	44	96.4	4.6	32	50	M5	5	74.4	7.8	23.4	4.8	11.7	4	5	M6x0.75	Ø4
SBI25 CL	33	48	92	5.5	35	35	M6	6	70	9	27.5	5.4	11.7	5.4	5	M6x0.75	Ø4
SBI25 CLL	33	48	108	5.5	35	50	M6	6	86	9	27.5	5.4	11.7	5.4	5	M6x0.75	Ø4

Rail dimension									Basic load rating [kN]		Permissible static moment [kN • m]			Mass	
W1	W2	H1	F	Bolt hole			G	Max length of rail L0						Block [kg]	Rail [kg/m]
				d	D	h			C	Co	Mro	Mpo	Myo		
20	12	16.5	60	6	9.5	8.5	20	4000	22.2	38.2	0.36	0.33	0.33	0.39	2.2
20	12	16.5	60	6	9.5	8.5	20	4000	27.9	50	0.47	0.56	0.56	0.52	2.2
23	12.5	20	60	7	11	9	20	4000	31.5	52.1	0.56	0.56	0.56	0.66	3
23	12.5	20	60	7	11	9	20	4000	36.7	64.4	0.69	0.84	0.84	0.82	3

❶ C (Basic dynamic load rating), Co (Basic static load rating)

❷ *Q2: The hole of side grease nipple is not made to prevent a foreign substance from going into inside.
When you order the side grease nipple, we build it by ourselves.

SBI High-load Linear Rail System

SBI High-load Linear Rail System

SBI-SV

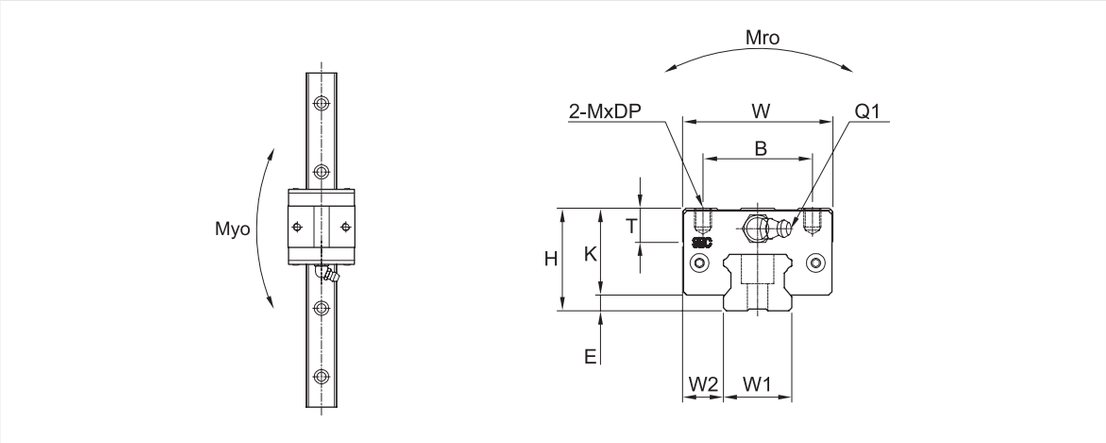

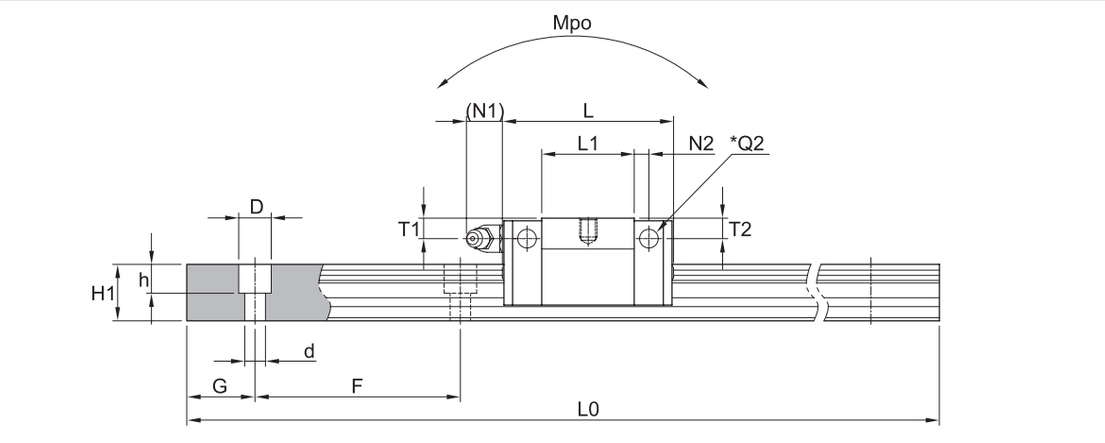

(Unit : mm)

Model	Mounting dimension				Block dimensions											
	H	W	L	E	Mounting tap hole			L1	T	K	Grease fitting					
					B	M	DP				T1	N1	T2	N2	Q1	*Q2
SBI15 SV	24	34	39.9	3	26	M4	5	21.3	6	21	4.5	5.5	3.8	3.4	M4x0.7	Ø4
SBI20 SV	28	44	49.1	4.6	32	M5	5	27.1	7.8	23.4	4.8	11.7	4	5	M6x0.75	Ø4
SBI25 SV	33	48	52.6	5.5	35	M6	6	30.6	9	27.5	5.4	11.7	5.4	5	M6x0.75	Ø4

Rail dimension									Basic load rating [kN]		Permissible static moment [kN • m]			Mass	
W1	W2	H1	F	Bolt hole			G	Max langth of rail L0	C	Co	Mro	Mpo	Myo	Block [kg]	Rail [kg/m]
				d	D	h									
15	9.5	13	60	4.5	7.5	5.5	20	3000	5.8	12.8	0.04	0.03	0.03	0.10	1.3
20	12	16.5	60	6	9.5	8.5	20	4000	9.4	20.2	0.12	0.10	0.10	0.24	2.2
23	12.5	20	60	7	11	9	20	4000	12.4	26.1	0.19	0.17	0.17	0.37	3

❶ C (Basic dynamic load rating), Co (Basic static load rating)

❷ *Q2: The hole of side grease nipple is not made to prevent a foreign substance from going into inside.
When you order the side grease nipple, we build it by ourselves.

SBI High-load Linear Rail System

SBI High-load Linear Rail System

Standard and Max. Length of SBI rail

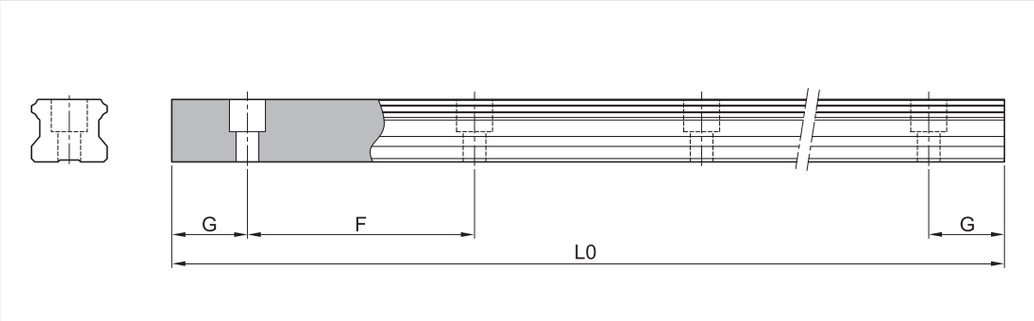

(Unit : mm)

Model number	SBI15	SBI20	SBI25	SBI30	SBI35	SBI45	SBI55	SBI65
Standard length	160	220	220	280	280	570	780	1270
	220	280	280	440	440	885	900	1570
	280	240	340	600	600	1095	1020	2020
	340	460	460	760	760	1200	1140	2470
	460	640	640	1000	1000	1410	1260	2620
	640	820	820	1240	1240	1620	1380	2920
	820	1000	1000	1480	1480	1830	1500	3070
	1000	1240	1240	1640	1640	2040	1620	4000
	1240	1480	1480	1800	1800	2250	1740	-
	1480	1600	1600	2040	2040	2460	1860	-
	1600	1840	1840	2200	2200	2985	1980	-
	1960	2080	2080	2520	2520	3510	2220	-
	2200	2200	2200	2840	2840	4000	2580	-
	2500	2500	2500	3000	3000	-	2940	-
	2860	2960	2980	3480	3480	-	3540	-
	3000	3520	3520	4000	4000	-	4000	-
	-	4000	4000	-	-	-	-	-
F	60	60	60	80	80	105	120	150
G	20	20	20	20	20	22.5	30	35
L0(Max length)	3,000	4,000	4,000	4,000	4,000	4,000	4,000	4,000

* If the maximum length exceeds this size, butt joints can be supplied.
* For more information about butt jointing, please refer to the page of safety design.
* If the G is not standard, please indicate it in the order sheet.

Bottom mounting rail (SBI-B type)

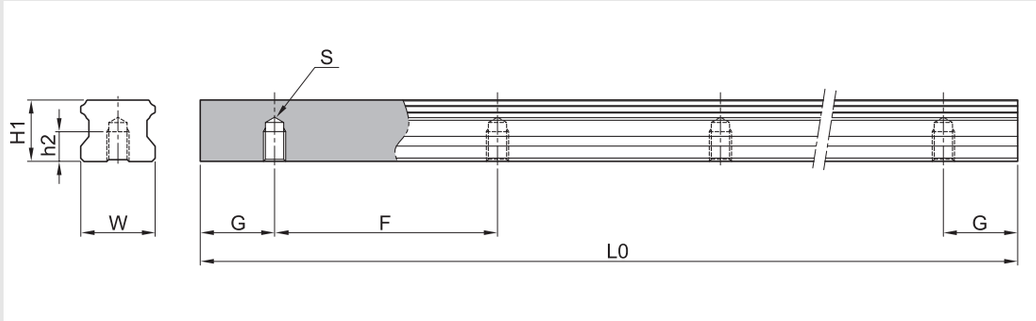

(Unit : mm)

Model number	W1	H1	S	h2	G	F	L0 (Max length)	Weight (kg/m)
SBI 15-B	15	13	M5X0.8	8	20	60	3,000	1.39
SBI 20-B	20	16.5	M6	9	20	60	4,000	2.37
SBI 25-B	23	20	M6	9	20	60	4,000	3.26
SBI 30-B	28	23	M8	12	20	80	4,000	4.63
SBI 35-B	34	26	M8	12	20	80	4,000	6.45
SBI 45-B	45	32	M12	18	22.5	105	4,000	10.49

* If the maximum length exceeds this size, please contact SBC.

SBI High-load Linear Rail System

(1) Standard grease fitting (Front grease fitting)

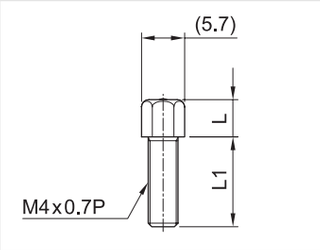

(Unit : mm)

Specification		M4x0.7P		
Applied model	Grease fitting model	Symbol	L	L1
SBI 15	1N	None	7	6
	1D	DD, ZZ	5	9
	1Z	KK	5	11
	1F	D(M)F	5	13

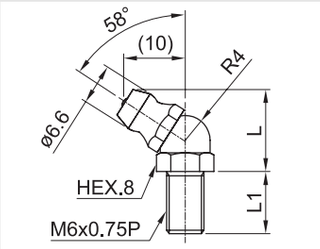

(Unit : mm)

Specification		M6x0.75P, Asia type		
Applied model	Grease fitting model	Symbol	L	L1
SBI 20~35	IA2N	None	14	8
	IA2D	DD, ZZ	14	10
	IA2Z	KK, D(M)F	14	13
	IA2F	D(M)FDD,D(M)FZZ,D(M)FKK	14	18

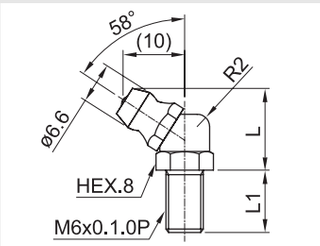

(Unit : mm)

Specification		M6x1.0P, Europe type		
Applied model	Grease fitting model	Symbol	L	L1
SBI 20~35	IE2N	None	14	8
	IE2D	DD, ZZ	14	10
	IE2Z	KK, D(M)F	14	13
	IE2F	D(M)FDD,D(M)FZZ,D(M)FKK	14	18

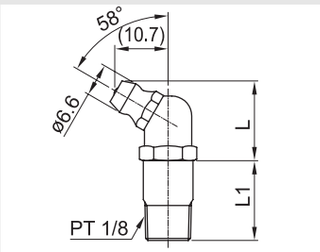

(Unit : mm)

Specification		PT 1/8		
Applied model	Grease fitting model	Symbol	L	L1
SBI 45~65	4N	None	17	13
	4D	DD, KK, ZZ	17	16
	4Z	D(M)F	17	21
	4F	D(M)FDD, D(M)FKK, D(M)FZZ	17	24

(2) Side grease fitting

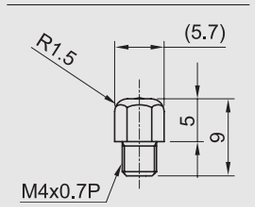

Specification	M4x0.7P
Applied model	SBI 15
Grease fitting model	S1N

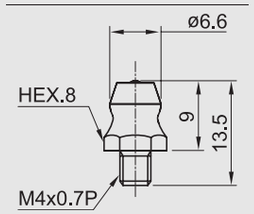

Specification	M4x0.7P
Applied model	SBI 20, 25
Grease fitting model	S2N

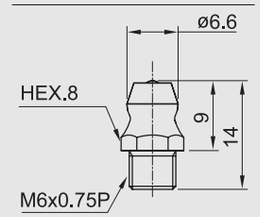

Specification	M6x0.75P
Applied model	SBI 30, 35, 45
Grease fitting model	S3N

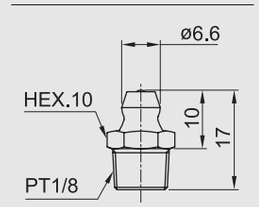

Specification	PT1/8
Applied model	SBI 55, 65
Grease fitting model	S4N

(3) FS nipple connector for side grease fitting (FL. FLL flange type only)

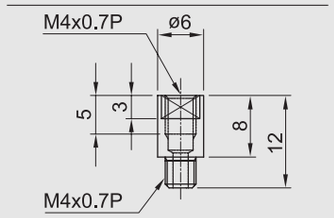

Specification	M4x0.7P
Applied model	SBI 15
Grease fitting model	S1C

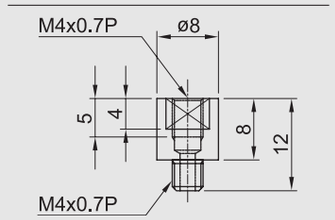

Specification	M4x0.7P
Applied model	SBI 20, 25
Grease fitting model	S2C

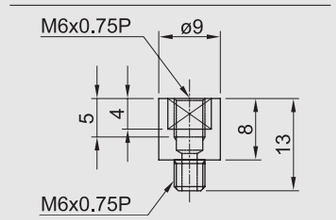

Specification	M6x0.75P
Applied model	SBI 30, 35, 45
Grease fitting model	S4C

* For size 30~45, two pieces of FS nipple connector are applied.

(4) Copper pipe

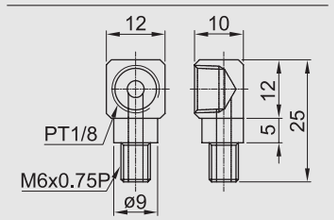

Input size	PT1/8
Output size	M6x0.75P
Applied model	SBI 20
Grease fitting model	S2P

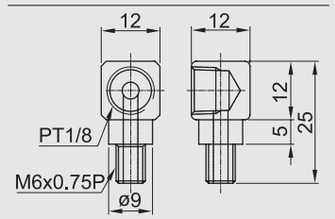

Input size	PT1/8
Output size	M6x0.75P
Applied model	SBI 25, 30, 35
Grease fitting model	S3P

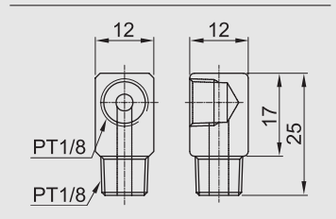

Input size	PT1/8
Output size	PT1/8
Applied model	SBI 45
Grease fitting model	S4P

SBI High-load Linear Rail System

SBI High-load Linear Rail System

Accuracy

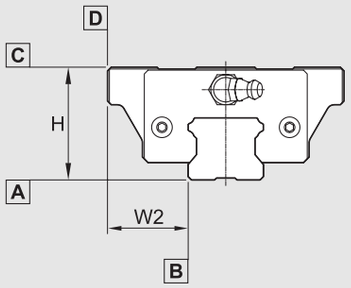

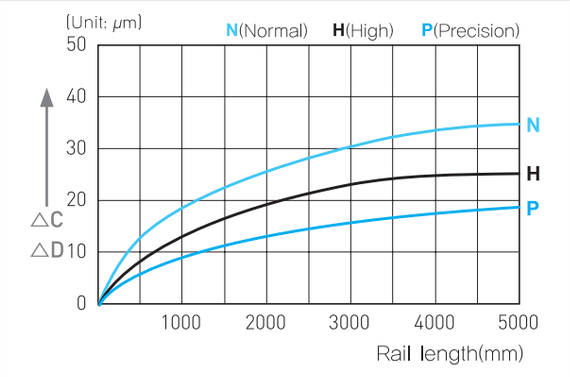

(Unit : mm)

Item	N	H	P
Tolerance for the height **H**	±0.1	±0.04	±0.02
Tolerance for the rail-to-block lateral distance **W2**	±0.1	±0.04	±0.02
Tolerance for the height **H** difference among blocks	0.03	0.015	0.007
Tolerance for rail-to-block lateral distance **W2** distance among blocks	0.03	0.015	0.007
Running parallelism of surface C with surface A	△C		
Running parallelism of surface D with surface B	△D		

- **N** : Normal
- **H** : High
- **P** : Precision

Preload

Reference	Volume of preload
K0 (None)	Clearance within 0.01mm
K1 (Normal)	0.00 ~ 0.02C
K2 (Light)	0.04 ~ 0.06C
K3 (Heavy)	0.08 ~ 0.10C

- C(kN) : Basic dynamic load rating

※ "K3" Preload is not available for SBI15 type

Shoulder height and fillet radius R

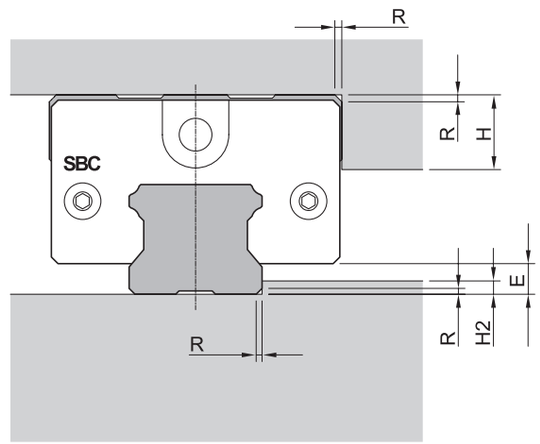

(Unit : mm)

Model number	Fillet radius R	Shoulders height H1	Shoulders height H2	E
15	0.6	7	2.5	3
20	1	8	3.5	4.6
25	1	10	4.5	5.5
30	1	11	5	7
35	1	13	6	7.5
45	1.6	16	8	9
55	1.6	20	10	12
65	1.6	25	15	19

SBI High-load Linear Rail System

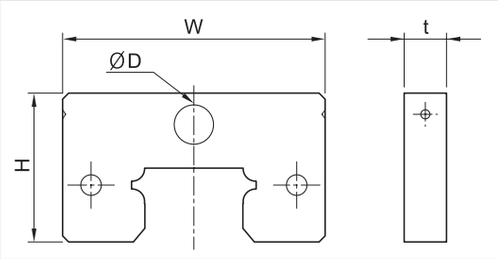

[Dimension of MF container]

(Unit : mm)

Reference	Model	Applied model	Block type	W	t	H	D
DF / MF	15A	SBI15	FL/FLL/HL/HLL SL/SLL/FV/SV	33.4	7	20.2	4
	20A	SBI20	FL/FLL SL/SLL	43.4	7	24.6	6.5
	20B		CL/CLL/FV/SV			22.6	
	25A	SBI25	FL/FLL/HL/HLL SL/SLL	47	7	29.7	6.5
	25B		CL/CLL/FV/SV			26.7	
	30A	SBI30	FL/FLL/HL/HLL SL/SLL	59	8	34.2	6.5
	35A	SBI35	FL/FLL/HL/HLL SL/SLL	69	8	39.7	6.5
	45A	SBI45	FL/FLL/HL/HLL SL/SLL	85	8	49.7	10.5
	55A	SBI55	FL/FLL/HL/HLL SL/SLL	98	9	56	10.5
	65A	SBI65	FL/FLL SL/SLL	123	9	69	10.5

[Seal resistance]

For the maximum value of seal resistance of SBI standard type per block, in which grease is not applied.

※ Scraper has no resistance because it is not contacting rail.

(Unit : N)

Model	End seal	DF	MF
SBI 15	2.0	4.7	3.5
SBI 20	2.5	4.9	3.0
SBI 25	3.0	5.5	3.5
SBI 30	3.9	5.6	3.5
SBI 35	2.5	5.7	3.7
SBI 45	3.4	5.9	4.1
SBI 55	3.5	6.2	4.2
SBI 65	3.6	6.4	4.4

HT high temperature end plate

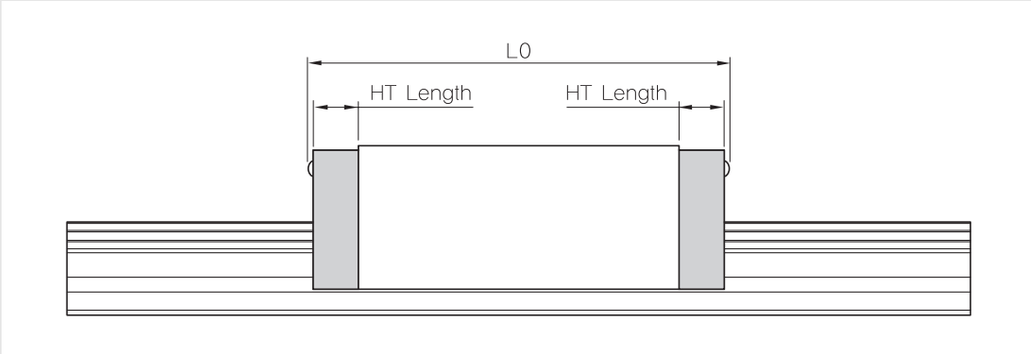

(Unit : mm)

Reference	HT Length	Overall length					
		Applied model	L0	Applied model	L0	Applied model	L0
HT 15A	6.5	SBI 15V	38.3	SBI 15	62.2	SBI 15L	77.8
HT 20A	8	SBI 20V	47.1	SBI 20	76.8	SBI 20L	94.4
HT 25A	8	SBI 25V	50.6	SBI 25	90	SBI 25L	106
HT 30A	10	-	-	SBI 30	105.6	SBI 30L	129.6
HT 35A	11	-	-	SBI 35	122.6	SBI 35L	150.6
HT 45A	13	-	-	SBI 45	140	SBI 45L	172
HT 55A	16	-	-	SBI 55	168.5	SBI 55L	207.9
HT 65A	20	-	-	SBI 65	215.9	SBI 65L	268.3

Ordering example : **SBI25FL - HT - 2 - K1 - 800 - N**
❶ ❷ ❸ ❹ ❺ ❻

❶ Model
❷ High temperature end plate
❸ Block quantity
❹ Preload
❺ Rail length
❻ Accuracy

※ All plastic components are replace with steel or aluminum in the High Temperature Blocks.

※ Side grease fitting is not available for high temperature end plates

Grease and nipple specification

[Grease]

SBI uses two types of grease according to working conditions.
For details, please see the technical data for grease.

SBI High-load Linear Rail System

SBI High-load Linear Rail System

RC Cap

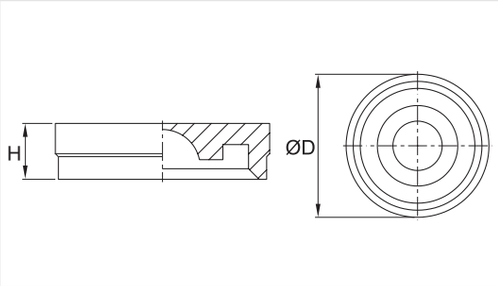

(Unit : mm)

Model	D±0.1	H±0.1
RC 15	7.6	1.3
RC 20	9.6	3.5
RC 25	11.1	2.8
*RC 30	14.2	3.7
RC 45	20.2	4.7
RC 55	23.2	6
RC 65	26.2	6

- RC 30 is used for SBI 30, 35 rail.
- SBI, SBG type use same RC cap.

ST Tape

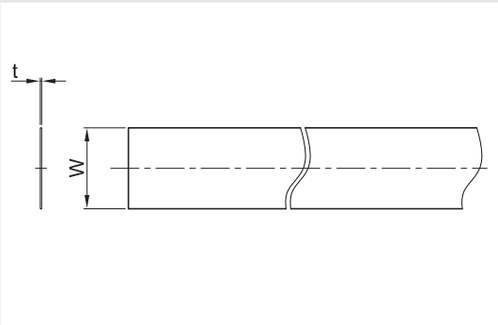

(Unit : mm)

Model	W	t
ST 15A	11	0.1
ST 20A	15	0.1
ST 25A	17	0.1
ST 30A	21	0.1
ST 35A	27	0.1
ST 45A	37	0.1
ST 55A	43	0.1
ST 65A	51	0.1

Ordering example : **ST15A - 1000L**
❶ ❷

❶ Model number
❷ Length

Seal and MF container

[Method and overall length with each seal]

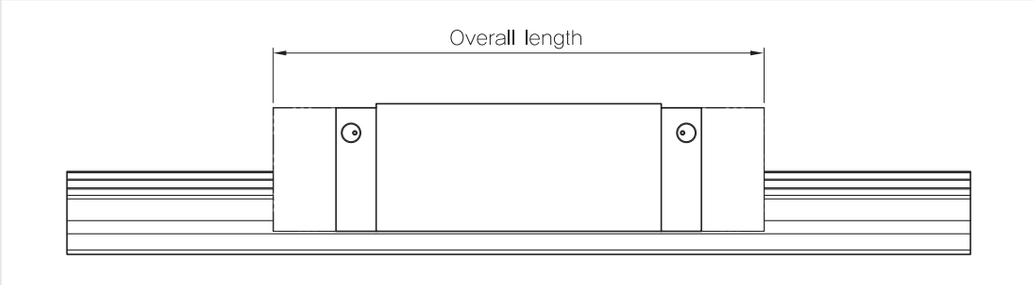

- E : End seal S : Scraper F : DF (High dust protection seal). MF (Self lubricant)

(Unit : mm)

Additional seal		Standard	DD	ZZ	KK	D(M)F	D(M)FDD	D(M)FZZ	D(M)FKK
Indication of seal		E	E+E	E+S	E+E+S	F+E	F+E+E	F+E+S	F+E+E+S
Overall length with seal	15V	39.9	44.5	45.3	49.9	53.9	58.5	59.3	63.9
	15	63.8	68.4	69.2	73.8	77.8	82.4	83.2	87.8
	15L	79.4	84	84.8	89.4	93.4	98	98.8	103.4
	20V	49.1	54.1	54.5	59.5	63.1	68.1	68.5	73.5
	20	78.8	83.8	84.2	89.2	92.8	97.8	98.2	103.2
	20L	96.4	101.4	101.8	106.8	110.4	115.4	115.8	120.8
	25V	52.6	57.6	58	63	66.6	71.6	72	77
	25	92	97	97.4	102.4	106	111	111.4	116.4
	25L	108	113	113.4	118.4	122	127	127.4	132.4
	30	107.6	113.6	114	120	123.6	129.6	130	136
	30L	131.6	137.6	138	144	147.6	153.6	154	160
	35	124.6	130.6	131	137	140.6	146.6	147	153
	35L	152.6	158.6	159	165	168.6	174.6	175	181
	45	142	148	148.4	154.4	158	164	164.4	170.4
	45L	174	180	180.4	186.4	190	196	196.4	202.4
	55	172.4	179.4	179.2	186.2	190.4	197.4	197.2	204.2
	55L	211.8	218.8	218.6	225.6	229.8	236.8	236.6	243.6
	65	219.8	226.8	226.6	233.6	237.8	244.8	244.6	251.6
	65L	272.2	279.2	279	286	290.2	297.2	297	304

- Bottom seal of SBI type is integrated with bottom retainer. (Except SBI15)
- If block is assembled with MF container, the grease fitting is not supplied. If you would like to feed the grease to the block, please order side grease fitting type.