50096 / 1.11 / 2024-04-30 / CD / EU-NA

Product Information ITM-51 | ITM-51R **FOOD**

Relative Turbidity Meter ITM-51

CLEANadapt

Application / Specified Usage

- Relative turbidity measurement of liquid media for mid to high turbidity range (200...300 000 NTU equivalent)

Communication

IO-Link 4...20 mA

Application Examples

- Phase separation of products (for example whey – cream – milk)
- CIP-return line (monitoring of pre-rinse water to product leftovers)
- Yeast harvest in breweries
- Quality control
- Leackage control of filter and gaskets

ITM-51

Hygienic Design / Process Connection

- Hygienic process connection with CLEANadapt
- Versions available with EHEDG approval
- Versions available to conform to 3-A Standard 46-
- All wetted materials are FDA-conform
- Sensor completely made of stainless steel
- Complete overview of process connections: see order code
- The Anderson-Negele CLEANadapt system offers a flow-optimized, hygienic and easily sterilizable installation solution for sensors.

ITM-51R

Features / Advantages

- CIP-/SIP-cleaning up to 140 °C (284 °F) / maximum 120 minutes
- Front flush or extended sensor stem
- Optics made of high resistant sapphire
- Intergrated leackage detection in the sensor
- Independent to reflexions at small diameters or electro-polished surfaces
- No color dependency (wave length 860 nm)
- Smallest pipe diameter: DN 25
- High reproducibility: ≤ 1 % of full scale
- Switching output (switchpoint and hysteresis freely adjustable)
- Analog output 4...20 mA freely adjustable
- External range switching between two measurement ranges

Options / Accessories

- Electrical connection with M12 plug-in connector
- Preassembled cable for M12 plug-in connector
- Display module Simple User Interface (SUI) and Large User Interface (LUI)
- Remote version with cable length up to 30 m
- Add-On Instructions are available at www.anderson-negele.com/aoi

Measurement Principle

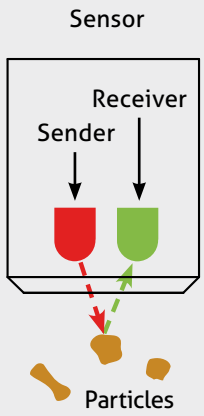

Measuring Principle of the Relative Turbidity Meter

An infrared diode irradiates infrared light into the media. Particles in the media reflecting the irradiated light which is detected by the receiver diode (backscatter principle). The electronics calculates the relative turbidity of the media according to the received signal.
The relative turbidity is based on the Negele calibration standard and is displayed in "%TU".

Specification			
Measurement category	can be selected	%TU, NTU, EBC, %solids (customized)	
Measurement range	freely adjustable	0...300 000 NTU equivalent 0...200 %TU 0...75 000 EBC	
Process connection		CLEANadapt G1/2" hygienic TriClamp 1½", 2", 2½", 3" Varivent DN 25 (type F) DN 40/50 (type N)	
Process pressure		-1...20 bar / -14...290 psi	
Tightening torque		20 Nm (CLEANadapt system)	
Materials	Connecting head Sensor Lens Plastic cover/sight glass	Stainless steel 1.4308 / AISI CF-8 Stainless steel 1.4404 / AISI 316L Sapphire Polycarbonate	
Temperature ranges	Ambient Process CIP/SIP	-10...60 °C / 14...140 °F -10...130 °C / 14...266 °F Up to 140 °C / 284 °F max. 120 min	
Reproducibility	of turbidity	< 1 % of upper range limit	
Resolution/measurement range	the resolution is dependent on the selected measure-ment range	range/NTU	resolution/NTU
		< 1 000	15
		1 000...10 000	30
		10 000...100 000	100
Accuracy	0...9 999 NTU 10 000...300 000 NTU	±3 % from measurement value; ±50 NTU offset ±5 % from measurement value	
Long-term stability	±0.2 %	from measurement value	
Response time	for turbidity measurement	0.75 s	
Damping	1.5 s, 3 s, 5 s, 10 s, 20 s	adjustable damping	
Measurement principle	Infrared backscatter	wave length 860 nm	
Electrical connection	Cable gland Cable connection Supply voltage Protection class	2x M16x1.5 2x M12 connector 1.4301 / AISI 304 18...36 V DC max. 190 mA IP69K	
Communication	Analog Digital	1x Analog output 4...20 mA, potential-free 1x Digital Input (24 V DC), short circuit proof IO-Link	
Weight		750 g	

Showcase Diagram of different Media

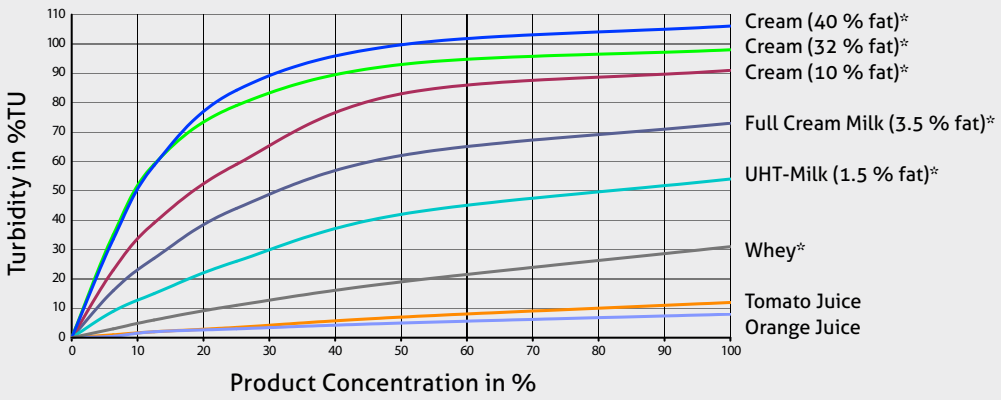

* Average turbidity of customary milk products at different dilutions.

Calibration

The device is calibrated at the factory. A regular calibration is not necessary. The calibration can be checked by the customer using a calibration tool. A detailed description can be found in the manual.

ITM-51 with vertical head orientation

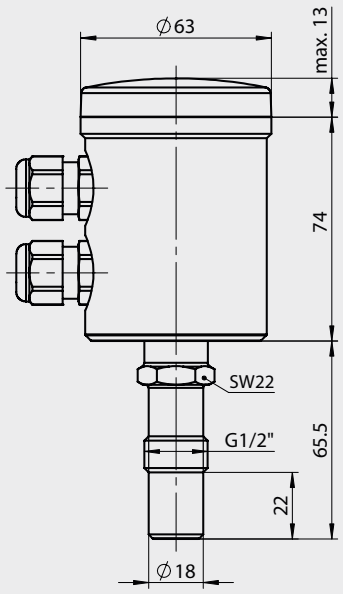

ITM-51-S0L-V

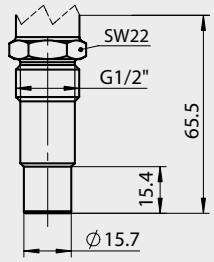

ITM-51-TCx-V

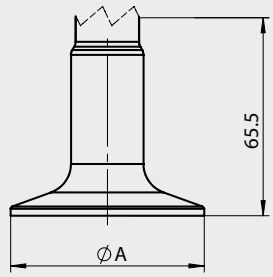

ITM-51-TLx-V

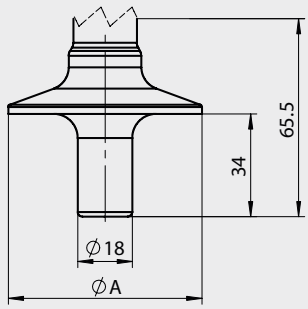

ITM-51-Vxx-V

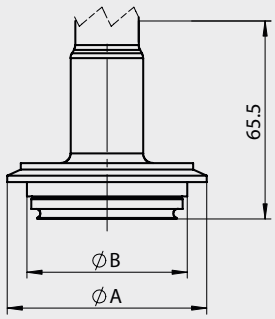

ITM-51 with horizontal head orientation

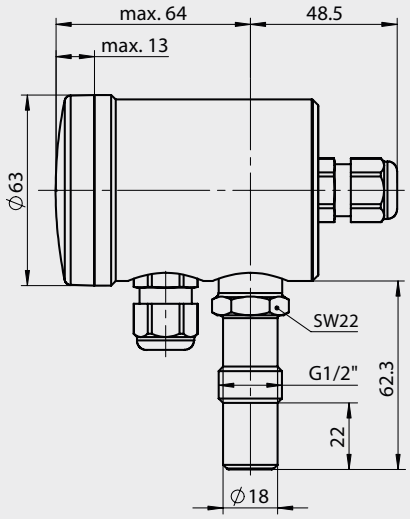

ITM-51-S0L-H

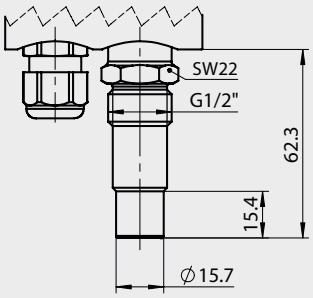

ITM-51-TCx-H

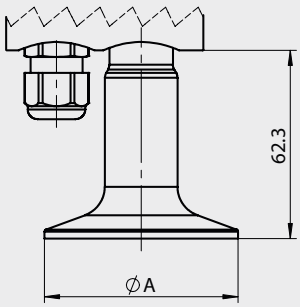

ITM-51-Vxx-H

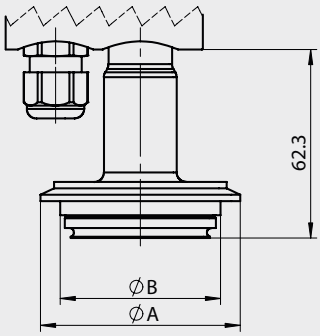

ITM-51-TLx-H

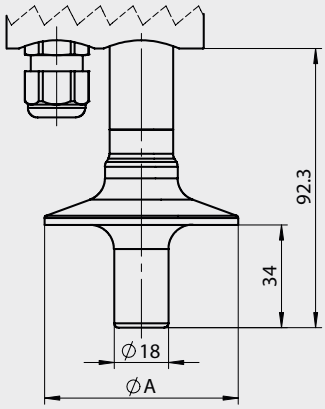

In- and Output Length

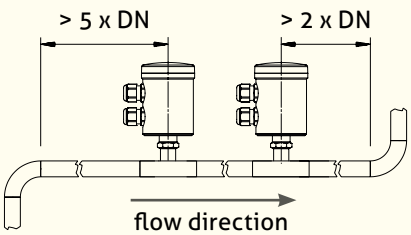

Dimensions table Varivent

Type	Ø A [mm / inch]	Ø B [mm / inch]
V25	66.0 / 2.60	53.0 / 2.09
V40	84.0 / 3.31	71.0 / 2.79

Tri-Clamp size

Type	Ø A [mm / inch]
TC1/TL1	50.5 / 1.99
TC2/TL2	64.0 / 2.52
T25/TL5	77.5 / 3.05
TC3/TL3	91.0 / 3.58

HUR / Head Unit Remote Version

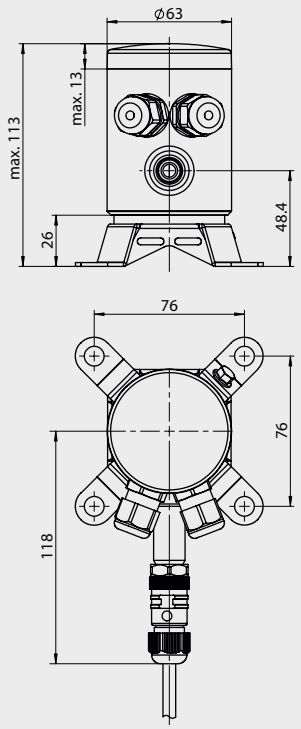

ITM-51R-S01

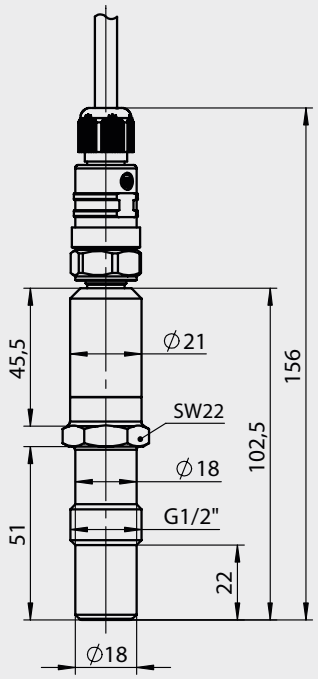

ITM-51R-S0L

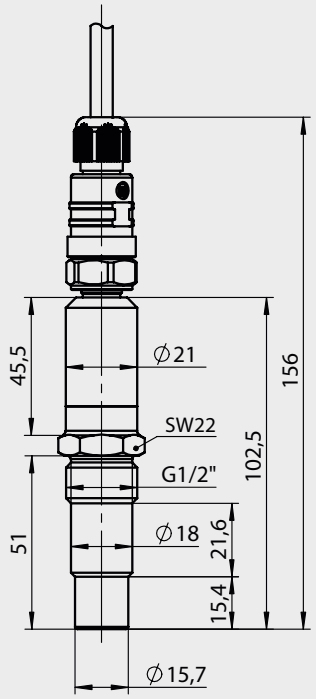

ITM-51R-Vxx

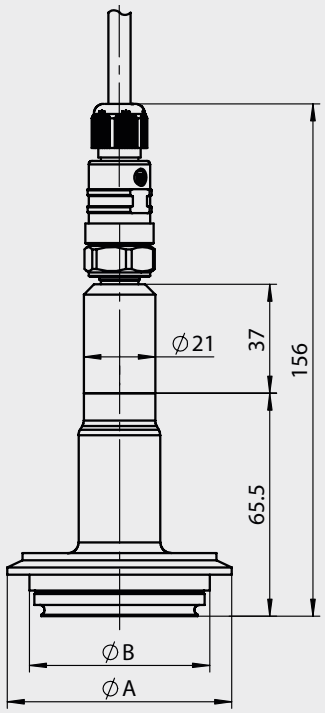

ITM-51R-TCx

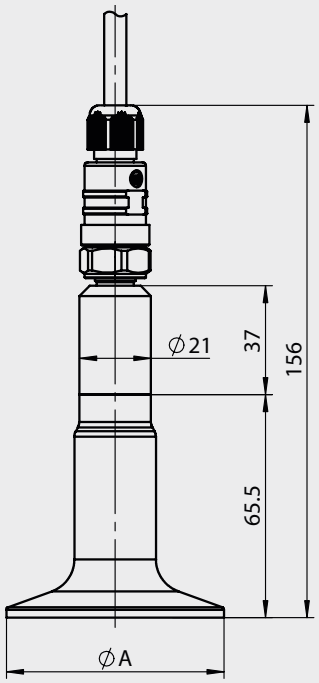

ITM-51R-TLx

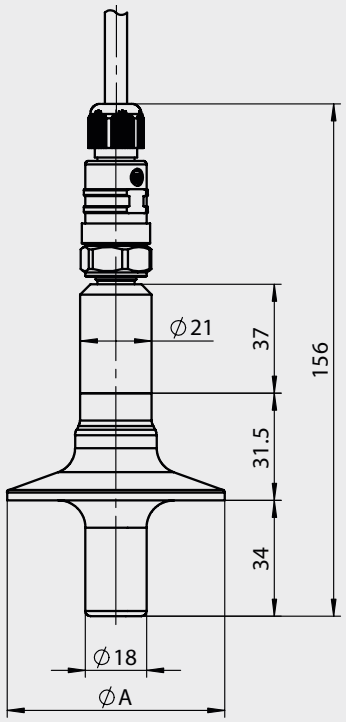

Note on 3-A Sanitary Standard 46-

Information on installation according to 3-A standard is available on our website:
www.anderson-negele.com/3A46.pdf

Click on the PDF icon to download the document.

Click or Scan

Note on EHEDG Hygienic Standard Type EL Class I

Information on installation according to EHEDG standard is available on our website:
www.anderson-negele.com/EHEDG.pdf

Click on the PDF icon to download the document.

Click or Scan

Application / Function	Signal module	I42	I52	I53
IO-Link communication X3		✓	✓	✓
1x 4...20 mA turbidity		✓	✓	✓
1x switch output		⊖	✓	✓
1x digital input for external range switching		⊖	⊖	✓

Table electrical connection

Type	Connection		Pin assignment			
P (1x PG) D (2x PG)	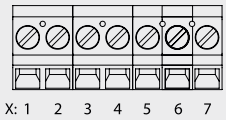	Clamps	1: Power supply +24 V DC 2: Power supply - 3: Digital input X3 4: Analog output X45 + 5: Analog output X45 - 6: Relay output X67 7: Relay output X67	✓	✓	✓
A (2x M12)	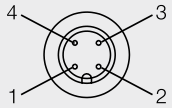	4 pin	1: Analog output X45 - 2: Analog output X45 + 3: Power supply +24 V DC 4: Power supply -	⊖	✓	✓
	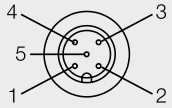	5 pin	1: Relay output X67 2: Not assigned 3: Not assigned 4: Relay output X67 5: Digital input X3			
M (1x M12)	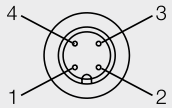	4 pin	1: Power supply +24 V DC 2: Analog output X45 + 3: Analog output X45 - 4: Power supply -	✓	⊖	⊖
N (2x M12)	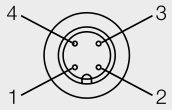	4 pin	1: Analog output X45 + 2: Relay output X67 3: Relay output X67 4: Analog output X45 -	⊖	✓	✓
	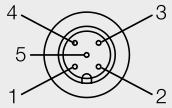	5 pin	1: Power supply +24 V DC 2: Not assigned 3: Not assigned 4: Power supply - 5: Digital input X3			
C (1x M12) IO-Link	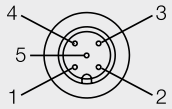	5 pin	1: Power supply +24 V DC 2: Analog output X45 - 3: Power supply - 4: IO-Link 5: Analog output X45 +	✓	⊖	⊖
R (2x M12) IO-Link	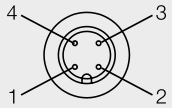	4 pin	1: Analog output X45 + 2: Relay output X67 3: Relay output X67 4: Analog output X45 -	⊖	✓	✓
	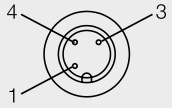	3 pin	1: Power supply +24 V DC 3: Power supply - 4: IO-Link / Digital input X3			

Note

This product information is not an operating manual. Please note the information on device safety, installation and operation in the product operating manual.

Order code

ITM-51 Relative turbidity meter
ITM-51R Relative turbidity meter, remote version, remote cable must be ordered seperately

Process connection (Ⓐ: 3-A conform, Ⓔ: EHEDG approval)

- **S0L** CLEANadapt G1/2", extended sensor stem
- **S01** CLEANadapt G1/2"
- **TC1** Tri-Clamp 1½" Ⓐ Ⓔ
- **TC2** Tri-Clamp 2" Ⓐ Ⓔ
- **T25** Tri-Clamp 2½" Ⓐ Ⓔ
- **TC3** Tri-Clamp 3" Ⓐ Ⓔ
- **TL1** Tri-Clamp 1½", extended sensor stem Ⓐ Ⓔ
- **TL2** Tri-Clamp 2", extended sensor stem Ⓐ Ⓔ
- **TL5** Tri-Clamp 2½", extended sensor stem Ⓐ Ⓔ
- **TL3** Tri-Clamp 3", extended sensor stem Ⓐ Ⓔ
- **V25** Varivent type F (only available for tank flanges) Ⓔ
- **V40** Varivent type N, DN 40/50 Ⓔ

Enclosure orientation (not selectable for ITM-51R)

- **H** Horizontal
- **V** Vertical

Signal module

- **I42** IO-Link and 1x 4...20 mA turbidity
- **I52** IO-Link and 1x 4...20 mA turbidity, 1x switching out
- **I53** IO-Link and 1x 4...20 mA turbidity, 1x switching out, external range switching

Electrical connection

- **P** Cable gland M16x1.5
- **D** 2x cable gland M16x1.5
- **M** 1x M12 connector, 4 pin output/power supply
- **N** 2x M12 connector, 4 pin output, 5 pin input/power supply
- **A** 2x M12 connector, 4 pin output/power supply, 5 pin output/input
- **C** 1x M12 connector, 5 pin analog output and IO-Link
- **R** 2x M12 connector, 4 pin analog and switching output, 3 pin IO-Link and input

Interface/Display

- **X** Without Interface
- **S** Simple User Interface with small display
- **L** Large User Interface with display

Enclosure

- **X** Opaque plastic cap
- **P** Clear plastic cap
- **M** Without control window
- **W** With control window

Configuration

- **X** Factory setting
- **S** Special customer setting

ITM-51 /	**S01 /**	**V /**	**I53 /**	**D /**	**L /**	**P /**	**X**
ITM-51R /	**S01 /**		**I42 /**	**D /**	**L /**	**P /**	**X**

Accessories

PVC-cable, 8 pin, twisted pair unshielded, IP69K
Length selectable in steps of 1 meter, 30 m max.

M12-PVC / 8-PBT	M12 plug/coupling made of PBT plastic
M12-PVC / 8-SS	M12 plug/coupling made of stainless steel

46553A0001	Display Module Large User Interface (LUI)
46552A0001	Display Module Simple User Interface (SUI)

Information

The components ITM-51S/sensor and HUR/Head Unit Remote can be purchased as spare parts separately. The valid configuration can be seen on the product labels.

ANDERSON INSTRUMENT COMPANY
156 Auriesville Road
Fultonville, NY 12072, USA
Phone 800-833-0081
info@anderson-negele.com
techservice@anderson-negele.com

NEGELE MESSTECHNIK GMBH
Raiffeisenweg 7
87743 Egg an der Guenz, GERMANY
Phone +49 (0) 83 33 . 92 04 - 0
sales@anderson-negele.com
support@anderson-negele.com