TECHNICAL SHEET

V32-93Y

Standard Reciprocating SERIES

LEGAL DISCLAIMER:
While Frascold has made every effort at the time of publication to ensure the accuracy of the information provided herein, product specifications and performances could be subject to change without notice.

Technical data - V32-93Y

Number of pistons		4
Nominal motor power	HP	32
Nominal motor power	kW	23,9
Displacement @ (1450 rpm - 50 Hz)	m^3/h	93,1
Displacement @ (1740 rpm - 60 Hz)	m^3/h	111,7
Power supply	V/ph/Hz/Connection	400/3/50/PWS
MRA	A	53,1
LRA	A	144,5
LRA DOL	A	239,2
Power supply (optional)	V/ph/Hz/Connection	230/3/50/DOL-DELTA
MRA	A	98,7
LRA	A	389
LRA DOL	A	null
Maximum frequency	Hz	70
Minimum frequency	Hz	30
Net weight	kg	192
Lubricant		FRASCOLD POE68
Oil charge	l	4
Maximum operating pressure HP	bar	30
Maximum static pressure LP	bar	20,5
Capacity step	%	100-75-50

Standard accessories - V32-93Y

Suction and discharge valves with soldering connection	
Packing ensuring proper handling and protection	
PTC discharge temperature sensor	T00EC50-RIC
Electronic oil pressure switch	T00EC1630DRIC
IP65 terminal box	
Oil level sight glass(es)	
Electronic protection and diagnostic module INT69TML Diagnose	T00ECA11D
Rubber vibration dampers (4 pcs)	
Nitrogen protective charge	

Optional accessories - V32-93Y

Special voltage for electrical motor	
Crankcase heater	
CC capacity control head	
RSH capacity control head	
US unloaded start head	
Electronic oil level switch	T00WK252
Head Cooling Fan	
FLI liquid injection kit	
Oil Equalizing Fitting with valve	
USB adapter for Diagnose	T00EC57
Bluetooth Module for Diagnose	T00EC69
Modbus connection cable	T00EC65
DP-Modbus gateway	T00EC59
Special painting	

CAD drawings - V32-93Y

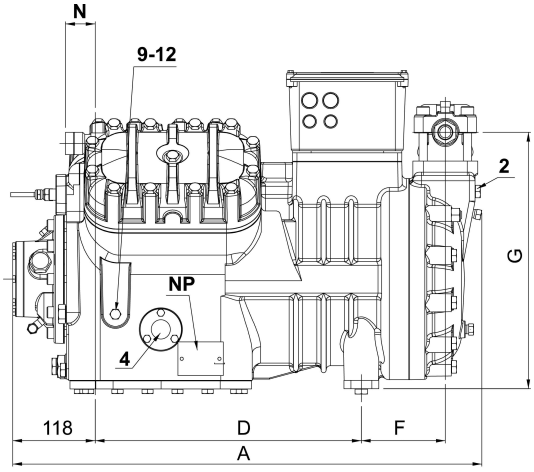

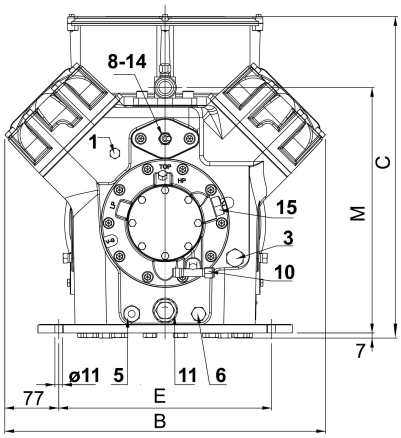

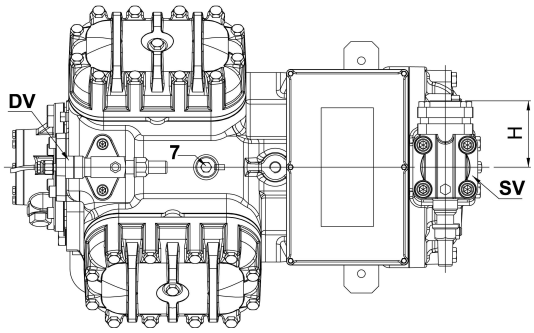

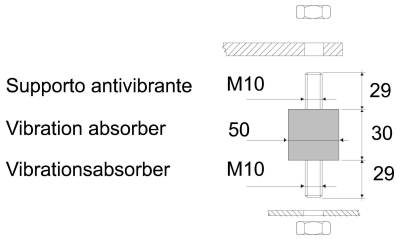

Position and connections:

SV: Suction Valve	mm	54
SV: Suction Valve	inch	2 1/8"
DV: Discharge valve	mm	35
DV: Discharge valve	inch	1 3/8"
A: Length	mm	743
B: Width	mm	460
C: Height	mm	463
D: Base mounting	mm	381
E: Base mounting	mm	305
F: Suction Valve	mm	158
G: Suction Valve	mm	389
H: Suction Valve	mm	130
L: Discharge valve	mm	152
M: Discharge valve	mm	352
N: Discharge valve	mm	48
1: High pressure connection		1/8" NPT
2: Low pressure connection		1/4" NPT
3: Oil charge plug		3/8" GAS
4: Oil level sight glass		-
5: Crankcase heater seat		-
6: Oil drain plug		1/4" GAS
7: Liquid injection plug		1/4" NPT
8: Liquid injection sensor plug		1/8" NPT
9: Oil pressure switch connection (LP)		1/4" NPT
10: Oil pressure switch connection (HP)		1/4" SAE
11: Oil filter		3/8" GAS
12: Oil return plug		1/4" NPT
14: Max discharge temperature sensor connection		1/8" NPT
15: Electronic oil pressure switch connection		3/4 UNF
NP: Nameplate		-