DRG No. 3191

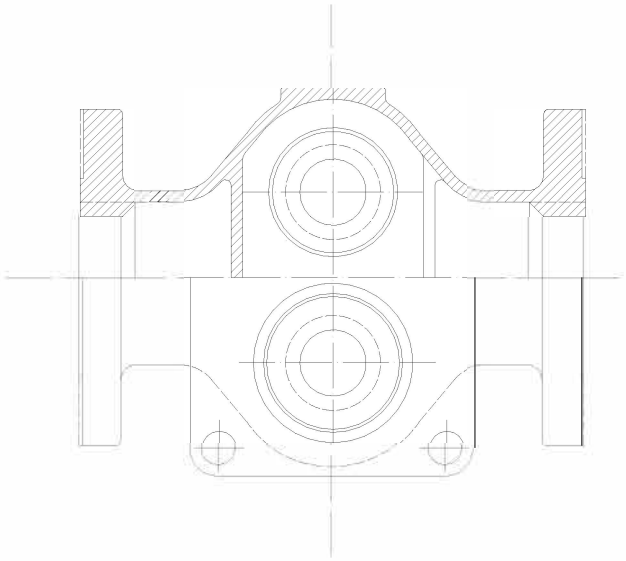

FLANGE FACING AND DRILLING								
VALVE	FLANGE Ø	D Ø	G	T	R	N	B Ø	C Ø
M65T	PN6	160	110	14	3	4	14	130
	PN10/16	185	122	18	3	4	18	145
	PN25/40	185	122	22	3	8	18	145
	ASA 150	177.8	104.8	22.8	1.6	4	19	139.7
	ASA 300	190.5	104.8	25.4	1.6	8	22.2	149.2
M80T	PN6	190	128	14	3	4	18	150
	PN10/16	200	138	20	3	8	18	160
	PN25/40	200	160	20	3	8	18	160
	ASA 150	190.5	127.0	23.8	1.6	4	19	152.4
	ASA 300 /600	209.6	127.0	28.6	1.6	8	22.2	168.3

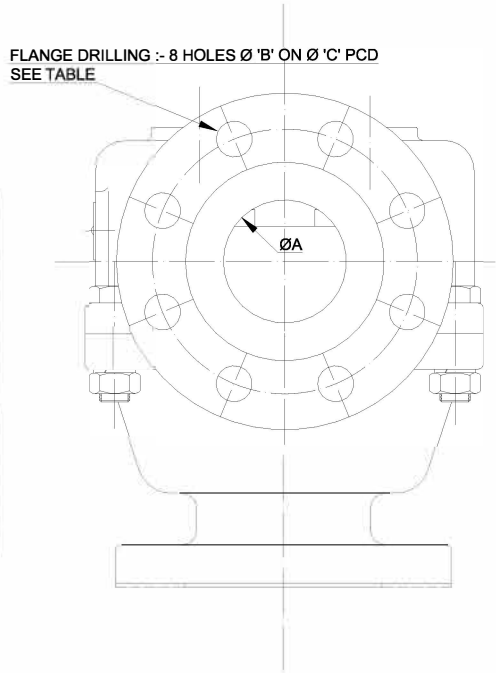

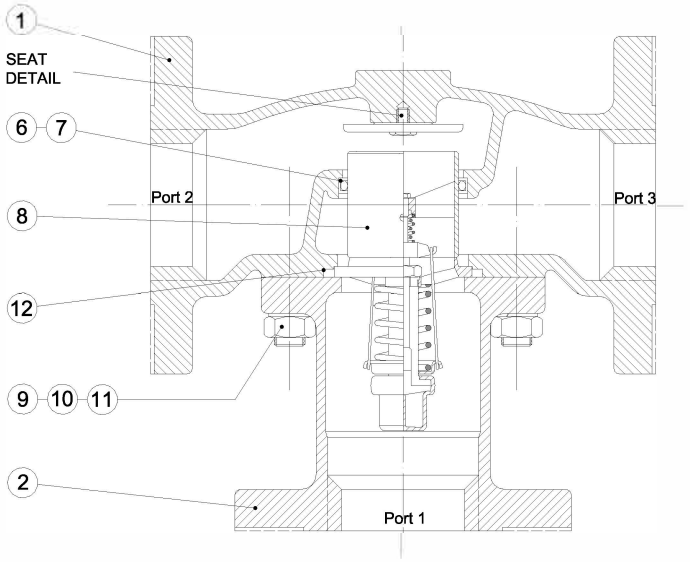

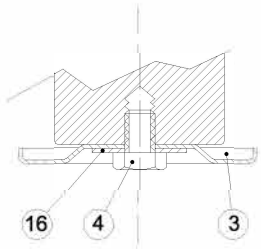

SEAT DETAIL

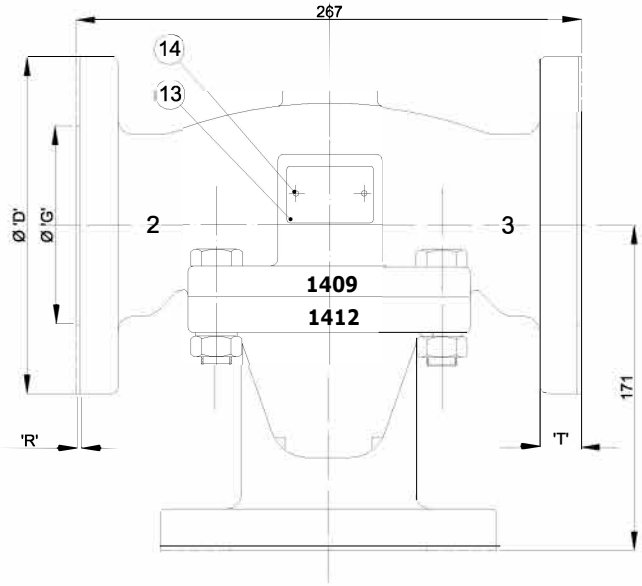

No.	DESCRIPTION	CHK'D	APP'D	DATE
REVISIONS				

TITLE

ASSEMBLY M65T /M80T STEEL & STAINLESS STANDARD

THERMOREG PRODUCTS LTD. Mildenhall Suffolk Eng.

TOLERANCES
BASIC MM ±
ONE DEC PLACE ±
TWO DEC PLACES ±
MATERIAL

DRAWN	TRACED	CHECKED	APPROVED	DATE	SCALE
M.Frost					1:4

DRAWING No. 3191