P045FC02C0-QB3ST

Configuration

Type:	**P**
Size:	**045**
Input:	**71 B14 ø105**
Output shaft/bore:	**ø18**
Mounting:	**FC** (Output flange)
Mounting position:	**B3**
Input bore:	**Standard**
Coupling:	**-**

Distributor data

Customer:

Lead time:

Technical data

Input rpm (n_1):	**1400 min^{-1}**
Output rpm (n_2):	**140.00 min^{-1}**
Ratio (i):	**10**
Nominal power (P_{1R}):	**0.57 kW**
Nominal torque (M_{2R}):	**30 Nm**
Dynamic efficiency (RD):	**79%**

Direction of rotation

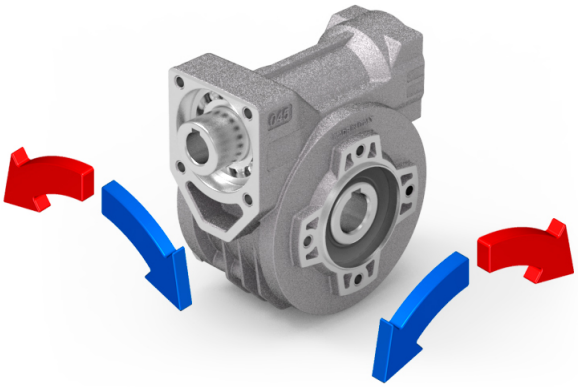

Selection

Motor power (P_{1M}):	**0.37 kW**
Output torque (M_{2M}):	**20 Nm**
Service factor (f.s.):	**1.5**

Lubrication

Oil quantity:	**0.09l**
ENI:	**Telium VSF 320**
SHELL:	**Omala S4 WE 320**

Axial and radial loads

Output shaft

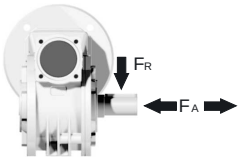

n_2 (min^{-1})	FA (N)	FR (N)
200	180	900
150	200	1000
100	220	1100
75	240	1200
50	260	1400
25	300	1800
15	400	2000

On our website

Features	Calc. the overhung load
How to order	Irreversibility
Datasheet	Thermal limit
Accessories/options	Installation check list
Electric motors	Spare parts list
Selection guide - fs	Complete catalogue
Cross reference	Selection by power (xls)
Mounting pos. - lubricant	Atex certification

P045**FB**... Basic wormbox
Riduttore base

M. flanges	Kit code	øF	A
63B5	K050.4.041	138	74
71B5	K050.4.042	160	71.5
56B14	KC40.4.049	80	71.5
63B14	K050.4.047	90	74
71B14	K050.4.045	105	71.5

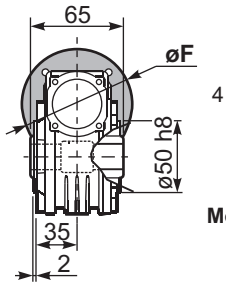

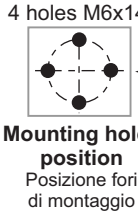

Mounting holes position
Posizione fori di montaggio

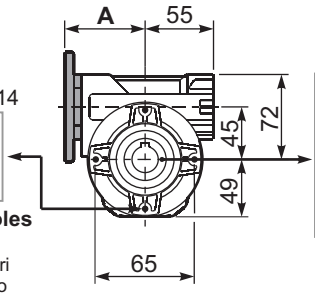

Gearbox weight peso riduttore	2.40 kg

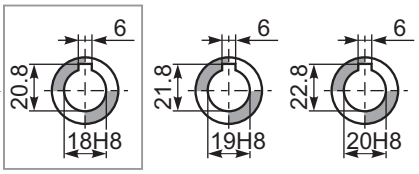

Standard Hollow shaft

On request A richiesta

P045**PA**... Feet
Piedini

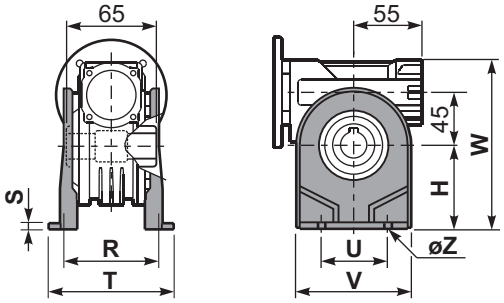

P045**PB**... Feet
Piedini

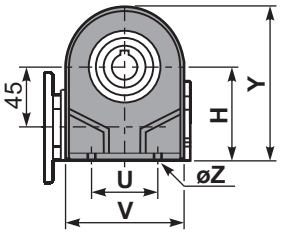

P045**PV**... Feet
Piedini

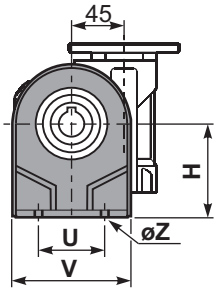

	H	R	S	T	U	V	Y	W	øZ	kit code
type **B**	72	81	3	100	52	98	121	144	ø10.5	K045.9.022
type **S**	71	84	8	100	70	90	120	143	ø8	KS045.9.023

P045**FC**... Output flange
Flangia uscita

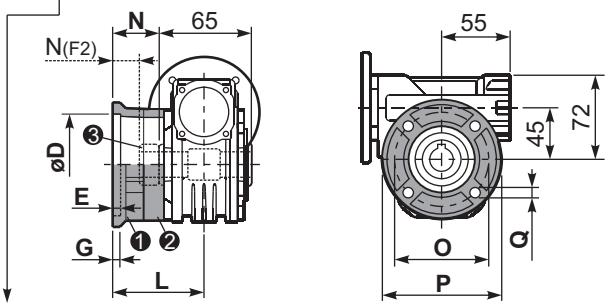

type **B**	øD	E	G	L	N	O	P	Q	kit code
FC	$60^{+0.15}_{+0.05}$	9	9	60.5	28	87	110	8.5	❶ K045.9.010 ❷ -
FL	$60^{+0.15}_{+0.05}$	9	9	90.5	58	87	110	8.5	❶ K045.9.010 ❷ K045.0.200

type **S**	øD	E	G	L	N	O	P	Q	kit code
F1	$95^{+0.20}_{+0.15}$	4	11	73.5	41	115	140	9	❶ KS045.9.013 ❷ -
F2	$60^{+0.15}_{+0.05}$	9	9	60.5	19	87	110	8.5	❶ KS045.9.010 ❸ S045.0.204
F3	$80^{+0.15}_{+0.10}$	3	8	51.5	19	100	120	9	❶ KS045.9.014 ❷ -

R045FB... Input shaft
Albero in entrata

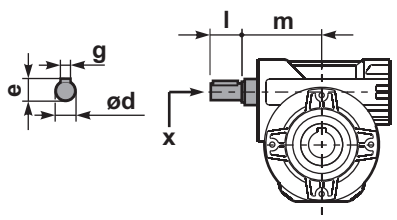

	ød	e	g	l	m	x	kit code
type **B**	11 h6	12.5	4	30	68	-	❶ K045.5.006 PAM71 ❷ -
type **S**	-	-	-	-	-	-	❶ - ❷ -

P045**BR**... Reaction arm
Braccio di reazione

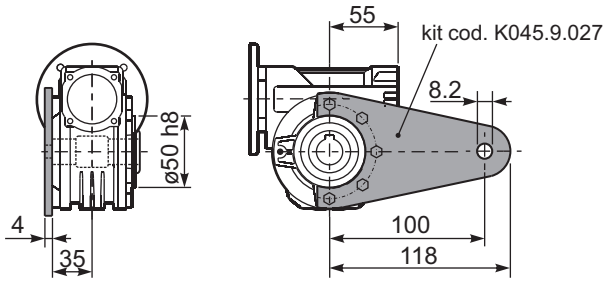

P045.....**S**... Single Shaft
Albero lento semplice

P045.....**D**... Double Shaft
Albero lento bisp.

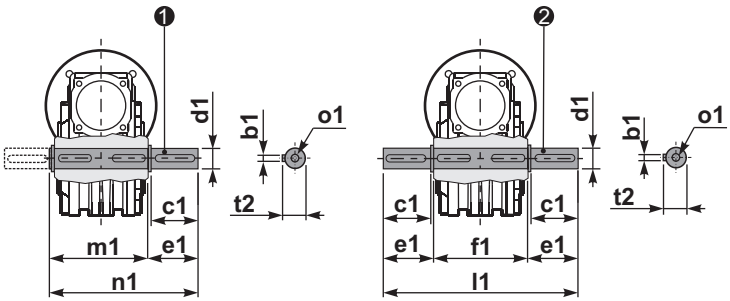

❶ kit cod. K045.5.028 type **B**
kit cod. KS045.5.030 type **S**

❷ kit cod. K045.5.029 type **B**

	b1	c1	d1	e1	f1	l1	m1	n1	t2	o1
type **B**	6	32	$18^{-0.005}_{-0.020}$	43	65	151	70	113	20.5	M6x18
type **S**	6	40	$19^{-0.005}_{-0.020}$	58.8	-	-	70	128.5	21.5	M8x20