

P2 系列 EC 轴流风机 910

EC Axial Fan-P2 Airfoil

Impeller Model 910

版本号/Version number: V1.2

2025-10-08

额定数据 Nominal data

型号 Type	EC180/120D3G01-AS910/85P2-01-B1	
相数 Phase	3~	
额定电压 Rated voltage	VAC	400
电压范围 Rated voltage range	VAC	380 ~ 480
频率 Frequency	Hz	50/60
转速 Speed (rpm)	min^{-1}	1080
额定功率 Power consumption	W	3200
电流 Current	A	5.0
最低环境温度 Min. ambient temperature	℃	-40
最高环境温度 Max. ambient temperature	℃	60

ErP 能效数据 ErP Energy efficiency data

		实际 Actual	规定 2015 Req. 2015
整体效率η_{es} Overall efficiency	%	49.6	36.8
测量类别 Measurement category		A	
效率类别 Efficiency category		静态 Static	
效率等级 N Efficiency grade N		50.4	40
转速调节 Variable speed drive		是 Yes	

*注：此文件仅供选型参考，如您有任何疑问或需要进一步的技术支持，请随时与我们联系。

Please note that this document is intended solely for selection reference. Should you have any inquiries or require additional technical support, do not hesitate to reach out to us.

特性曲线及数据 Characteristic curve and data

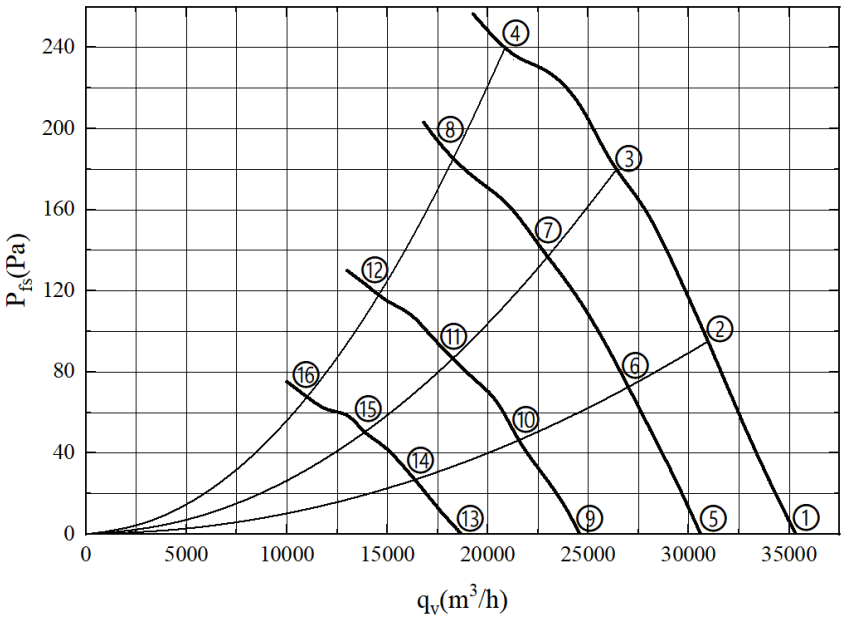

	电压	频率	转速	功率	电流	噪声	风量	静压	风量
	Rated voltage	Frequency	Speed	Power	Current	Noise	Air flow	Static pressure	Air flow
	U(V)	f(Hz)	n(r/min)	P_{ed}(W)	I(A)	L_p(dB(A))	$q_v(m^3/h)$	p_{fs}(Pa)	q_v(cfm)
1	400	50	1080	2009	3.5	80	35323	0	20790
2	400	50	1080	2490	3.9	78	30949	95	18216
3	400	50	1080	2931	4.6	78	26414	180	15547
4	400	50	1080	3289	5.2	81	20864	240	12280
5	400	50	945	1368	2.5	76	30595	0	18008
6	400	50	945	1822	2.9	74	25178	61	14819
7	400	50	945	2043	3.2	75	21429	116	12613
8	400	50	945	2224	3.5	81	17040	156	10029
9	400	50	760	753	1.4	70	24580	0	14467
10	400	50	760	990	1.5	69	20093	39	11826
11	400	50	760	1151	1.7	68	17019	73	10017
12	400	50	760	1195	1.9	75	13577	100	7991
13	400	50	585	378	1.0	67	18706	0	11010
14	400	50	585	466	1.1	68	15254	23	8978
15	400	50	585	513	1.2	67	12944	42	7619
16	400	50	585	557	1.2	71	10272	57	6046

技术说明 Technical description

净重 Net weight			57kg
毛重 Gross weight			68kg
包装尺寸 Package size			112*112*37cm
叶轮型号 Impeller model			910
电机型号 Motor model			180
转子表面 Rotor surface			黑色喷塑 Painted black
叶轮材料 Impeller material			PP 塑料 PP Plastic
方框材料 Square frame material			钢制，黑色喷塑 Sheet steel, painted black
网罩材料 Grid material			钢制，黑色喷塑 Sheet steel, painted black
叶片数量 Number of blades			5
旋转方向 Direction of rotation			CW（从转子端看）Viewed toward rotor
防护等级 Degree of protection			IP54
安装方式 Installation type			轴水平安装或转子向下安装 Shaft horizontal or rotor downward installation
绝缘等级 Insulation class			F
储存环境温度 Storage temperature			-40℃～+80℃
运行模式 Mode			S1
振动 Vibration			≤4.6mm/s
动平衡 Dynamic balance			G4.0
轴承 Bearing			滚珠球轴承 Ball bearing
风机寿命 Life time	小时 Hour	40,000	额定电压，风机全速运转，40℃环境 At nominal voltage, running at full speed, environment temperature 40℃
电磁兼容 EMC			工业级 Industrial
启动电压 Starting voltage			1V
电源线对地耐电压 Power line to ground withstand voltage			DC2500V/1min
控制特点 Control characteristics			0-10 VDC / PWM 控制输入端 0-10 VDC / PWM speed regulation
			输出端 10VDC，最大 3.5mA Output terminal +10VDC, 3.5mA max
			集成的 PID 控制器 Integrated PID controller
			电机软件过热保护 Motor software overheat protection
			软启动 Soft Start
			RS485 MODBUS-RTU
			报警继电器 Alarm relay
			低电压/相故障检测 Under volt/Phase failure protection

产品图纸　Product drawing

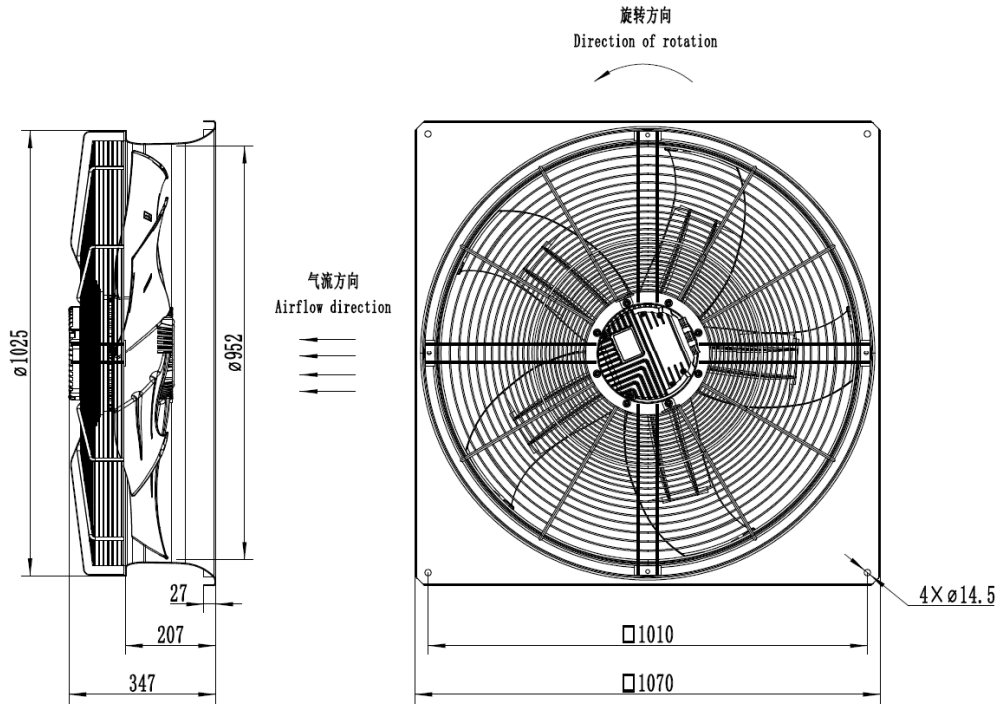

线路图 Connection diagram

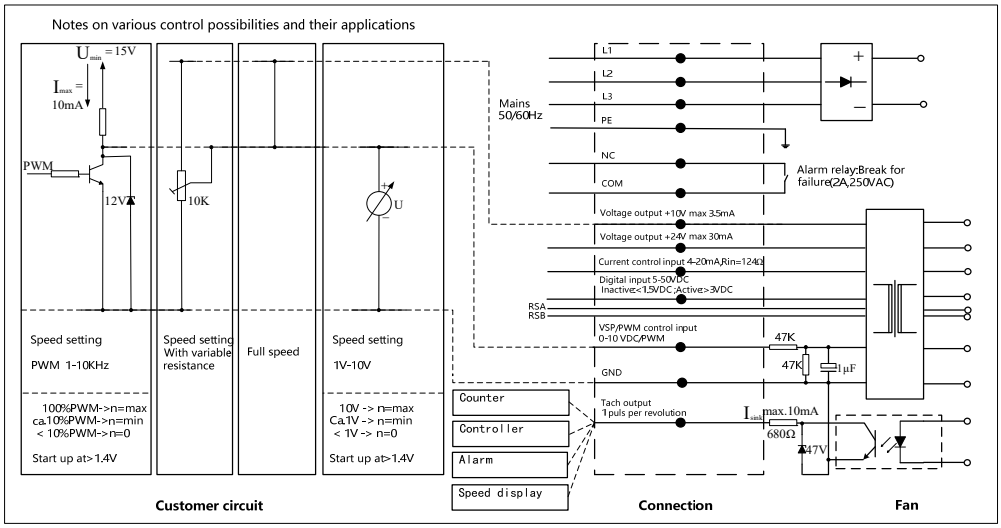

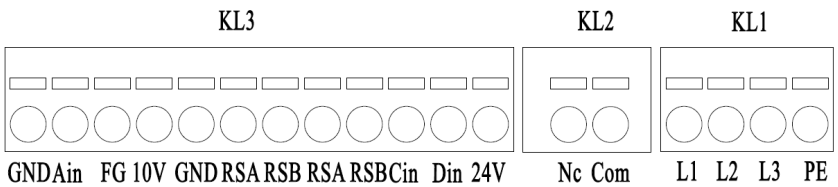

Terminal	NO.	Connection	Function
KL1	1	L1	电源相线，电压范围见铭牌 Power supply phase wire, voltage range, show on the nameplate
	2	L2	电源相线，电压范围见铭牌 Power supply phase wire, voltage range, show on the nameplate
	3	L3	电源相线，电压范围见铭牌 Power supply phase wire, voltage range, show on the nameplate
	4	PE	保护接地 Protective earth
KL2	1	NC	状态继电器，浮动状态触点，故障或断电后断开 Status relay, floating status contact, break for failure
	2	COM	状态继电器，浮动状态触点，触点额定值250VAC/2A (AC1)最小10mA Status relay, floating status contact, contact rating 250VAC/2A (AC1)min.10mA
KL3	1	GND	控制接口部分参考地 Reference ground for control interface
	2	Ain(0-10V/ PWM)	控制0~10V或PWM输入，内部阻抗为100K Control input 0-10V or PWM, internal impedance 100K
	3	FG(Tacho)	输出：1脉冲/每转 Tach output: 1 pulse/revolution
	4	10V(+10V/ max.3.5mA)	电压输出，给外部设备提供电源 Voltage output, power supply for ext. device
	5	GND	控制接口部分参考地 Reference ground for control interface
	6, 8	RSA	MODBUS的RS485接口A RS485 interface for MODBUS, RSA
	7, 9	RSB	MODBUS的RS485接口B RS485 interface for MODBUS, RSB
	10	Cin(4-20mA)	模拟量输入，测量值4~20mA，内阻124欧 Analog input, measured value 4-20mA, Rin=124ohm
	11	DIN	数字量输入5~50VDC激活设备 有效电平：电压值＞3VDC；无效电平：电压值＜1.5VDC Digital input 5-50VDC activate electronics Active: voltage>3VDC; Inactive: voltage<1.5VDC
	12	24V(+24V/ max. 30mA)	电压输出，给外部设备提供电源 Voltage output, power supply for ext. device