Rev.002.1

Nabtesco®
Nabtesco Corporation

Europe and Africa

Nabtesco Precision Europe GmbH
Tiefenbroicher Weg 15, 40472 Düsseldorf, Germany
TEL: +49-211-173790 FAX: +49-211-364677
E-MAIL: info@nabtesco.de www.nabtesco.de

North and South America

Nabtesco Motion Control Inc.
23976 Freeway Park Drive, Farmington Hills, MI 48335, USA
TEL: +1-248-553-3020 FAX: +1-248-553-3070
E-MAIL: engineer@nabtescomotioncontrol.com www.nabtescomotioncontrol.com

China

Shanghai Nabtesco Motion-equipment Co., Ltd.
Room 1706, No. 388 Fu Shan Road, Pudong New Area, Shanghai 200122, China
TEL: +86-21-3363-2200 FAX: +86-21-3363-2655
E-MAIL: info@nabtesco-motion.cn www.nabtesco-motion.cn

India

Nabtesco India Private Limited
Site No.485/9, 14th Cross, Peenya Industrial Area, 4th Phase, Bangalore -560 058 Karnataka India
TEL: +91-80-4123-4901 FAX: +91-80-4123-4903
E-MAIL: Nti_pn@nabtesco.co.in www.nabtesco.co.in

Asia and others

Nabtesco Corporation
Nagoya Sales Office
9th Fl, Nagoya 2nd Saitama Bldg., 2-28 Meieki 4-chome, Nakamura-ku, Nagoya 450-0002, Japan
TEL: +81-52-582-2981 FAX: +81-52-582-2987

Customer Support Center
594 Icchoda, Katada-cho, Tsu, Mie 514-8533, Japan
TEL: +81-59-237-4672 FAX: +81-59-237-4697

E-MAIL: P_Information@nabtesco.com https://precision.nabtesco.com/ja/

- Nabtesco, RV, RVW, RVP, RVGREASE, and RVOIL are registered trademarks or trademarks of Nabtesco Corporation.
- KHK is a registered trademark or trademark of Kohara Gear Industry Co., Ltd.
- Specifications are subject to change without notice.
- The PDF data of this catalog can be downloaded from the following website.
  https://precision.nabtesco.com/
  If any addition or modification is made to the published information, the PDF data may be updated before the printed catalog.
  Due to this, please note that some contents of the PDF data may be changed or revised from those in this catalog.
- Unauthorized reprinting, reproduction, copying, or translation of this catalog in whole or in part is strictly prohibited.
- © 2021 Nabtesco Corporation. All rights reserved.

MS JAB CM009 | ISO 14001 JQA-EM7212 | ISO 9001 JQA-1190 | ISO 45001 JQA-OH0278 | レジリエンス認証 事業継続および社会貢献 認証・登録番号EO0000053

CAT.211201 (Issued on November 10, 2022)

RV®

Nabtesco

PRECISION REDUCTION GEARS

PRODUCT GUIDE

Nabtesco

Our innovative motion control technologies deliver safety, security and comfort in the transport and lifestyle fields

Nabtesco Corporation was founded in 2003 through the merger of Nabco, Ltd. (est. 1925) and Teijin Seiki Co., Ltd. (est. 1944). The move combined Nabco's proven fluid and pneumatic control technologies with the cutting and assembly technologies developed by Teijin Seiki. Since this time, we have been working to build on the technological and business foundation inherited from both companies, with motion control technologies as our core. This focus has enabled us to expand our operations into a wide range of new fields.

Eight core products Nabtesco is contributing to society

Precision Reduction Gear

Precision reduction gears for joints of medium and large industrial robots

Global market share Approx. 60%

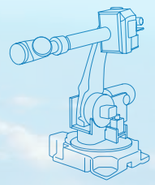

Hydraulic Equipment

Traveling units for hydraulic excavators

Global market share Approx. 25%

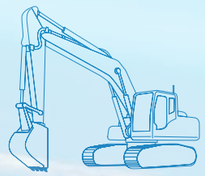

Railroad Vehicle Equipment

Door operators for railroad vehicles

Japanese market share Approx. 60%

Brake systems for railroad vehicles

Japanese market share Approx. 50%

Aircraft Equipment

Flight control actuation systems

Share for domestically produced aircraft Approx. 100%

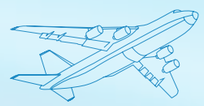

Marine Vessel Equipment

Engine remote control systems for vessels

Global market share Approx. 40%

Commercial Vehicle Equipment

Air dryers for commercial vehicles

Japanese market share Approx. 70%

Wedge brake chambers for commercial vehicles

Japanese market share Approx. 75%

Automatic Doors

Automatic doors for buildings

Global market share Approx. 20%

Japanese market share Approx. 55%

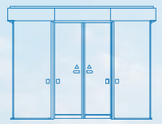

Packaging Machines

Automatic filler/sealers for retort pouch foods

Japanese market share Approx. 85%

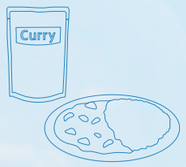

Please see our Website for details about the sources of data for market shares.

© 2021 Nabtesco Corporation. All rights reserved.

RV®

Precision Reduction Gear RV™

Supporting a Wide Range of Cutting-Edge Industries around the World

Nabtesco's Precision Reduction Gear RV™ is key components used in the joints of industrial robots, enabling precise movement while maintaining optimum power.
Nabtesco has more than 30 years of experience in this field and currently holds a major share of the global market. We are also actively working to expand applications for our gears into new fields, including machine tools as well as FPD and semiconductor production systems.

RV® Global Business Network

© 2021 Nabtesco Corporation. All rights reserved.

Operating Principle

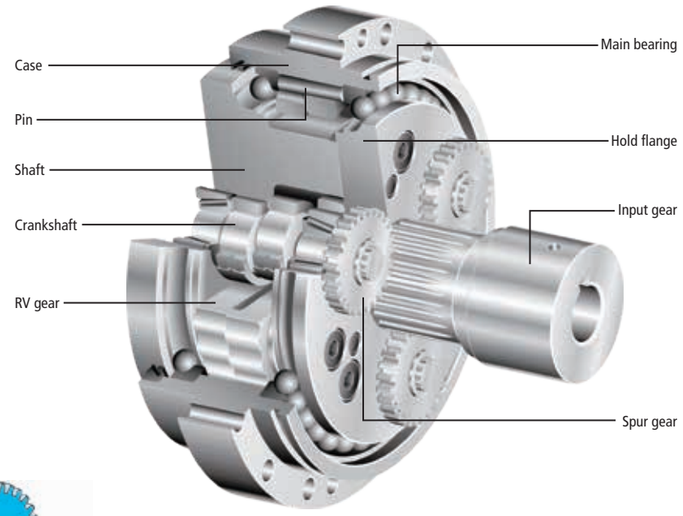

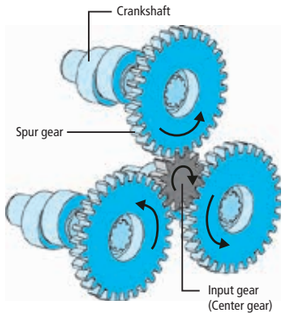

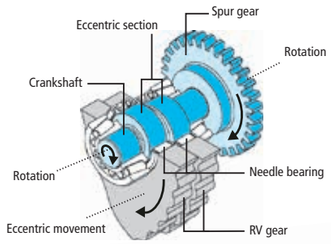

1. Rotation of the servomotor is transmitted through the input gear to the spur gears, and the speed is reduced according to the gear ratio between the input gear and the spur gears.
2. The crankshafts rotate at the same speed, as they are directly connected to the spur gears.
3. Two RV gears are mounted on crankshafts with needle bearings.
4. When the crankshafts rotate, the RV gears rotate eccentrically.
5. The pins are arrayed in grooves inside the case. The number of pins is one more than the number of teeth on the RV gear.
6. When the crankshafts make one complete rotation, the RV gear teeth rotate one step in the opposite direction.
7. The rotation is transmitted to the output shaft via the crankshafts. The rotation speed of the crankshafts is reduced according to the number of pins.
8. The total speed ratio is a product of the speed ratio of the 1st and 2nd stage reduction.

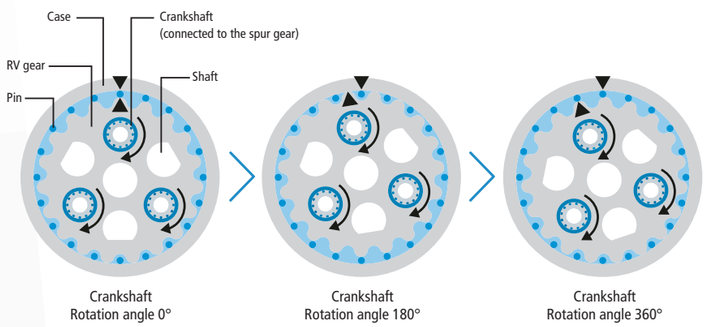

© 2021 Nabtesco Corporation. All rights reserved.

Structure and Features

2-Stage Reduction Structure

Speed reduction by 1st stage (spur gears) & 2nd stage (pin & gear)

FEATURES & ADVANTAGES	BENEFITS
Changeable speed ratio Wide range of speed ratios with the same outer diameter (low speed ratio – high speed ratio)	More compact machine High speed ratio enables smaller servomotor
Low speed rotation of the inner components (the RV gear) Minimal vibration	Enhanced machine accuracy Reduced heat build-up
Small input part (input gear) Low inertia	Smaller servomotor needed

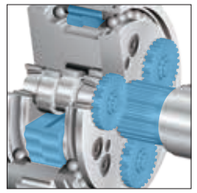

Pin & Gear Structure

The arrayed pins on the inner side of the case & the RV gears

FEATURES & ADVANTAGES	BENEFITS
The large number of simultaneous engagement of pins & teeth of the RV gears Minimal backlash & lost motion (≤ 1 arc.min.) High shock load resistance (withstands 5 x rated torque)	Enhanced machine accuracy Enhanced machine durability

*Excluding some models

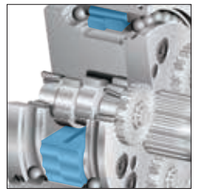

Rolling Contact Structure

Roller bearings

FEATURES & ADVANTAGES	BENEFITS
Low friction Excellent start efficiency Minimal backlash & lost motion	Energy saving (smaller servomotor) Enhanced machine accuracy
Low wear Low material degradation	Easy maintenance (no backlash adjustment)

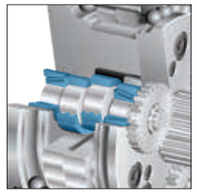

Integrated Outer Load Support Bearings Structure

Original angular ball bearings

FEATURES & ADVANTAGES	BENEFITS
Large load capacity (no need for additional support structures) e.g. RS-900A Allowable thrust load (N): 88,200 N Allowable moment: 44,100 Nm	Reduced assembly man-hours

Two-sided Support Structure

Crankshafts supported by the shaft & the hold flange

FEATURES & ADVANTAGES	BENEFITS
High resistance against force High torsional rigidity Minimal vibration High shock load resistance (withstands 5 x rated torque)	Enhanced machine accuracy Enhanced machine durability

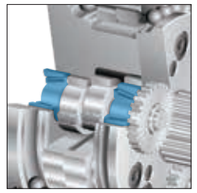

© 2021 Nabtesco Corporation. All rights reserved.

Used in so many places!
Precision Reduction Gear RV™

Our reduction gears are actually installed in most motor-powered machines and equipment.
Yet, since they are usually mounted inside these systems, people seldom have a chance to see them in operation.
The following is a brief introduction to the types of machines and equipment in which our
Precision Reduction Gear RV™ is used.

Welding process

Logistics / Transportation

FPD / Semiconductor manufacturing process

Machine tools

© 2021 Nabtesco Corporation. All rights reserved.
© 2021 Nabtesco Corporation. All rights reserved.

RV® INDEX by application

Robot

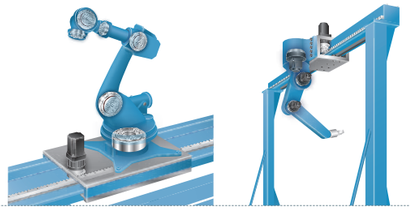

Vertical Articulated Robot Shaft Drives

RV™-N P.11 | RV™-E P.18 | RV™-Z/ZC P.16 | RV™-C/CA P.13

Slider / Gantry

GH P.41

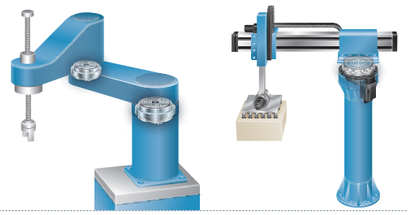

SCARA, Pick & Place

RV™-N P.11 | RV™-E P.18 | RV™-Z/ZC P.16 | RV™-C/CA P.13

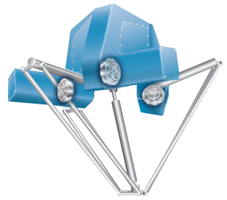

Parallel Link

RF-P P.15

Machine Tools

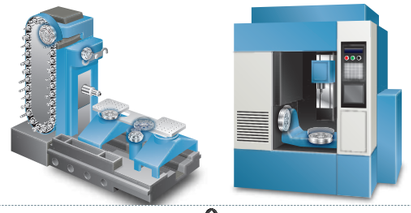

Trunnion Table

RD2 P.25

ATC

RA-EA/EC P.43 | AF P.45

APC

RD2 P.25 | AF P.45

Pipe Bending

RD2 P.25 | AF P.45

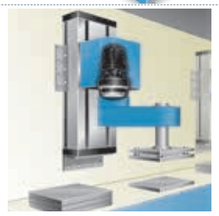

High Speed Rotation Table

GH P.41

Machine Head Indexer

RV™-N P.11 | RV™-E P.18 | RV™-Z/ZC P.16

Roller Rotation

GH P.41

Roller Indexer

RD2 (RDR) P.25

FPD

Stacker

RV™-Original P.17 | RD2 P.25

Inspection Equipment

RD2 P.25 | AF P.45

© 2021 Nabtesco Corporation. All rights reserved.

Welding

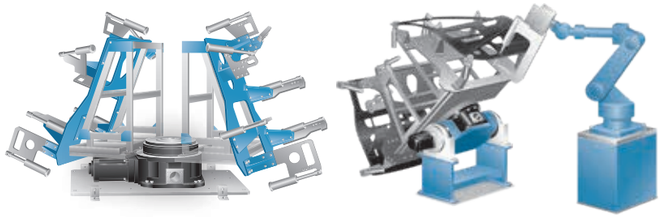

Turn Table

RVP®-C P.23 | RS P.31 | RH-C/CA P.35

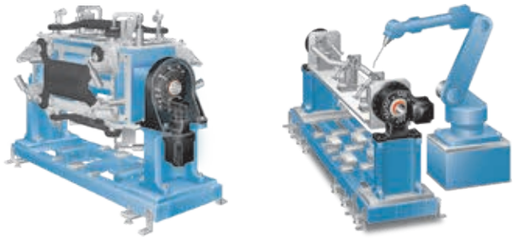

Positioner

RVP®-B P.21 | RD2 P.25 | RH-C/CA P.35 | AF P.45

Positioner

RVP®-A P.19

FA

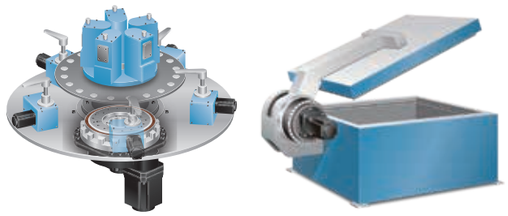

Indexer

RS P.31 | RD2 (RDR) P.25

High-load Cantilever Drive

RH-N P.33

Antenna

Shaft Drive

RD2 (RDS) P.25 | RH-C/CA P.35

Medical

Scanner

RD2 P.25

AGV

Mecanum Drive Unit

RVW® P.47

Wheel Drive

RF-P P.15 | GH P.41

© 2021 Nabtesco Corporation. All rights reserved.

RV® INDEX by product

COMPONENT SETS

Recommended for users who are thinking about creating their own free designs, using a single reduction gear with flanges and other items

RV™-N
T 245 to 28,000 Nm P.11
I 41 to 273
- Solid shaft
- Backlash 1 arc.min.

RV™-C/CA
T 98 to 11,760 Nm P.13
- Hollow shaft
- Backlash 1 arc.min.

RF-P
T 100 to 350 Nm P.15
I 19 to 51
- Solid shaft
- Backlash 2 arc.min.
- High speed

RV™-Z/ZC
T 265 to 12,000 Nm P.16
- Solid shaft / hollow shaft
- Backlash 1 arc.min.

RV™-Original
T 137 to 8,820 Nm P.17
I 57 to 192.42
- Solid shaft
- Backlash 1 arc.min.
- No support bearing

RV™-E
T 58 to 14,700 Nm P.18
I 31 to 236.29
- Solid shaft
- Backlash 1 arc.min.

GEARHEADS

Recommended for users who need a product that is pre-lubricated and attached to a motor flange, allowing it to be connected to a servomotor for immediate use

RD2 RD_-E
T 58 to 3,136 Nm P.25
I 31 to 185
- Solid shaft
- Backlash 1 to 2 arc.min.
- Support for three types of inputs (straight, right angle, pulley)

RD2 RD_-C
T 98 to 3,136 Nm P.27
I 81 to 356.5
- Hollow shaft
- Backlash 1 to 1.5 arc.min.
- Support for three types of inputs (straight, right angle, pulley)

RD2 Foot Type
P.29
- Base Flange for RD2

RS
T 490 to 8,820 Nm P.31
I 65.4 to 240
- Hollow shaft
- Backlash 1 to 1.5 arc.min.
- Right angle input
- Table type

RH-N
T 4,900 to 7,000 Nm P.33
I 81 to 284.4
- Solid shaft
- Backlash 1 arc.min.

RH-C/CA
T 1,470 to 8,820 Nm P.35
I 78.3 to 330
- Hollow shaft
- Backlash 1 arc.min.

Waterproof application
P.39
- Waterproof and rustproof
- Equivalent to IP X9K

Brake-assisted application
P.40
- Right angle input

GH
T 69 to 980 Nm P.41
I 11 to 31.4
- Solid shaft
- Backlash 6 arc.min.
- High speed

RA-EA/EC
T 167 to 1,568 Nm P.43
I 80 to 170
- Solid shaft
- Backlash 1 arc.min.
- For machine tools

HR
P.44
- Support of high vacuums

SERVO ACTUATORS

Recommended for users who need a product with an integrated design that is easy to install and operate (includes a servomotor connected to reduction gear)

AF-N
T 82 to 3,856 Nm P.45
I 81 to 252.33
- Solid shaft
- Backlash 1 arc.min.
- With servomotor

AF-C
T 460 to 3,002 Nm P.45
I 120 to 157
- Hollow shaft
- Backlash 1 arc.min.
- With servomotor

POSITIONER UNITS

Recommended for users who are looking for a positioner product that is compatible with all major servomotors and has a wide range of optional parts, enabling it to be used in combined operations with various robots

RVP®-A
T 980 to 1,600 Nm P.19
I 100.5 to 156
- 2-axis positioner unit
- Backlash 1 arc.min.

RVP®-B
T 980 to 1,568 Nm P.21
I 66 to 258
- BBQ positioner unit
- Backlash 1 to 1.5 arc.min.

RVP®-C
T 3,136 to 3,724 Nm P.23
I 170 to 706.5
- Variable tilt angle turntable unit
- Backlash 1 arc.min.

AGV DRIVE UNITS

Recommended for users who are seeking an AGV drive unit that is compact, thanks to its in-wheel design, yet can handle high loads and that can also be used simply by mounting it in a frame

RVW®
T 7 to 1,225 Nm P.47
I 30 to 80
- In-wheel design
- Loading capacity of 1,960 to 24,500 N

LUBRICANTS

Lubricants that unlock the true potential of our Precision Reduction Gear RV™

RVGREASE™ LB00
P.49

RVOIL™ SB150
P.50

T Rated torque I Standard ratio

© 2021 Nabtesco Corporation. All rights reserved.
© 2021 Nabtesco Corporation. All rights reserved.

RV™-N

PRODUCT WEB SITE

RV™-N

PRODUCT VIDEO

Our top-selling Precision Reduction Gear RV™, with a proven record in the robotics industry

Compact N Series gears deliver great potential!! Based on our Precision Reduction Gear RV™ which achieve 10 million units already shipped, the new RV™-N SERIES models have been made even more compact and lightweight.

FEATURES

- Compact body
- Lightweight
- High accuracy (backlash ≤ 1 arc.min.)
- High shock load resistance (withstands 5 x rated torque)
- Good accel. performance (up to 2.5 x rated torque)

ADVANTAGES

Dimensions 8 to 20% smaller

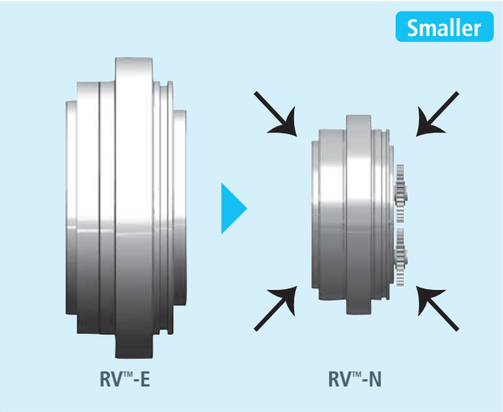

Weight 16 to 36% lighter

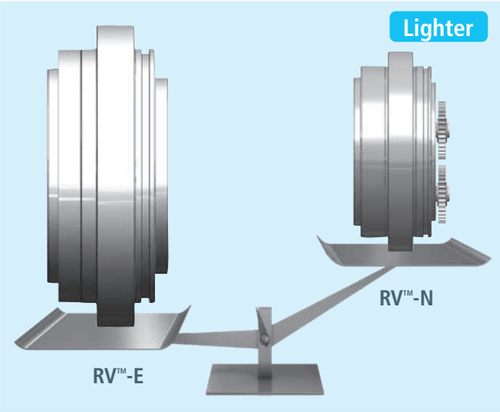

© 2021 Nabtesco Corporation. All rights reserved.

6-axis robot

SCARA robot

RV™-N SPECIFICATION

Model RV-	25N	42N	60N	80N	100N	125N	160N	380N	500N	700N	900N	2800N*2
Standard ratio	41 81 107.66*1 126 137 164.07*1	41 81 105 126 141 164.07*1	41 81 102.17*1 121 145.61*1 161	41 81 101 129 141 171	41 81 102.17*1 121 141 161	41 81 102.17*1 121 145.61*1 161	41 81 102.81*1 125.21*1 156 201	75 93 117 139 162 185	81 105 123 144 159 192.75	105 118 142.44 159 183 203.52*1	137.5 183 248 292.2 316.71*1	273
Rated torque (Nm)	245	412	600	784	1,000	1,225	1,600	3,724	4,900	7,000	9,000	28,000
Allowable acceleration/ deceleration torque (Nm)	612	1,029	1,500	1,960	2,500	3,062	4,000	9,310	12,250	17,500	22,500	70,000
Momentary max. allowable torque (Nm)	1,225	2,058	3,000	3,920	5,000	6,125	8,000	18,620	24,500	35,000	45,000	140,000
Rated output speed (rpm)	15	15	15	15	15	15	15	15	15	15	15	15
Allowable output speed: Duty ratio 40% (reference value) (rpm)	110	100	94	88	83	79	48	27	25	19	23	20
Rated service life (h)	6,000	6,000	6,000	6,000	6,000	6,000	6,000	6,000	6,000	6,000	6,000	6,000
Backlash/Lost motion (arc.min.)	1/1	1/1	1/1	1/1	1/1	1/1	1/1	1/1	1/1	1/1	1/1	2/2
Torsional rigidity (reference value) (Nm/arc.min.)	61	113	200	212	312	334	490	948	1,620	2,600	3,685	15,600
Allowable moment (Nm)	784	1,660	2,000	2,150	2,700	3,430	4,000	7,050	11,000	15,000	12,740	62,000
Allowable thrust load (N)	2,610	5,220	5,880	6,530	9,000	13,000	14,700	25,000	32,000	44,000	39,200	70,400

*1 These speed ratios are indivisible figures. *2 RV-2800N is designed for oil lubrication.

RV™-N DIMENSIONS

Model RV-	25N	42N	60N	80N	100N	125N	160N	380N	500N	700N	900N	2800N
A (Ømm)	133	159	183	189	208	221	238	295	325	395	440	720
B (Ømm)	94h7	118h7	140h7	140h7	160h7	160h7	179h7	222h7	253h7	315h7	335h7	560h7
C (mm)	62	65.5	69.5	74	80	80	104	131	137.5	170	195.5	270
D (Ømm)	113h7	136h7	160h7	160h7	179h7	186h7	202h7	252h7	284h7	350h7	364h7	633h8
Weight (kg)	3.8	6.3	8.9	9.3	13	13.9	22.1	44	57.2	102	157	583

RV™-N

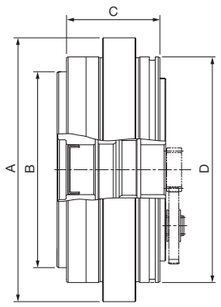

© 2021 Nabtesco Corporation. All rights reserved.

RV™-C

PRODUCT WEB SITE

RV™-C

PRODUCT VIDEO

A hollow shaft construction that delivers the same high precision, rigidity, torque and load capacity as the Precision Reduction Gear RV™ series

This hollow shaft type of Precision Reduction Gear RV™ offers better handling thanks to its improved piping and cable layout while maintaining its original compactness and light weight.
It also provides superior torsional and moment rigidity.

FEATURES

Hollow shaft construction

Backlash ≤ 1 arc.min.

Lost motion ≤ 1 arc.min.

Internal main bearing

RV™-C SPECIFICATION

Model RV-	10C	27C	50C	100C	120C	155C	200C	320C	400CS	500C	700CS	900C	1200C
Standard ratio*1	27	36.57*2	32.54*2	36.75	36.75	33.62*2	34.86*2	35.61*2	33.14*2	37.34*2	33.14*2	42.83*2	42.83*2
Rated torque (Nm)	98	265	490	980	1,176	1,470	1,960	3,136	3,920	4,900	6,860	8,820	11,760
Allowable acceleration/ deceleration torque (Nm)	245	662	1,225	2,450	2,940	3,675	4,900	7,840	9,800	12,250	17,150	22,050	29,400
Momentary max. allowable torque (Nm)	490	1,323	2,450*3	4,900*3	5,880	7,350	9,800*3	15,680	19,600	24,500	34,300	44,100	58,800
Rated output speed (rpm)	15	15	15	15	15	15	15	15	15	15	15	15	15
Allowable output speed: Duty ratio 100% (reference value) (rpm)	80	60	50	40	38.5	30	30	25	15	20	14.5	10	9
Rated service life (h)	6,000	6,000	6,000	6,000	6,000	6,000	6,000	6,000	6,000	6,000	6,000	6,000	6,000
Backlash/Lost motion (arc.min.)	1/1	1/1	1/1	1/1	1/1	1/1	1/1	1/1	1/1	1/1	1/1	1/1	1/1
Torsional rigidity (reference value) (Nm/arc.min.)	47	147	255	510	588	735	980	1,960	2,940	3,430	4,375	4,900	5,880
Allowable moment (Nm)	686	980	1,764	2,450	3,920	7,056	8,820	20,580	24,500	34,300	29,400	44,100	44,100
Allowable thrust load (N)	5,880	8,820	11,760	13,720	15,680	17,640	19,600	29,400	34,330	39,200	37,000	51,000	51,000

*1 The speed ratio does not include the input gear (option).
*2 These speed ratios are indivisible figures.
*3 The value is for the bolt clamping output shaft type.

RV™-C

RV™-C DIMENSIONS

Model RV-	10C	27C	50C	100C	120C	155C	200C	320C	400CS	500C	700CS	900C	1200C
A (Ømm)	147	182	222.5	250.5	250.5	293	347	440h7	485	520	485	543	570
B (Ømm)	110h7	140h7	176h7	199h7	199h7	234h7	260h7	340h7	347h7	390h7	386h7	390h7	390h7
C (mm)	49.5	57.5	68	72.6	72.6	89	102	101	124.4	130.5	124.4	144	162
D (Ømm)	31	43	57	71	71	80	90	138	150	138	150	130	130
E (mm)	26.35±0.6	31.35±0.65	34.35±0.65	39.35±0.65	39.35±0.65	47±1.2	56.2±0.85	71.75±0.9	66.6±1.15	81.7MAX	66.6±1.15	126.5±0.9	131.5±0.9
Weight (kg)	4.6	8.5	14.6	19.5	19.5	37	55.6	79.5	135	154	140	225	235

RV™-C

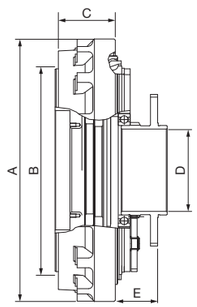

© 2021 Nabtesco Corporation. All rights reserved.

RV™-CA

An addition to the RV™-C lineup that does not require a center gear

The CA series' slim structure has been optimized for the rotary axes of robots, helping to reduce equipment widths for greater space savings.

FEATURES

Hollow shaft construction

Backlash ≤ 1 arc.min.

Lost motion ≤ 1 arc.min.

Internal main bearing

RV™-CA SPECIFICATION

Model RV-	260CA	320CA	500CA
Standard ratio	138.75 148 158.57* 170.76*	184.61* 193.84* 210 229.09* 250.90*	221.53*
Rated torque (Nm)	2,548	3,136	5,000
Allowable acceleration/ deceleration torque (Nm)	6,370	7,840	12,500
Momentary max. allowable torque (Nm)	12,740	15,680	25,000
Rated output speed (rpm)	15	15	15
Allowable output speed: Duty ratio 100% (reference value) (rpm)	21	25	10
Rated service life (h)	6,000	6,000	6,000
Backlash/Lost motion (arc.min.)	1/1	1/1	1/1
Torsional rigidity (reference value) (Nm/arc.min.)	1,540	1,960	3,380
Allowable moment (Nm)	12,740	20,580	30,000
Allowable thrust load (N)	24,500	29,400	37,750

* These speed ratios are indivisible figures.

RV™-CA

RV™-CA DIMENSIONS

Model RV-	260CA	320CA	500CA
A (Ømm)	390h7	450	486
B (Ømm)	315h7	360h7	386h7
C (mm)	148.5	148.5	179
D (Ømm)	130MIN	132MIN	140MIN
Weight (kg)	68.6	92.1	130

RV™-CA

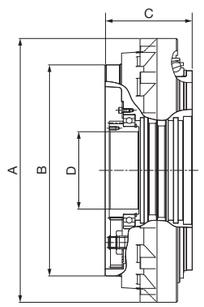

© 2021 Nabtesco Corporation. All rights reserved.

RF-P

PRODUCT VIDEO

Higher speeds plus all the features of the Precision Reduction Gear RV™ lineup

This series delivers output speeds of up to 250 rpm.
Its cycloid design also utilizes a two-stage gear reduction principle, helping to minimize both wear and backlash. These features enable highly precise positioning.

FEATURES

- High speed (Max. 250 rpm)
- High accuracy (backlash ≤ 2 arc.min.)
- Good accel. performance (up to 3 x rated torque)
- Adapted for use with food-grade oil
- Long service life (20,000 h)

RF-P SPECIFICATION

Model RF-	10P	19P	35P
Standard ratio	35.73* 41 42.17* 51	19 26.2 31	20.55*
Rated torque (Nm)	100	190	350
Allowable acceleration/ deceleration torque (Nm)	300	570	1,050
Momentary max. allowable torque (Nm)	500	570	1,050
Rated output speed (rpm)	50	50	50
Allowable output speed: Duty ratio 50% (reference value) (rpm)	250	200	140
Rated service life (h)	20,000	20,000	20,000
Backlash/Lost motion (arc.min.)	2/2	2/2	2/2
Torsional rigidity (reference value) (Nm/arc.min.)	42	66	149
Allowable moment (Nm)	460	960	1,100
Allowable thrust load (N)	2,200	3,000	4,000

* These speed ratios are indivisible figures.

RF-P DIMENSIONS

Model RF-	10P	19P	35P
A (Ømm)	127	148	183
B (Ømm)	94h7	110h7	140h7
C (mm)	64.5	71	80
D (Ømm)	126.5h7	127h7	160h7
Weight (kg)	3.9	5.6	11

Parallel Link

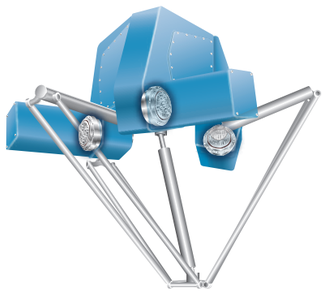

RF-P

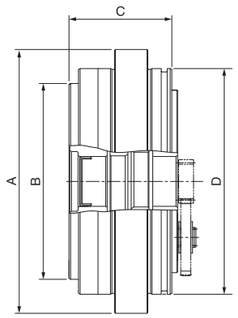

© 2021 Nabtesco Corporation. All rights reserved.

RV™-Z/ZC NEW

Even greater rigidity with the same dimensions as the Precision Reduction Gear RV™ series

The shape of each part has been carefully optimized using both our proven technical expertise and CAE.
This superior design allows units to be mounted on robots that perform welding or processing with large counterforces and also helps to reduce the cycle times of robots.

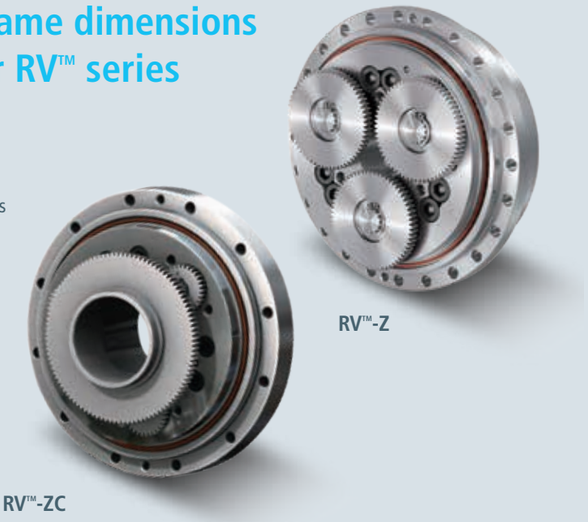

FEATURES

- Improved torsional rigidity
- Improved moment rigidity
- Backlash ≤ 1 arc.min.
- Lost motion ≤ 1 arc.min.

10 to 20% greater rigidity!

Improves damping when positioning robots, reduces deflection caused by high reaction forces

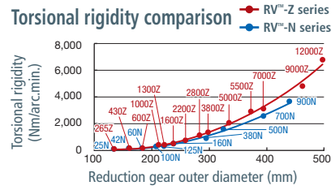

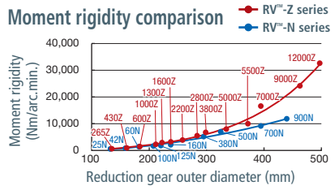

RV™-Z SPECIFICATION

Model RV-	265Z	430Z	600Z (under development)	1000Z	1300Z	1600Z	2200Z
Shape	Reverse assembly	Reverse assembly	Reverse assembly	Reverse assembly	Reverse assembly	Reverse assembly	Reverse assembly
Rated torque (Nm)	265	430	600	1,000	1,300	1,600	2,200
Allowable moment (Nm)	800	1,700	2,000	2,700	3,500	4,000	5,500
A (Ømm)	135	161	184	212	223	238	259
B (mm)	61	63	69.5	78.5	81	100.9	111
Weight (kg)	3.8	5.9	8.7	12.7	15.5	20.5	28

Model RV-	2800Z	3800Z	5000Z	5500Z	7000Z	9000Z	12000Z (under development)
Shape	Reverse assembly	Reverse assembly	Standard assembly	Standard assembly	Reverse assembly	Reverse assembly	Reverse assembly
Rated torque (Nm)	2,800	3,800	5,000	5,500	7,000	9,000	12,000
Allowable moment (Nm)	6,000	7,200	11,000	13,000	15,000	20,000	40,000
A (Ømm)	284	299	335	373	395	453	498
B (mm)	115	128	131.5	148.7	163	170	211
Weight (kg)	36	42.3	55.1	79.1	102.5	141	213

Note 1: The specifications of the models under development are subject to change.
Note 2: Each model will be provided in both standard and reverse configurations in the future. The dimensions table currently displays finalized models (development completed) and those with combined configurations.

RV™-Z

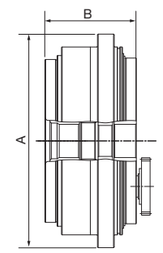

Reverse assembly

RV™-ZC SPECIFICATION

Model RV-	350ZC (under development)	600ZC	1200ZC (under development)	1500ZC (under development)	2000ZC (under development)	2600ZC (under development)	3200ZC	5000ZC	9000ZC (under development)
Shape	C	C	C	C	C	-	CT	CT	C
Rated torque (Nm)	350	600	1,200	1,500	2,000	2,600	3,200	5,000	9,000
Allowable moment (Nm)	1,600	3,000	4,000	7,200	9,000	14,000	25,000	35,000	45,000
A (Ømm)	-	224	-	-	335	-	440	485	543
B (mm)	-	79	-	-	108.5	-	142.5	168.5	189
Weight (kg)	-	13.4	-	-	43.2	-	88.4	130	208

Note 1: The specifications of the models under development are subject to change.
Note 2: Model 2600ZC or above will be provided in both C and CT configurations in the future. The dimensions table currently displays finalized models (development completed) and those with combined configurations.

RV™-ZC

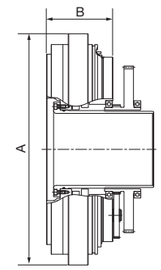

C type

For more information, contact our sales representative.

© 2021 Nabtesco Corporation. All rights reserved.

RV™-Original

The Precision Reduction Gear RV™ series' original bearingless model

FEATURES

No support bearing

Backlash ≤ 1 arc.min.

High shock load resistance (withstands 5 x rated torque)

Good accel. performance (up to 2.5 x rated torque)

RV™-Original SPECIFICATION

Model RV-	15	30	60	160	320	450	550	900
Standard ratio	57 81 105 121 141	57 81 105 121 153	57 81 101 121 153	81 101 129 145 171	81 101 118.5 129 141 171 185	81 101 118.5 129 154.84* 171 192.42*	123 141 163.5 192.42*	31.42*
Rated torque (Nm)	137	333	637	1,568	3,136	4,410	5,390	8,820
Allowable acceleration/ deceleration torque (Nm)	274	833	1,592	3,920	7,840	11,025	13,475	22,050
Momentary max. allowable torque (Nm)	686	1,666	3,185	6,615	12,250	18,620	26,950	44,100
Rated output speed (rpm)	15	15	15	15	15	15	15	15
Allowable output speed: Duty ratio 100% (reference value) (rpm)	60	50	40	45	35	25	20	7.5
Rated service life (h)	6,000	6,000	6,000	6,000	6,000	6,000	6,000	6,000
Backlash/Lost motion (arc.min.)	1/1	1/1	1/1	1/1	1/1	1/1	1/1	1/1
Torsional rigidity (reference value) (Nm/arc.min.)	39.2	98	196	392	980	1,176	1,666	5,923

* These speed ratios are indivisible figures.

Stacker

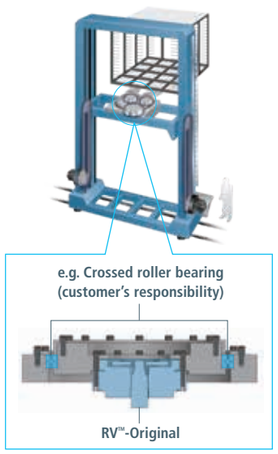

RV™-Original DIMENSIONS

Model RV-	15	30	60	160	320	450	550	900
A (Ømm)	$129.9^{0}_{-0.05}$	159.5±0.2	199.5	239.5	289.5	324.5	369.5	550
B (Ømm)	105h6	135h6	160h6	204h6	245	275	316h7	440h7
C (mm)	65	71.5	71.5	96	117.6	128.5	147	185
D (Ømm)	130h7	160h7	200h7	$239.9^{0}_{-0.05}$	290h7	325h7	370h7	550h7
Weight (kg)	3.6	6.2	9.7	19.5	34	47	72	223

RV™-Original

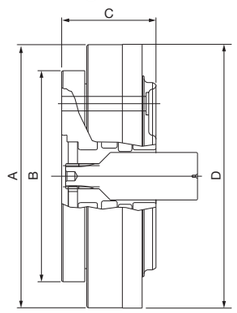

© 2021 Nabtesco Corporation. All rights reserved.

RV™-E

PRODUCT WEB SITE

RV™-E

A top seller for many years, featuring an integrated main bearing

FEATURES

Backlash ≤ 1 arc.min.

Lost motion ≤ 1 arc.min.

Internal main bearing

RV™-E SPECIFICATION

Model RV-	6E	20E	40E	80E	160E	320E	450E	1500E
Standard ratio	31 43 53.5 59 79 103	57 81 105 121 141 161	57 81 105 121 153	57 81 101 121 153*2	81 101 129 145 171	81 101 118.5 129 141 171 185	81 101 118.5 129 154.84*1 171 192.42*1	65 156 164.47*1 236.29*1
Rated torque (Nm)	58	167	412	784	1,568	3,136	4,410	14,700
Allowable acceleration/ deceleration torque (Nm)	117	412	1,029	1,960	3,920	7,840	11,025	36,750
Momentary max. allowable torque (Nm)	294	833	2,058	3,920*3	7,840*3	15,680*3	22,050*3	73,500
Rated output speed (rpm)	30	15	15	15	15	15	15	15
Allowable output speed: Duty ratio 100% (reference value) (rpm)	100	75	70	70	45	35	25	10
Rated service life (h)	6,000	6,000	6,000	6,000	6,000	6,000	6,000	9,000
Backlash/Lost motion (arc.min.)	1.5/1.5	1/1	1/1	1/1	1/1	1/1	1/1	1/1
Torsional rigidity (reference value) (Nm/arc.min.)	20	49	108	196	392	980	1,176	6,320
Allowable moment (Nm)	196	882	1,666	2,156*3	3,920	7,056*3	8,820	44,100
Allowable thrust load (N)	1,470	3,920	5,194	7,840	14,700	19,600	24,500	51,000

*1 These speed ratios are indivisible figures.
*2 The speed ratio of 153 is applicable to only the bolt clamping output-shaft type.
*3 The value is for the bolt clamping output shaft type.

6-axis robot

RV™-E DIMENSIONS

Model RV-	6E	20E	40E	80E	160E	320E	450E	1500E
A (Ømm)	122	145	190	222	280h7	325h7	370h7	570
B (Ømm)	86h7	105h6	135h7	160h7	204h7	245h7	275h7	390h7
C (mm)	53	65	76	84	104	125	140	220
D (Ømm)	103h7	123h7	160h7	190h7	280h7	325h7	370h7	494h7
Weight (kg)	2.5	4.7	9.3	13.1	26.4	44.3	66.4	298

RV™-E

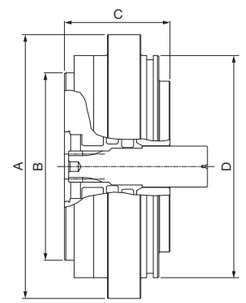

© 2021 Nabtesco Corporation. All rights reserved.

RVP®-A

PRODUCT WEB SITE

RVP®-A

PRODUCT VIDEO

2-axis positioner unit

Able to install motors from all major servomotor manufacturers, making collaborative work with many different robots possible. Installation of Precision Reduction Gear RV™ helps to reduce cycle times and allows the use of small motors.

FEATURES

- Able to choose from multiple reduction ratios
- Support for all major servomotor manufacturers
- Additional parts such as covers are available
- Completely sealed and pre-lubricated
- High-speed, high accuracy positioning
- Grounding unit for welding is available as an option

Name of each section

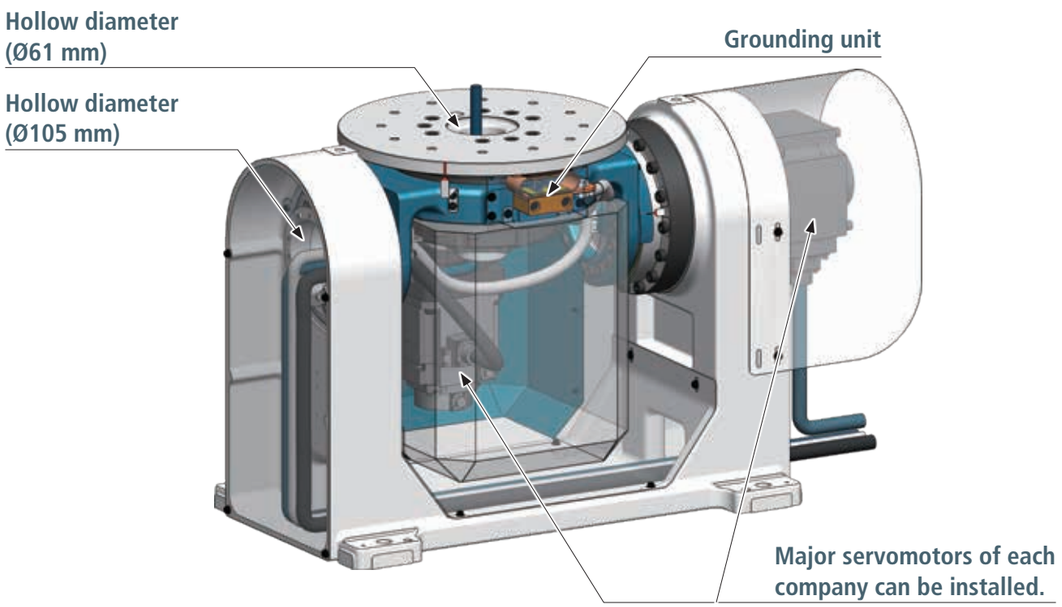

Center of Gravity Height and Allowable Load Range

Note 1: Loading beyond this range will exceed the allowable acceleration/deceleration torque and/or allowable moment of the reduction gear, and may damage the reduction gear.
Note 2: Loads given are reference values.

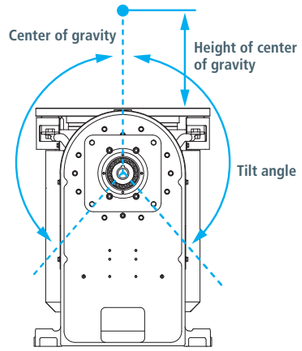

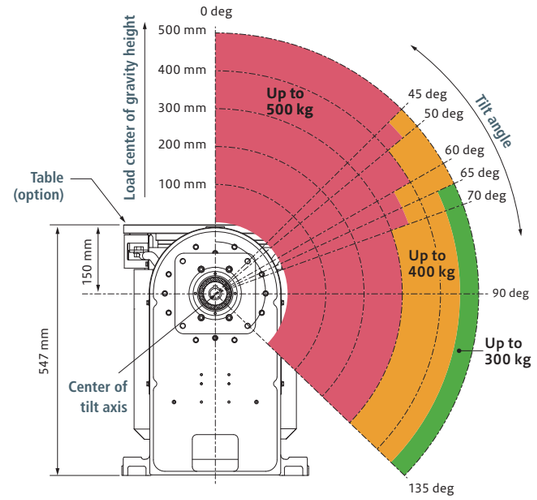

RVP®-A SPECIFICATION

Model RVP-A		05E-S	05E-F
Reduction speed ratio	Rotary axis	150	100.5
	Tilting axis	156	102.81*
Rated torque (Nm)	Rotary axis	980	
	Tilting axis	1,600	
Allowable acceleration/deceleration torque (Nm)	Rotary axis	2,450	
	Tilting axis	4,000	
Momentary max. allowable torque (Nm)	Rotary axis	4,900	
	Tilting axis	8,000	
Rated output speed (rpm)	Rotary axis	15	
	Tilting axis	15	
Allowable output speed (reference value) (rpm)	Rotary axis	20	30
	Tilting axis	19	29
Rated service life (h)		6,000	6,000
Backlash/Lost motion (arc.min.)	Rotary axis	1/1	1/1
	Tilting axis	1/1	1/1
Allowable moment (Nm)		2,450	

* These speed ratios are indivisible figures.

RVP®-A DIMENSIONS

Model RVP-A	05E-S	05E-F
A (mm)	715	715
B (mm)	408	408
C (mm)	547	547
D (mm)	150	150
E (Ømm)	100H7	100H7
Weight (kg)*	232	232

* The weight of the input spline and motor flange is not included.

RVP®-A

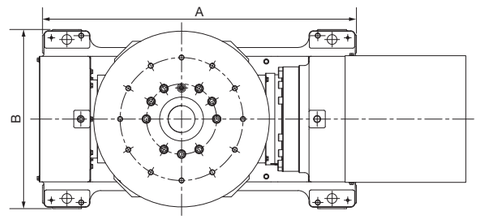

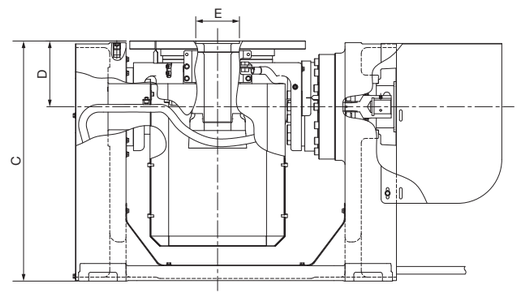

© 2021 Nabtesco Corporation. All rights reserved.
© 2021 Nabtesco Corporation. All rights reserved.

RVP®-B

PRODUCT WEB SITE

RVP®-B

PRODUCT VIDEO

BBQ positioner unit

The BBQ positioner unit includes the optimal gearhead with base flange. All major parts are included, man-hours needed for design and production can be reduced. Furthermore, the high-rigidity, shock resistant frame allows for easy transportation and handling.

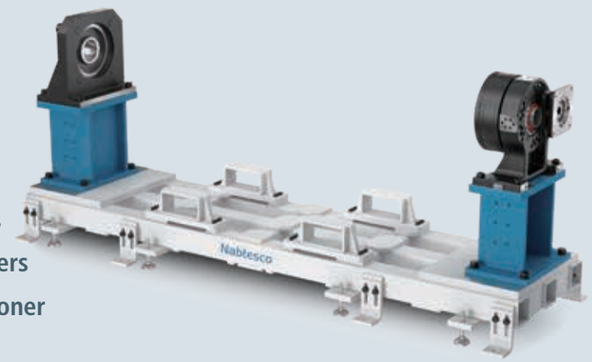

FEATURES

- Able to choose from multiple reduction ratios
- Support for all major servomotor manufacturers
- Includes all main parts needed for BBQ positioner
- Completely sealed and pre-lubricated
- High shock resistance frame

Name of each section

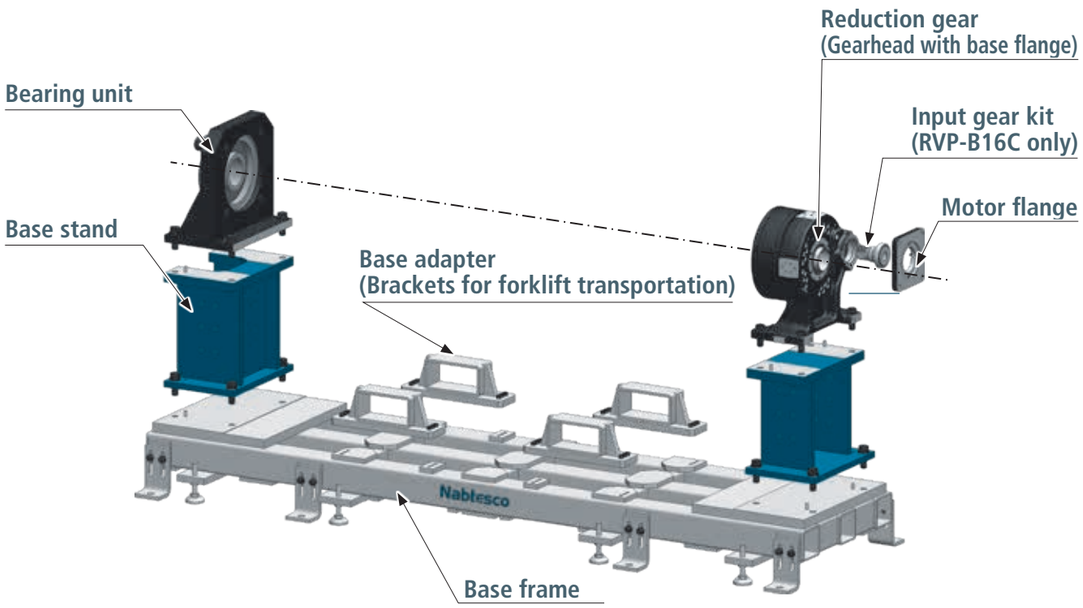

© 2021 Nabtesco Corporation. All rights reserved.

Center of Gravity Height and Allowable Load Range

Note 1: Loading beyond this range will exceed the allowable moment of the reduction gear, and may damage the reduction gear.
Note 2: Loads given are reference values.

RVP-B10C

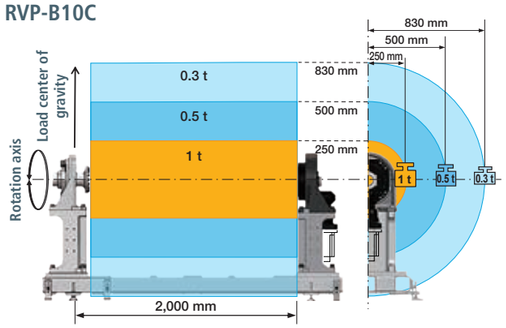

RVP-B16E

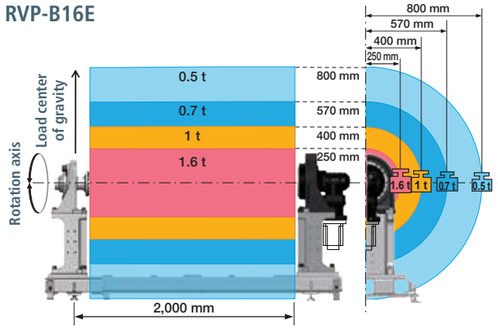

RVP-B16C

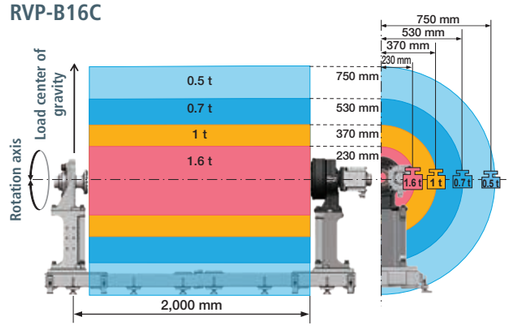

RVP®-B SPECIFICATION

Model RVP-B		10C	16E	16C
Standard ratio		100.5 150 210 258	66 81 101 121 145 171	78.3 104.4 120.46
Rated torque (Nm)		980	1,568	1,470
Allowable acceleration/deceleration torque (Nm)		2,450	3,920	3,675
Momentary max. allowable torque (Nm)		4,900	7,840	7,350
Rated output speed (rpm)		15	15	15
Allowable output speed (reference value) (rpm)		30	30	51
Rated service life (h)		6,000	6,000	6,000
Backlash/ Lost motion (arc.min.)	Input shafts other than right angle type	1/1	1/1	1/1
	Right angle input shaft	1.5 / 1.5	1.5 / 1.5	-

RVP®-B DIMENSIONS

Model RVP-B	10C	16E	16C
A (mm)	2,000/2,500*1	2,000/2,500*1	2,000/2,500*1
B (mm)	2,400/2,900	2,400/2,900	2,400/2,900
C (mm)	800/1,000*1	800/1,000*1	800/1,000*1
D (mm)	987/1,187	987/1,187	947.5/1,147.5
E (mm)	734	734	734
F (Ømm)	199h7	280h7	250h7
Weight (kg)*2	618 to 662	624 to 687	641 to 678

*1 The length between shafts and shaft height can be selected.
*2 The weight of the motor flange is not included.

RVP®-B

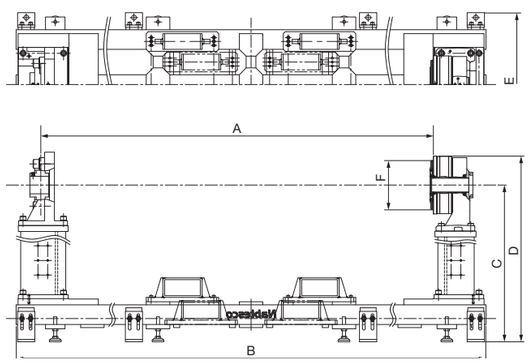

© 2021 Nabtesco Corporation. All rights reserved.

RVP®-C

PRODUCT WEB SITE

RVP®-C

PRODUCT VIDEO

Variable tilt angle turntable unit

A human centered design improves the workability, reducing the burden on workers and the time required for setting the part, and improving mixed model production.
Also, areas previously unreachable by robots can now be accessed by tilting the table and varying the height.

FEATURES

Support for all major servomotor manufacturers

A wide variety of options are available

Completely sealed and pre-lubricated

The table can be tilted

Cable Layout Example

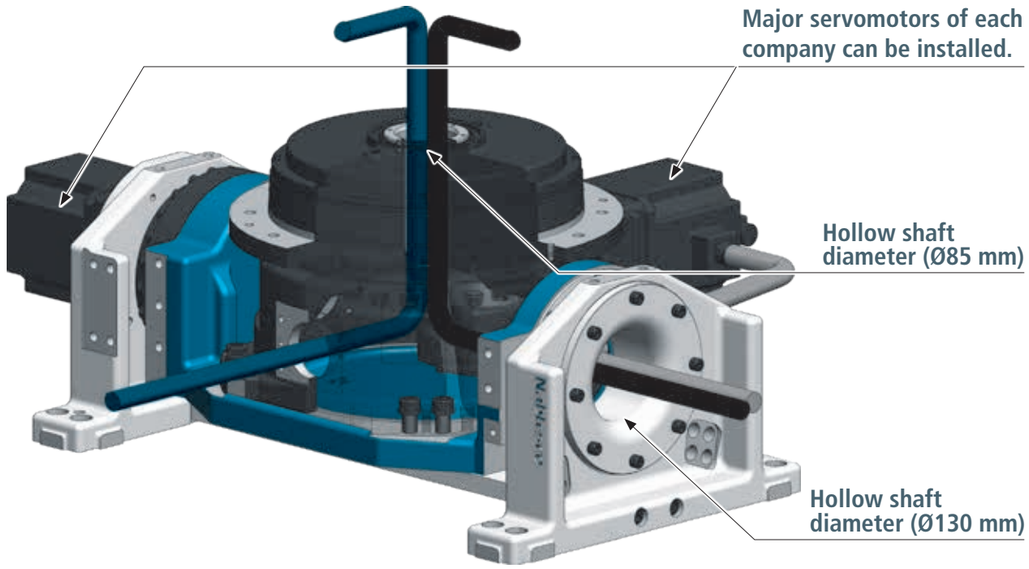

Center of Gravity Height and Allowable Load Range

Note 1: Loading beyond this range will exceed the allowable acceleration/deceleration torque and/or allowable moment of the reduction gear, and may damage the reduction gear.
Note 2: Loads given are reference values.

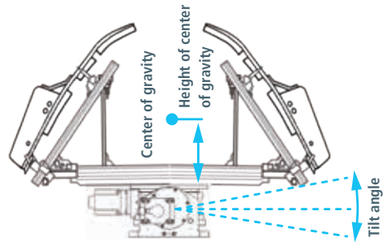

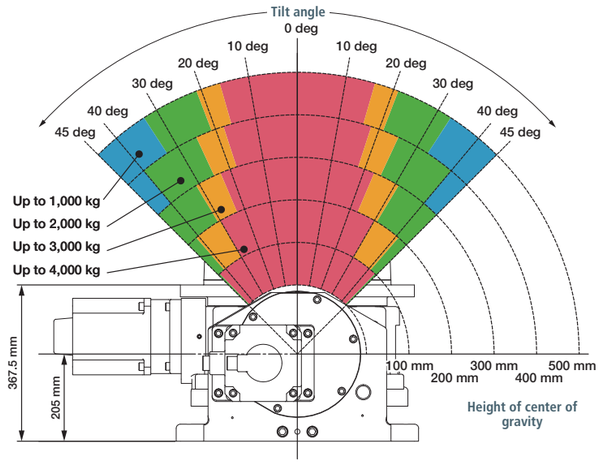

RVP®-C SPECIFICATION

Model RVP-C		40-A	40-B
Standard ratio	Rotary axis	170	170
	Tilting axis	706.5	706.5
Rated torque (Nm)	Rotary axis	3,136	3,136
	Tilting axis	3,724	3,724
Allowable acceleration/deceleration torque (Nm)	Rotary axis	7,840	7,840
	Tilting axis	9,310	9,310
Momentary max. allowable torque (Nm)	Rotary axis	15,680	15,680
	Tilting axis	18,620	18,620
Rated output speed (rpm)	Rotary axis	15	15
	Tilting axis	15	15
Allowable output speed (reference value) (rpm)	Rotary axis	17.6	17.6
	Tilting axis	4.2	4.2
Rated service life (h)		6,000	6,000
Backlash/Lost motion (arc.min.)	Rotary axis	1/1	1/1
	Tilting axis	1/1	1/1
Allowable moment (Nm)		9,310	9,310

RVP®-C DIMENSIONS

Model RVP-C	40-A	40-B
A (mm)	964	964
B (mm)	580	580
C (mm)	467.5	367.5
D (mm)	205	205
E (Ømm)	300h7	440h7
Weight (kg)*	221	221

* The weight of the input spline and motor flange is not included.

RVP-C40-A

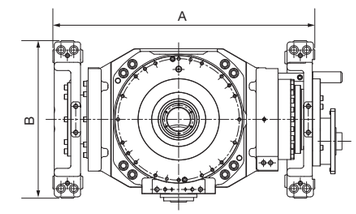

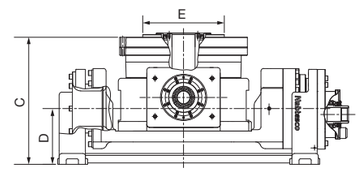

RVP-C40-B

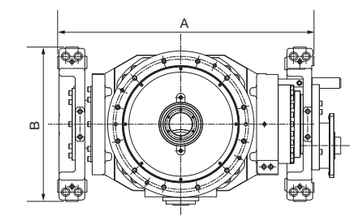

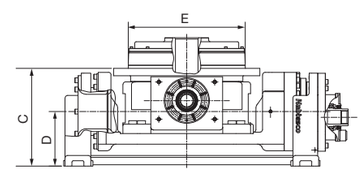

© 2021 Nabtesco Corporation. All rights reserved.
© 2021 Nabtesco Corporation. All rights reserved.

RD2 Solid Series
RD_-E

PRODUCT WEB SITE

RDS-E RDR-E RDP-E

Gearhead model available in three input types

Featuring mounting parts compatible with all major servomotors and sealed with grease before shipping, this model's time-saving design makes it easier to use than ever.
Each type is highly user-friendly and provides outstanding performance.

FEATURES

Completely sealed and pre-lubricated

Backlash ≤ 1 arc.min.

Lost motion ≤ 1 arc.min.

Internal main bearing

Major servomotor fastener components included

BENEFITS

Usable in a wide range of applications

Extensive lineup featuring 75 items

3 input options

Straight	Right angle	Pulley

RDS type

RDR type

RDP type

© 2021 Nabtesco Corporation. All rights reserved.

RD_-E SPECIFICATION

Model RDS- / RDR-		6E	20E	40E	80E	160E	320E
Standard ratio		31, 43, 53.5 79, 103	41, 57, 81 105, 121, 161	41, 57, 81 105, 121, 153	41, 57, 81 101, 121, 153	66, 81, 101 121, 145, 171	66, 81, 101 121, 141, 185
Rated torque (Nm)	RDS-E	58	167	412	784	1,568	3,136
	RDR-E	58	108 i:41 151 i:57 167 i:81,105,121,161	400 i:41 412 i:57,81,105,121,153	400 i:41 556 i:57 784 i:81,101,121,153	1,568	1,800 i:66, 2,209 i:81 2,755 i:101 3,136 i:121,141,185
Allowable acceleration/ deceleration torque (Nm)	RDS-E	117	412	1,029	1,960	3,920	7,840
	RDR-E	117	271 i:41 378 i:57 412 i:81,105,121,161	1,000 i:41 1,029 i:57,81,105,121,153	1,000 i:41 1,390 i:556 1,960 i:81,101,121,153	3,920	4,503 i:66, 5,527 i:81 6,892 i:101 7,840 i:121,141,185
Momentary max. allowable torque (Nm)	RDS-E	294	833	2,058	3,920	7,840	15,680
	RDR-E	294	543 i:41 755 i:57 833 i:81,105,121,161	2,000 i:41 2,058 i:57,81,105,121,153	2,000 i:41 2,781 i:556 3,920 i:81,101,121,153	7,840	9,002 i:66, 11,048 i:81 13,776 i:101 15,680 i:121,141,185
Rated output speed (rpm)		30	15	15	15	15	15
Allowable input speed (rpm)		3,500	3,500	3,000	3,000	2,000	2,000
Rated service life (h)		6,000	6,000	6,000	6,000	6,000	6,000
Backlash/ Lost motion (arc.min.)	RDS-E	1.5/1.5	1/1	1/1	1/1	1/1	1/1
	RDR-E	2/2	1.5/1.5	1.5/1.5	1.5/1.5	1.5/1.5	1.5/1.5
Torsional rigidity (reference value) (Nm/arc.min.)		20	49	108	196	392	980
Allowable moment (Nm)		196	882	1,666	2,156	3,920	7,056
Allowable thrust load (N)		1,470	3,920	5,194	7,840	14,700	19,600

Model RDP-	6E	20E	40E	80E	160E	320E
Standard ratio	-	81	57	81	66	81
Rated torque (Nm)	-	167	412	784	1,568	3,136
Allowable acceleration/ deceleration torque (Nm)	-	412	1,029	1,960	3,920	7,840
Momentary max. allowable torque (Nm)	-	833	2,058	3,920	7,840	15,680
Rated output speed (rpm)	-	15	15	15	15	15
Allowable input speed (rpm)	-	3,500	3,000	3,000	2,000	2,000
Rated service life (h)	-	6,000	6,000	6,000	6,000	6,000
Backlash/Lost motion (arc.min.)	-	1/1	1/1	1/1	1/1	1/1
Torsional rigidity (reference value) (Nm/arc.min.)	-	49	108	196	392	980
Allowable moment (Nm)	-	882	1,666	2,156	3,920	7,056
Allowable thrust load (N)	-	3,920	5,194	7,840	14,700	19,600

RD_-E DIMENSIONS

Model RD_-		6E	20E	40E	80E	160E	320E
A (Ømm)		125.5	150	192	222	280	325
B (Ømm)		86h7	105h6	135h7	160h7	204h7	245h7
C (mm)	RDS-E	118.9/129.9	124.5/135.5	158.6/182.6	173/197	216.5/213.5	241/238
	RDR-E	178.4	184	229.1	243.5	352.5	377
	RDP-E	-	152	194.6	209	257	281.5
D (mm)	RDR-E	170.55/182.55	182.8/194.8	243.5/267.5	259/283	362.5/353.5	385/376
Weight (kg)	RDS-E	5.7/6.8	8.4/9.5	17.5/20	23.8/26.3	43.4/46.3	68.9/71.8
	RDR-E	7.2/8.2	9.9/10.9	20.5/23.2	26.8/29.6	65.6/68.1	91.2/93.7
	RDP-E	-	8.3	16.4	22.8	41.9	67.3

RDS-E

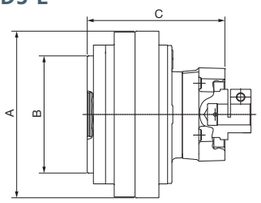

RDR-E

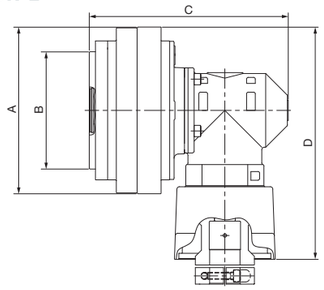

RDP-E

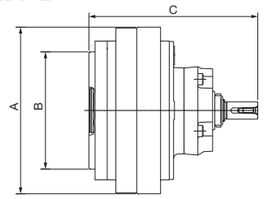

© 2021 Nabtesco Corporation. All rights reserved.

RD2 Hollow Shaft Series
RD_-C

PRODUCT WEB SITE

RDS-C RDR-C RDP-C

Gearhead model available in three input types

Featuring mounting parts compatible with all major servomotors and sealed with grease before shipping, this model's time-saving design makes it easier to use than ever.
Each type is highly user-friendly and provides outstanding performance.

FEATURES

Completely sealed and pre-lubricated

Backlash ≤ 1 arc.min.

Lost motion ≤ 1 arc.min.

Internal main bearing

Major servomotor fastener components included

BENEFITS

Usable in a wide range of applications

Extensive lineup featuring 56 items

3 input options

Straight	Right angle	Pulley

RDS type

RDR type

RDP type

© 2021 Nabtesco Corporation. All rights reserved.

RD_-C SPECIFICATION

Model RDS- / RDR-		10C	27C	50C	100C	200C	320C
Standard ratio		81 108 153 189 243	99.82 141.68 184 233.45	109 152.6 196.2 239.8	100.5 150 210 258	105.83 155.96 206.09 245.08	115 157 207 253 356.5
Rated torque (Nm)		98	265	490	980	1,960	3,136
Allowable acceleration/ deceleration torque (Nm)		245	662	1,225	2,450	4,900	7,840
Momentary max. allowable torque (Nm)		490	1,323	2,450	4,900	9,800	15,680
Rated output speed (rpm)		15	15	15	15	15	15
Allowable input speed (rpm)		3,500	3,500	3,000	3,000	2,000	2,000
Rated service life (h)		6,000	6,000	6,000	6,000	6,000	6,000
Backlash/ Lost motion (arc.min.)	RDS-C	1/1	1/1	1/1	1/1	1/1	1/1
	RDR-C	1.5/1.5	1.5/1.5	1.5/1.5	1.5/1.5	1.5/1.5	1.5/1.5
Torsional rigidity (reference value) (Nm/arc.min.)		47	147	255	510	980	1,960
Allowable moment (Nm)		686	980	1,764	2,450	8,820	20,580
Allowable thrust load (N)		5,880	8,820	11,760	13,720	19,600	29,400

Model RDP-	10C	27C	50C	100C	200C	320C
Standard ratio	108	99.82	109	100.5	105.83	157
Rated torque (Nm)	98	265	490	980	1,960	3,136
Allowable acceleration/ deceleration torque (Nm)	245	662	1,225	2,450	4,900	7,840
Momentary max. allowable torque (Nm)	490	1,323	2,450	4,900	9,800	15,680
Rated output speed (rpm)	15	15	15	15	15	15
Allowable input speed (rpm)	3,500	3,500	3,000	3,000	2,000	2,000
Rated service life (h)	6,000	6,000	6,000	6,000	6,000	6,000
Backlash/Lost motion (arc.min.)	1/1	1/1	1/1	1/1	1/1	1/1
Torsional rigidity (reference value) (Nm/arc.min.)	47	147	255	510	980	1,960
Allowable moment (Nm)	686	980	1,764	2,450	8,820	20,580
Allowable thrust load (N)	5,880	8,820	11,760	13,720	19,600	29,400

RD_-C DIMENSIONS

Model RD_-		10C	27C	50C	100C	200C	320C
A (Ømm)		110h7	140h7	176h7	199h7	260h7	340h7
B (Ømm)		25	36	48	61	75	120
C (mm)	RDS-C	132/143	141/152	177.5/201.5	182.1/206.1	246/243	256.5/253.5
	RDR-C	191.5	200.5	248	252.6	382	392.5
	RDP-C	159.5	168.5	213.5	218.1	286.5	297
D (mm)	RDS-C	187.2/197.7	227.2/237.7	270/278.5	302/310.5	403/413	478.5/488.5
	RDR-C	254.5/266.5	294.5/306.5	363.5/387.5	395.5/419.5	550.5/541.5	626/617
	RDP-C	187.2	227.2	268	300	402.7	478.5
E (mm)		172.4	207.4	252	280	368	447
Weight (kg)	RDS-C	10.4/11.5	16.5/17.6	29.9/32.3	37.9/40.4	95.5/98.4	141.4/144.3
	RDR-C	11.9/13.0	18.0/19.0	32.9/35.6	40.9/43.7	117.9/120.4	163.6/166.1
	RDP-C	10.3	16.4	28.8	36.9	93.8	139.7

Note: For the outer diameter and weight of the model with a 356.5 standard ratio, contact our service representative.

RDS-C

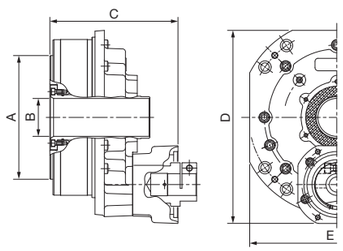

RDR-C

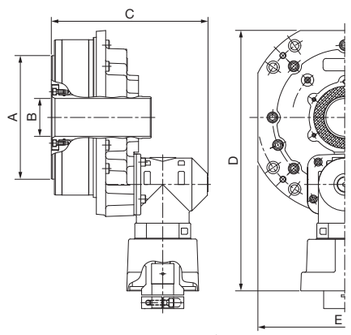

RDP-C

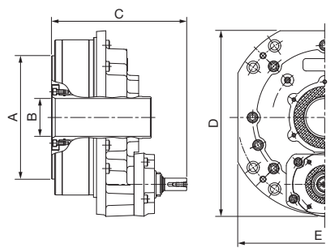

© 2021 Nabtesco Corporation. All rights reserved.

RD2 Foot Type

Optional Base Flange for RD2

A base flange that can be utilized with all RD2 series models is provided as an option. The flange significantly reduces the times required for equipment design, manufacturing and assembly.

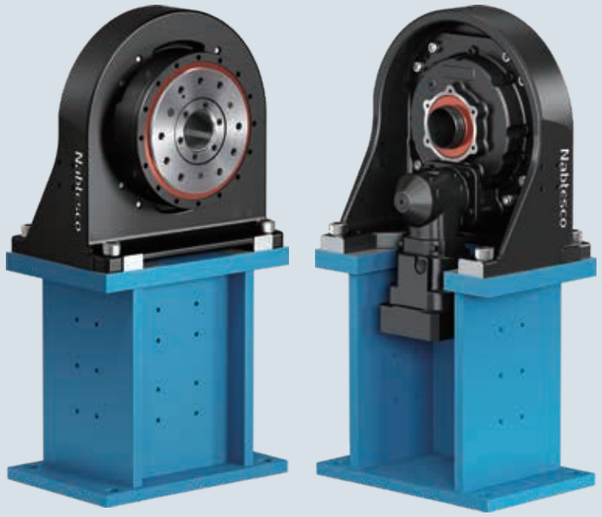

FEATURES

Easier mounting of any RD2 model on equipment without altering its specifications thanks to the foot type structure
Compatible with many servomotors

Straight input type | **Right angle input type** | **Pulley input type**

RDS-E RDS-C RDR-E RDR-C RDP-E RDP-C

Base flange

Shipped as RD2 with base flange assembled
e.g. RDR-100C

© 2021 Nabtesco Corporation. All rights reserved.

Positioner

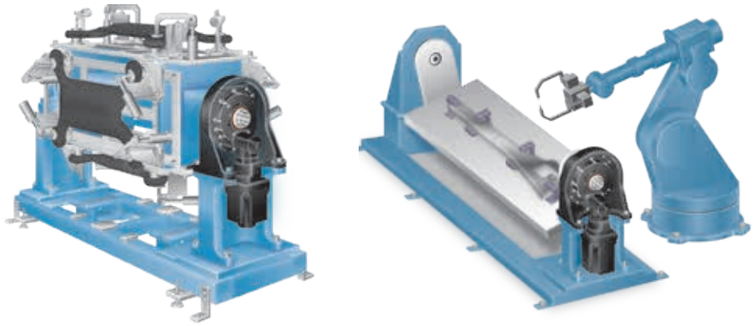

RD_-E Foot Type DIMENSIONS

Model RD_-		6E	20E	40E	80E	160E	320E
A (mm)		201.5	201.5	354	354	394	474.5
B (mm)		240	240	250	250	253	380
C (mm)	RDS-E	129.9	135.5	182.6	197	216.5	241
	RDR-E	178.4	184	229.1	243.5	352.5	377
	RDP-E	-	152	194.6	209	257	281.5
D (mm)		265	265	335	335	380	425
E (mm)		100	100	210	210	207	265
F (Ømm)		86h7	105h6	135h7	160h7	204h7	245h7
G (mm)	RDR-E	119.8	119.8	171.5	171.5	222.5	222.5
H (pcs)		4	4	4	4	4	4
I (Ømm)		17.5	17.5	17.5	17.5	22	22
J (pcs)		2	2	2	2	2	2
K (Ømm)		10	10	10	10	10	10
L (Ømm)		-	-	-	-	-	-
Weight (kg)		19	22	52	52	99	171

RD_-C Foot Type DIMENSIONS

Model RD_-		10C	27C	50C	100C	200C	320C
A (mm)		354	354	394	394	557	634.5
B (mm)		250	250	253	253	390	405
C (mm)	RDS-C	143	152	201.5	206.1	246	256.5
	RDR-C	191.5	200.5	248	252.6	382	392.5
	RDP-C	159.5	168.5	213.5	218.1	286.5	297
D (mm)		335	335	380	380	550	645
E (mm)		210	210	207	207	295	315
F (Ømm)		110h7	140h7	176h7	199h7	260h7	340h7
G (mm)	RDR-C	180.3	202.8	261.5	279.5	366.5	402.5
H (pcs)		4	4	4	4	8	8
I (Ømm)		17.5	17.5	22	22	22	22
J (pcs)		2	2	2	2	2	2
K (Ømm)		10	10	10	10	10	10
L (Ømm)		25	36	48	61	75	120
Weight (kg)		37	41	70	74	240	343

RDS (Straight input type)

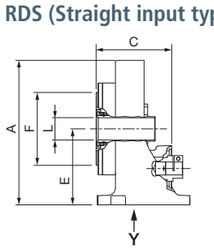

RDR (Right angle input type)

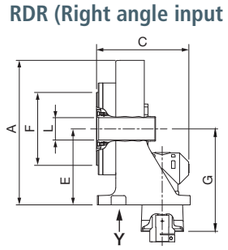

RDP (Pulley input type)

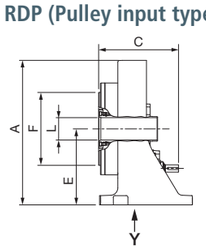

View from Y

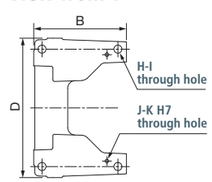

© 2021 Nabtesco Corporation. All rights reserved.

RS-A/B

PRODUCT WEB SITE

RS

PRODUCT VIDEO

Low Profile, Infinitely Programmable Turntable

FEATURES

Table type

Right angle input

Lineup capable of handling loads of up to 9 tons

Backlash ≤ 1 arc.min. (1.5 arc.min. for RS-50A/50B)

Lost motion ≤ 1 arc.min. (1.5 arc.min. for RS-50A/50B)

Internal main bearing

Major servomotor fastener components included

Completely sealed and pre-lubricated

BENEFITS

Easy to install (bolt tightening & locating pins only)

Lower table height (low-profile body)

Lineup

50A — 1.5 t

50B — 1.5 t

260A — 2.5 t

260B — 2.5 t

320A — 5 t

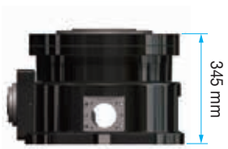

320B — 5 t

400A — 7 t

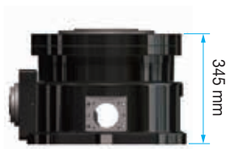

900A — 9 t

© 2021 Nabtesco Corporation. All rights reserved.

Welding equipment

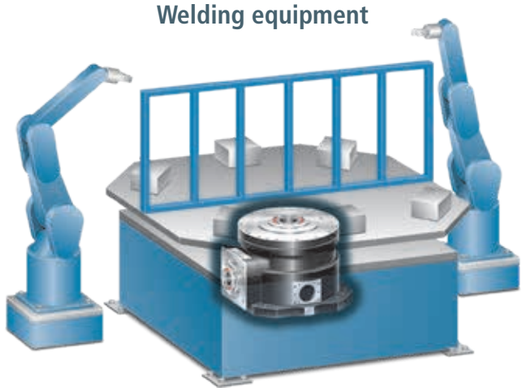

Indexer

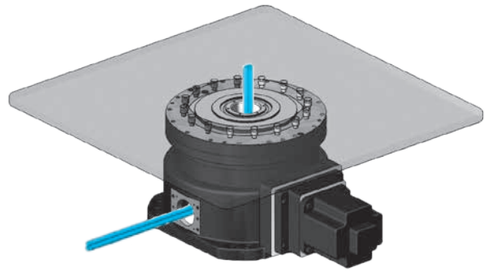

RS-A/B SPECIFICATION

Model RS-	50A	50B	260A	260B	320A	320B	400A	900A
Standard ratio	65.4 130.8 163.5	65.4 130.8 163.5	120	120	170	170	170	193.6 240
Rated torque (Nm)	490	490	2,548	2,548	3,136	3,136	3,920	8,820
Allowable acceleration/ deceleration torque (Nm)	1,225	1,225	6,370	6,370	7,840	7,840	9,800	17,640
Momentary max. allowable torque (Nm)	2,450	2,450	12,740	12,740	15,680	15,680	19,600	35,280
Rated output speed (rpm)	15	15	15	15	15	15	15	15
Allowable output speed: Duty ratio 100% (reference value) (rpm)	60	60	21.5	21.5	20	20	20	10
Rated service life (h)	6,000	6,000	6,000	6,000	6,000	6,000	6,000	6,000
Backlash/Lost motion (arc.min.)	1.5/1.5	1.5/1.5	1/1	1/1	1/1	1/1	1/1	1/1
Torsional rigidity (reference value) (Nm/arc.min.)	255	255	1,540	1,540	1,570	1,570	2,450	4,900
Allowable moment (Nm)	1,764	1,764	12,740	12,740	20,580	20,580	24,500	44,100
Allowable thrust load (N)	14,700	14,700	24,500	24,500	49,000	49,000	72,000	88,200
Repeated positioning accuracy (ref. value)	±5 arc.sec.	±5 arc.sec.	±5 arc.sec.	±5 arc.sec.	±5 arc.sec.	±5 arc.sec.	±5 arc.sec.	ASK
500 mm radius	±0.012 mm	±0.012 mm	±0.012 mm	±0.012 mm	±0.012 mm	±0.012 mm	±0.012 mm	ASK

RS-A/B DIMENSIONS

Model RS-	50A	50B	260A	260B	320A	320B	400A	900A
A (Ømm)	200	176	390	390	470	550	470	543
B (Ømm)	95H7	93H7	290h7	290h7	300h7	440h7	300h7	390h7
C (Ømm)	50	50	110	110	85	85	85	95
D (mm)	158	136	335	233.5	345	245	345	400
E (mm)	258	258	543	430	480	480	480	583
Weight (kg)	45	40	165	129	290	290	290	480

50A/50B

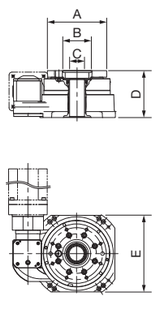

260A/260B

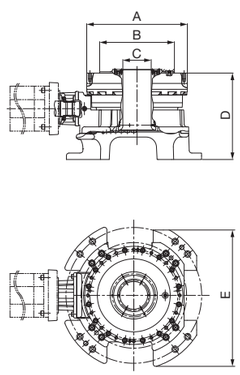

320A/320B/400A

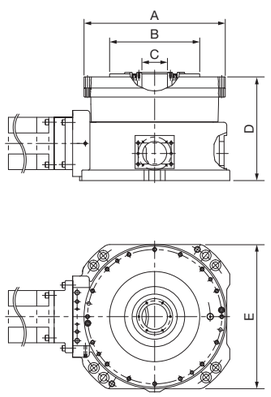

900A

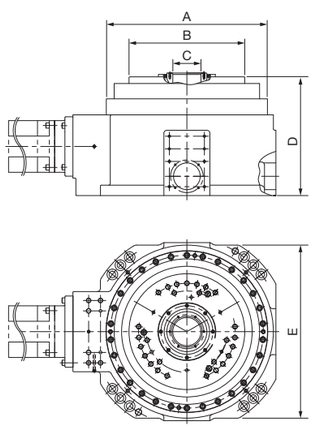

© 2021 Nabtesco Corporation. All rights reserved.

RH-N

PRODUCT WEB SITE

RH-N

The most compact of all our solid shaft gearhead models

This model is designed to deliver high torque from a compact, lighter weight body. Featuring mounting parts compatible with all major servomotors and sealed with grease before shipping, this model's time-saving design makes it easier to use than ever.

FEATURES

- High torque
- Compact/Lightweight
- Backlash ≤ 1 arc.min.
- Lost motion ≤ 1 arc.min.
- Internal main bearing
- Major servomotor fastener components included
- Completely sealed and pre-lubricated

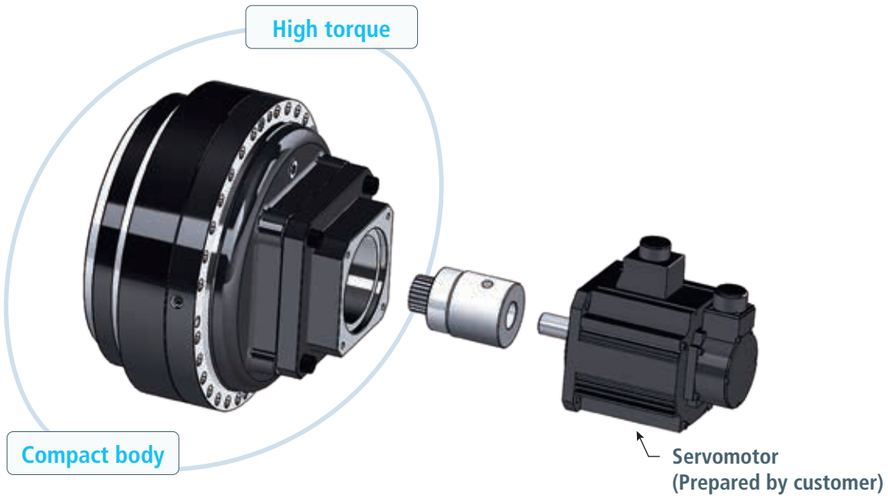

Torque comparison with RD2 series*

*Existing gearhead product

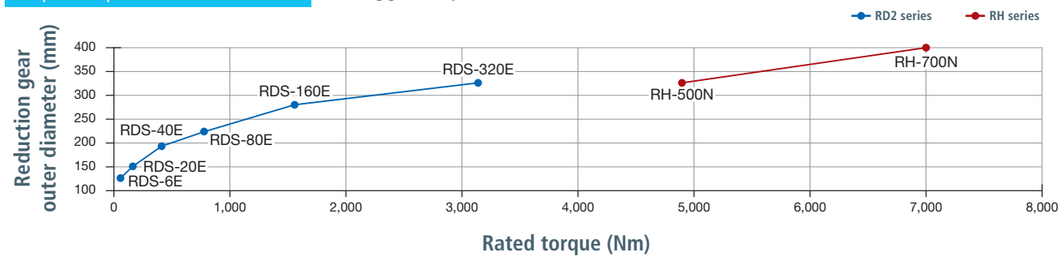

© 2021 Nabtesco Corporation. All rights reserved.

Pipe Bending

Skyhook positioner

High-load cantilever drive / cover opener/closer

RH-N SPECIFICATION

Model RH-	500N	700N
Standard ratio*1	81 105 123 144 159 192.75 209 222	105 118 142.44 159 183 203.52 228.5 268.42 284.4
Rated torque (Nm)	4,900	7,000
Allowable acceleration/deceleration torque (Nm)	12,250	17,500
Momentary max. allowable torque (Nm)	24,500	35,000
Rated output speed (rpm)	15	15
Allowable output speed: Duty ratio 40% (reference value) (rpm)*2	25	19
Rated service life (h)	6,000	6,000
Backlash/Lost motion (arc.min.)	1/1	1/1
Torsional rigidity (reference value) (Nm/arc.min.)	1,620	2,600
Allowable moment (Nm)	11,000	15,000
Allowable thrust load (N)	32,000	44,000

*1 Contact us regarding speed ratios other than those listed above.
*2 Duty ratio: 40% (The maximum allowable output speed will differ depending upon the duty ratio, load, and ambient temperature.)

RH-N DIMENSIONS

Model RH-	500N	700N
A (Ømm)	325	398
B (Ømm)	253h7	315h7
C (mm)	200	229.5
Weight (kg)*	75	135

* The weight of the motor flange and input gear is not included.

RH-N

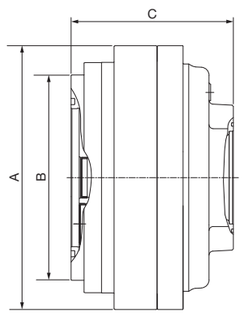

© 2021 Nabtesco Corporation. All rights reserved.

RH-C/CA

PRODUCT WEB SITE

RH-C/CA

A hollow shaft model ideal for high torque that features mounting taps and through holes for improved design flexibility

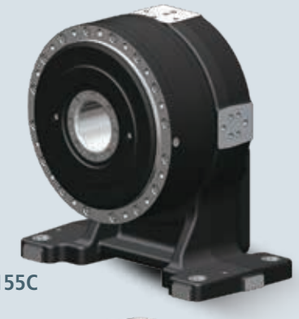

RH-155C

RH-900C

RH-320CA

FEATURES

Major servomotors of each company can be installed.

Slimmer profile

Completely sealed and pre-lubricated

Supply/discharge port arranged for easier grease replacement

RH-155C

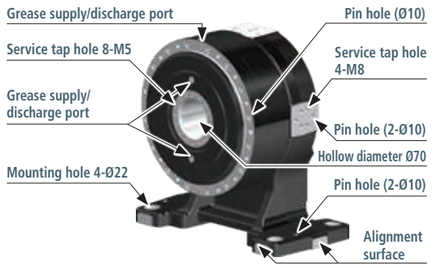

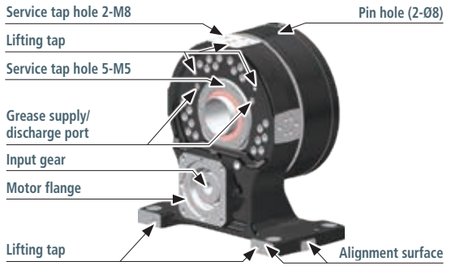

RH-320CA

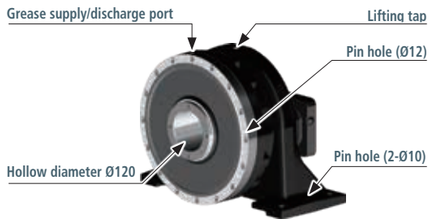

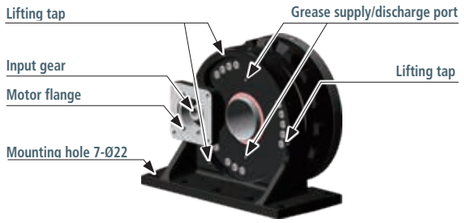

RH-900C

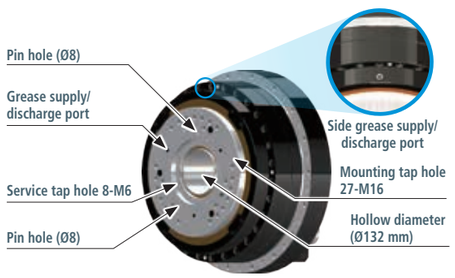

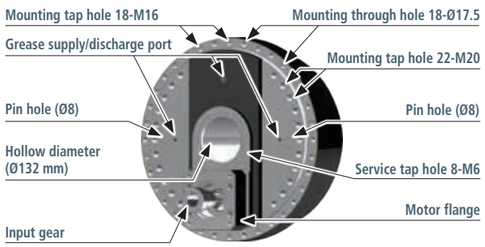

© 2021 Nabtesco Corporation. All rights reserved.

Large Index Table with Ultra-low Profile

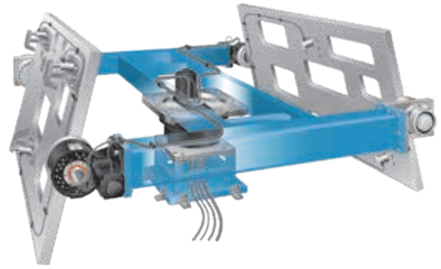

Dual Support BBQ Positioner

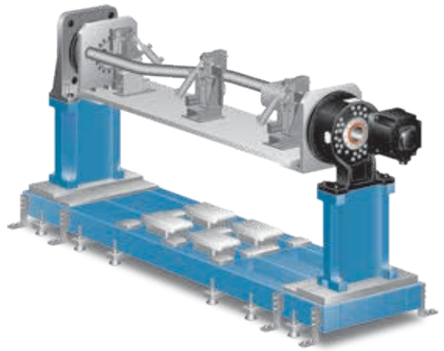

Antenna

RH-C/CA SPECIFICATION

Model RH-	155C	320CA	900C
Standard ratio	78.3 104.4 120.46*	152	186 258 330
Rated torque (Nm)	1,470	3,136	8,820
Allowable acceleration/ deceleration torque (Nm)	3,675	7,840	22,050
Momentary max. allowable torque (Nm)	7,350	15,680	44,100
Rated output speed (rpm)	15	15	15
Allowable output speed: Duty ratio 35% (reference value) (rpm)	51	64	28
Rated service life (h)	6,000	6,000	6,000
Backlash/Lost motion (arc.min.)	1/1	1/1	1/1
Torsional rigidity (reference value) (Nm/arc.min.)	735	1,960	4,900
Allowable moment (Nm)	4,000	20,580	44,100
Allowable thrust load (N)	16,000	29,400	88,200

* These speed ratios are indivisible figures.

RH-C/CA DIMENSIONS

Model RH-	155C	320CA	900C
A (Ømm)	295	450	610
B (Ømm)	250h7	400h7	390h7
C (mm)	228.5	364.5	-
D (mm)	218.5	252.5	335
E (Ømm)	70	120	132
F (mm)	375	445	-
G (mm)	380	600	-
Weight (kg)*	90	212	410

* The weight of the input gear and motor flange is not included.

RH-155C

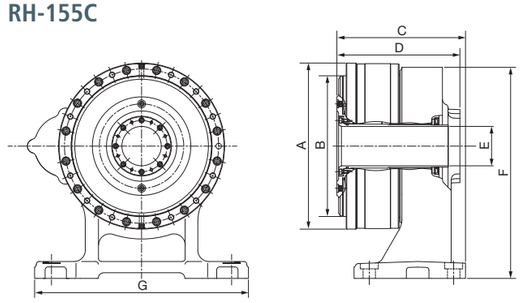

RH-320CA

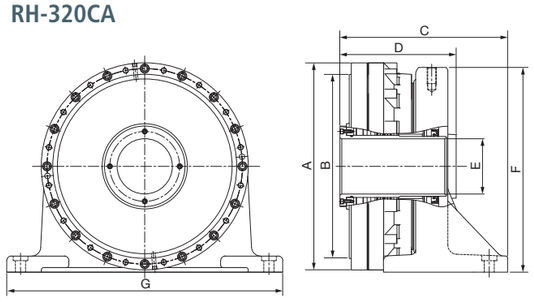

RH-900C

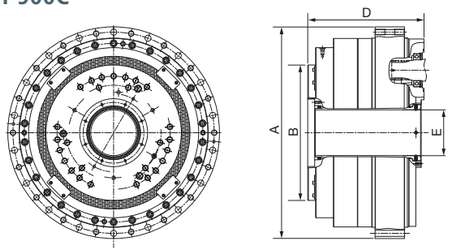

© 2021 Nabtesco Corporation. All rights reserved.

GEARHEADS

Examples of modifying gearheads by request

Customizations of our current lineup

We are already creating customized versions of some Nabtesco products in response to customer requests.
Let's look at some examples.

Example of customization

Improving facial runout

For customers who require greater accuracy during rotation, we are able to more precisely machine the shaft surfaces of our Precision Reduction Gear RV™ to be mounted on our customers' base units. This processing creates smoother surfaces and significantly improves the accuracy of facial runout during rotation!

Applications

5-axis MC

Welding Positioner

Antenna

For any requests, please contact our sales department directly or apply via our Website.

Example of customization

Adjusting for lost motion

For customers who desire even greater positioning accuracy, we can adjust our products to keep lost motion within half the normal level. The modification delivers a major improvement in repeatability!

Applications

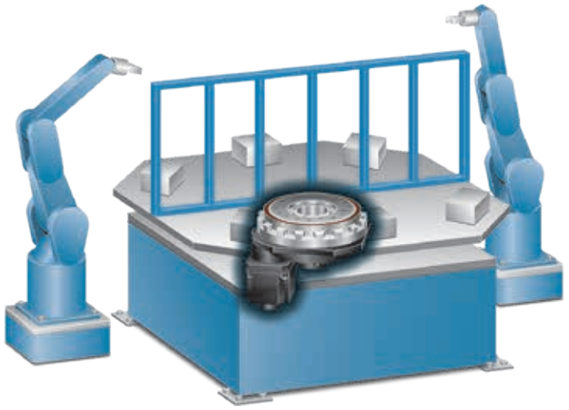

Welding robots

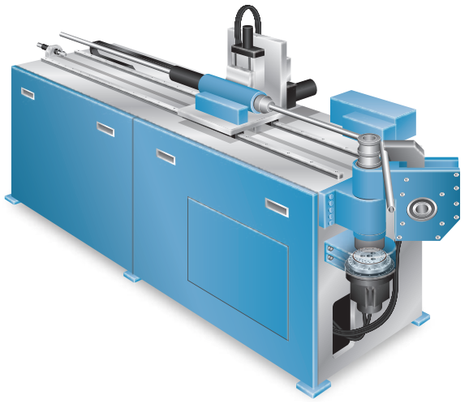

Machine tools

For any requests, please contact our sales department directly or apply via our Website.

© 2021 Nabtesco Corporation. All rights reserved.
© 2021 Nabtesco Corporation. All rights reserved.

GEARHEADS

Examples of modifying gearheads by request

Dedicated products for specific applications

Waterproof application equivalent to IP X9K

BENEFITS

- Waterproof and rustproof structure
- Compatibility with FDA-certified lubricants
- Fully cleanable stainless steel exterior

Name of each section

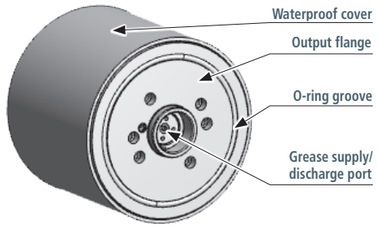

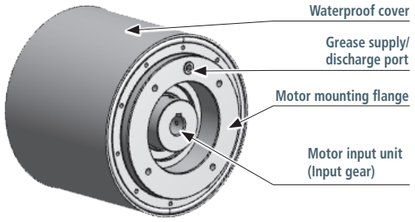

Applications

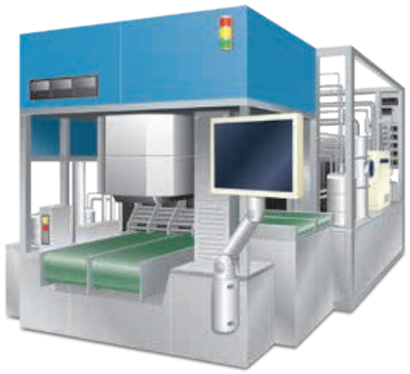

Food production equipment

Dedicated products for specific applications

Brake-assisted application

BENEFITS

- Operation of brakes even during power outages for greater safety and security
- Safety mechanism equipped with brake assist
- Space-saving design with a right angle input shaft
- Easy installation

Applications

Opening and closing of large electric doors

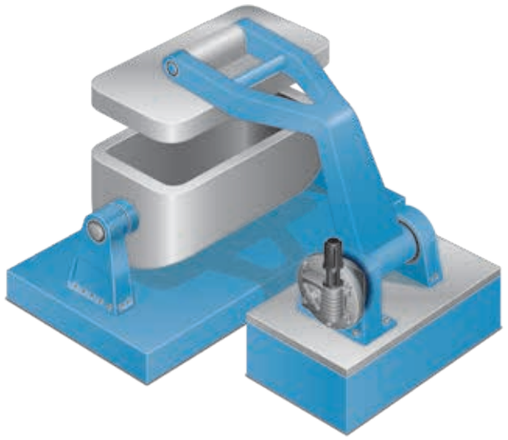

Opening and closing of lids for steel production equipment

© 2021 Nabtesco Corporation. All rights reserved.
© 2021 Nabtesco Corporation. All rights reserved.

GH

PRODUCT WEB SITE

GH-P GH-S

Gearhead Model for High Speed Rotation

High speed precision reduction gearhead model. With motor fittings that are compatible with major servomotor manufacturers and sealed with grease before shipping, the GH series design creates a convenient package for our customers.
This gearhead can be used in many applications such as traveling shafts and lifting shafts.

FEATURES

- High speed rotation
- Enhanced shock load resistance
- Reduced cycle time (Rapid acceleration and deceleration)
- Internal main bearing
- Major servomotor fastener components included
- Completely sealed and pre-lubricated

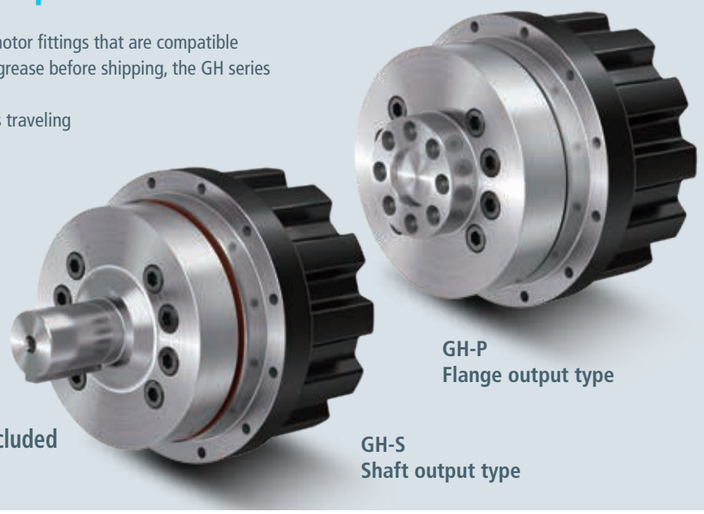

Nabtesco® RV® GH Series × KHK® Rack & Pinion

A collaboration between Nabtesco and KHK (Kohara Gear Industry) to offer a complete solution with Nabtesco Precision Reduction Gear RV™ and KHK gear rack and pinions. Both companies offer a standard lineup, which means fast delivery and no time needed for design.

The optimum KHK rack and pinion products for the GH series can be selected on our website. (English version coming soon)

Please use this QR code to access further details on rack and pinion products.

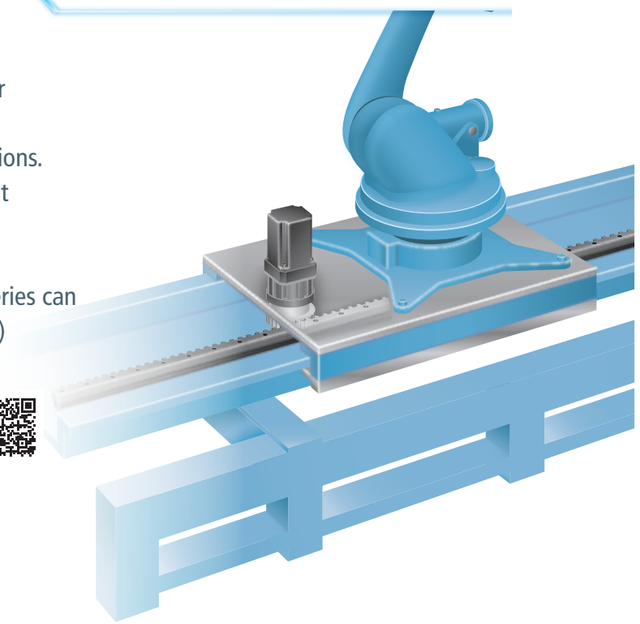

© 2021 Nabtesco Corporation. All rights reserved.

Slider

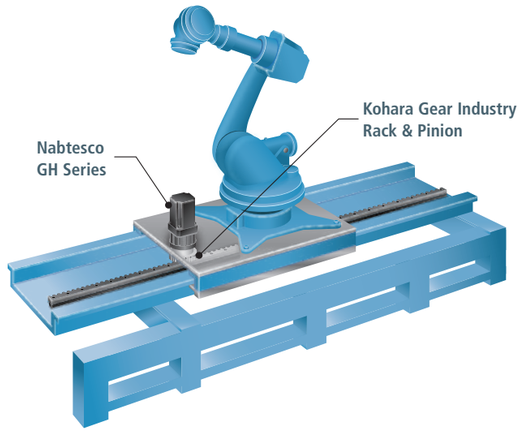

AGV

GH SPECIFICATION

Model GH-	7	17	24	40	100
Standard ratio	11* 21 31*	11 21 31	11 21 31	11* 21 31*	20.375 31.4
Rated torque (Nm)	69	167	235	392	980
Allowable acceleration/ deceleration torque (Nm)	206	500	706	1,176	2,942
Momentary max. allowable torque (Nm)	480	1,166	1,646	2,744	6,865
Rated output speed (rpm)	50	50	50	50	50
Allowable output speed: Duty ratio 30% (reference value) (rpm)	270	270	250	250	135
Rated service life (h)	6,000	6,000	6,000	6,000	6,000
Backlash/Lost motion (arc.min.)	6/6	6/6	6/6	6/6	10/10
Torsional rigidity (reference value) (Nm/arc.min.)	20	45	65	108	382
Allowable moment (Nm)	460	804	843	1,823	4,900
Allowable thrust load (N)	1,372	1,960	2,940	2,940	5,586

* These speed ratios are indivisible figures.

GH DIMENSIONS

Model GH-		7	17	24	40	100
A (Ømm)		140	180	195	240	382
B (Ømm)		120h7	151h7	160h7	200h7	310h7
C (mm)	GH-P	136.2	157	146	202.2	237
	GH-S	158.2	200.2	205	281.2	-
D (Ømm)	GH-P	55h7	72h7	42js6	108h7	144h7
	GH-S	28h6	38h6	50h6	60h6	-
Weight (kg)	GH-P	8	15.5	15.5	35.5	90
	GH-S	8.1	15.6	17	37.9	-

GH-P Flange output type

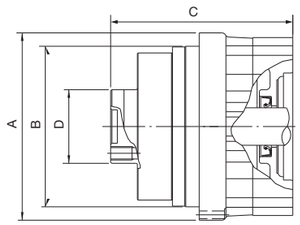

GH-S Shaft output type

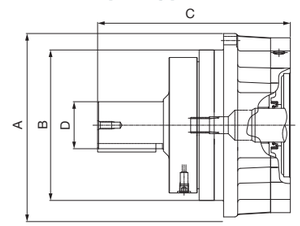

© 2021 Nabtesco Corporation. All rights reserved.

RA-EA/EC

PRODUCT WEB SITE

RA-A RA-C

Gearhead that ensures high precision indexing of the ATC arms and magazines of machining centers, tool posts of lathe turrets, etc.

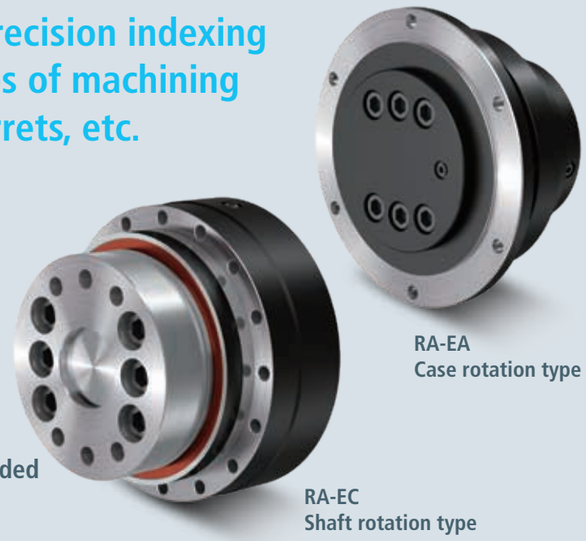

RA-EA
Case rotation type

RA-EC
Shaft rotation type

FEATURES

Backlash ≤ 1 arc.min.

Lost motion ≤ 1 arc.min.

Internal main bearing

Major servomotor fastener components included

Completely sealed and pre-lubricated

RA-EA/EC SPECIFICATION

Model RA-		20EA/20EC	40EA/40EC	80EA/80EC	160EA/160EC
Standard ratio	EA	80, 104, 120, 140, 160	80, 104, 120, 152	80, 100, 120, 152	80, 100, 128, 144, 170
	EC	81, 105, 121, 141, 161	81, 105, 121, 153	81, 101, 121, 153	81, 101, 129, 145, 171
Rated torque (Nm)		167	412	784	1,568
Allowable acceleration/ deceleration torque (Nm)		412	1,029	1,960	3,920
Momentary max. allowable torque (Nm)		833	2,058	3,920	7,840
Rated output speed (rpm)		15	15	15	15
Allowable output speed: Duty ratio 40% (reference value) (rpm)		75	70	70	45
Rated service life (h)		6,000	6,000	6,000	6,000
Backlash/Lost motion (arc.min.)		1/1	1/1	1/1	1/1
Torsional rigidity (reference value) (Nm/arc.min.)		49	108	196	392
Allowable moment (Nm)		882	1,666	2,156	3,920
Allowable thrust load (N)		3,920	5,194	7,840	14,700

RA-EA/EC DIMENSIONS

Model RA-	20EA/20EC	40EA/40EC	80EA/80EC	160EA/160EC
A (Ømm)	175/150	230/192	260/226	325/290
B (Ømm)	140h7/124h7	180h7/160h7	210h7/190h7	270h7/240h7
C (Ømm)	124h7/110h7	160h7/140h7	190h7/170h7	240h7/210h7
D (mm)	17/59.1	14/65	16/77	15/108
E (mm)	93.6/59	119.1/78	127/72	168/85.5
Weight (kg)	10/9.5	18.5/20	28/27	58/59

RA-EA
Case rotation type

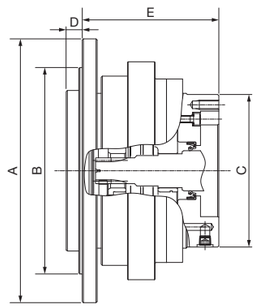

RA-EC
Shaft rotation type

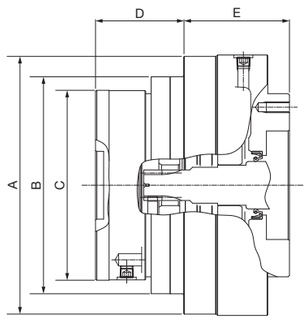

HR

Vacuum Sealing Unit

HR series gearhead units combine a lip type vacuum seal and Precision Reduction Gear RV™ in a single highly compact device. They use a contact type lip that does not burst, helping to improve the safety and assembly times of robots and other equipment for transporting items such as FPDs and wafers.

FEATURES

Support of high vacuums

Compact and easy to install and operate

Non-bursting, contact type lip seal

HR SPECIFICATION

Model HR	Vacuum sealing
Ref. degree of vacuum (Pa)	1.0×10^{-5}
He leak rate (Pa·m³/s)	1.0×10^{-10}
Heat resistant temperature (°C)	80
Cleanness	Class10(ISO 4)
Recommended maintenance cycle	27,000 rotations or 2.5 years, whichever comes first
Allowable speed (rpm)	20 (However, the heat resistant temperature should not be exceeded)

Gearhead Unit for High Vacuums

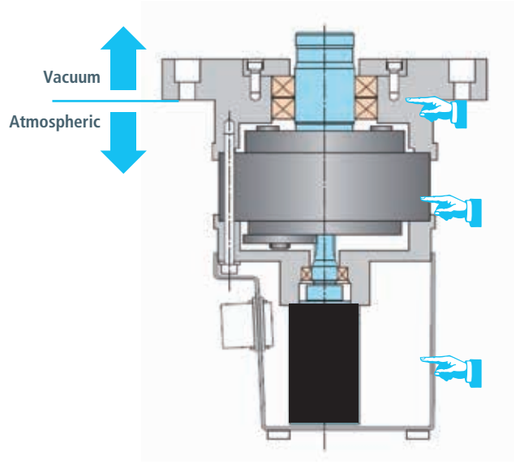

All-in-One

Lip type vacuum seal
Shaft diameter: Ø27 to 285

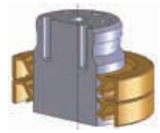

RV™ / RD2

Servomotor (Prepared by customer)

© 2021 Nabtesco Corporation. All rights reserved.
© 2021 Nabtesco Corporation. All rights reserved.

AF-N/C

PRODUCT WEB SITE

AF-N AF-C

A highly compact actuator that is directly connected to a servomotor

AF series models combine a Precision Reduction Gear RV™ and Panasonic servomotor in a single compact unit that delivers outstanding accuracy, rigidity and reliability.
This series features a built-in drive unit, which greatly simplifies the process of designing how to integrate and assemble them into the equipment and also significantly improves ease of use.

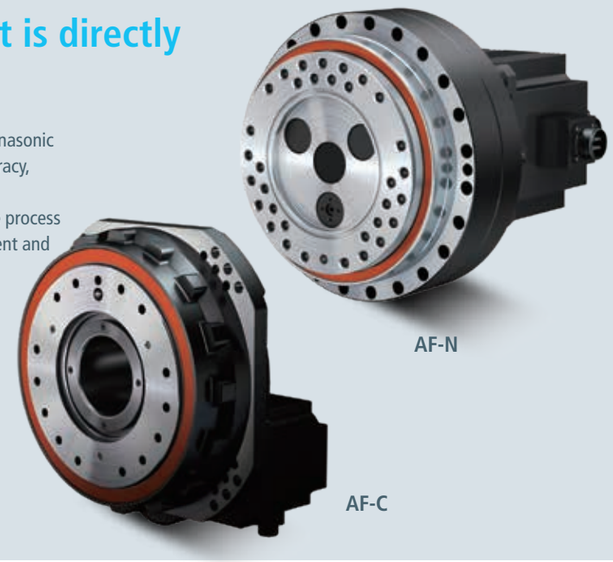

FEATURES

- Fully integrated with Panasonic servomotor
- Completely sealed and pre-lubricated
- Solid shaft & hollow shaft
- High accuracy (backlash ≤ 1 arc.min.)
- Compact body

BENEFITS

Reduction of Required Parts & Assembly Time

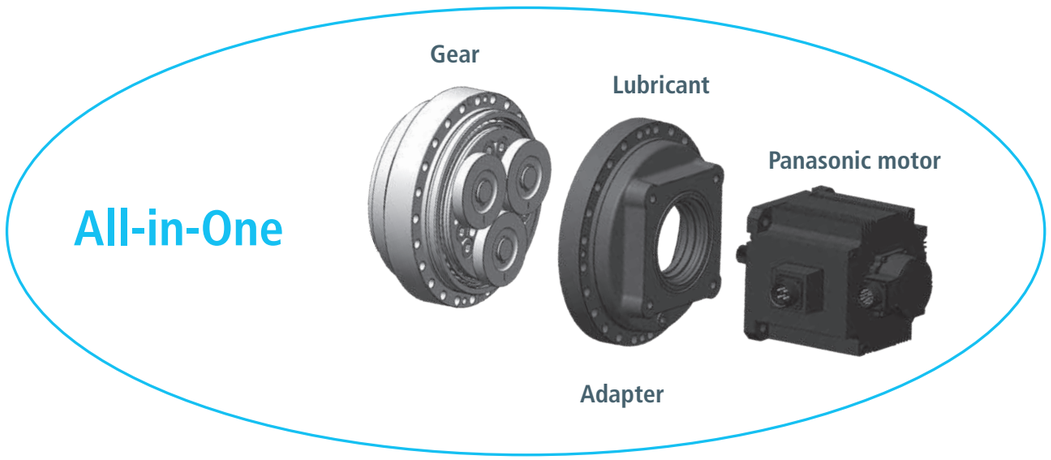

AF-N SPECIFICATION

Model AF-		17N	17N	42N	42N	80N	125N	380N	500N
Motor	Series	A6							
	Representative model	MHMF042L2	MDMF102L3	MDMF102L2	MDMF152L2	MDMF202L2	MHMF302L3	MDMF402SC	MDMF402L2
	Rated capacity (kW)	0.4	1.0	1.0	1.5	2.0	3.0	4.0	4.0
	Brake	With/Without	With	With	With	With	With	With	With
	Encoder spec.	Single rotation: 23 bit absolute Multi-rotation: 16 bit (battery backup)							
	Power voltage	200 to 230V AC+10%, –15% 50/60Hz							
Standard ratio		81	126	126	126	129	1,737/17	1,525/7	757/3
Rated torque (Nm)		82	415	481	722	986	1,169	3,329	3,856
Momentary max. torque (Nm)		289	415	1,029	1,029	1,960	3,062	9,310	11,567
Rated output speed (rpm)		37	15.9	15.9	15.9	15.5	19.6	9.2	7.9
Momentary max. speed (rpm)		80.2	31.7	31.7	31.7	31	39.1	17.4	15.1
Brake holding torque (Nm)		-/130	1,726	1,726	1,726	1,767	2,554	5,447	6,308
Allowable load inertia moment (kgm^2)		11	117	117	164	221	473	2,472	3,311
Backlash/Lost motion (arc.min.)		1/1	1/1	1/1	1/1	1/1	1/1	1/1	1/1
Torsional rigidity (reference value) (Nm/arc.min.)		36	36	113	113	212	334	948	1,620
Allowable moment (Nm)		784	784	1,660	1,660	2,150	3,430	7,050	11,000
Allowable thrust load (N)		2,610	2,610	5,220	5,220	6,530	13,000	25,000	32,000

AF-N DIMENSIONS

Model AF-	17N (0.4 kW)	17N (1.0 kW)	42N (1.0 kW)	42N (1.5 kW)	80N	125N	380N	500N
A (Ømm)	133	133	159	159	189	221	295	325
B (Ømm)	94h7	94h7	118h7	118h7	140h7	160h7	222h7	253h7
C (mm)	189 / 218.3 With/Without	249.2	255	269	293.4	331.4	384.15	390
D (□mm)	60	130	130	130	130	176	176	176
Weight (kg)	7.2 (6.8)	15	16	17	26	39.7	75.1	91.1

The value in brackets is the specification for the type without a brake.

AF-C SPECIFICATION

Model AF-		50C	120C	200C	320C	320C
Motor	Series	A6				A5
	Representative model	MDMF102L2	MDMF202L2	MHMF302L2	MHMF502L3	MDME502SC
	Rated capacity (kW)	1.0	2.0	3.0	5.0	5.0
	Brake	Without	Without	With	With	With
	Encoder spec.	Single rotation: 23 bit absolute Multi-rotation: 16 bit (battery backup)				Single rotation: 17 bit absolute Multi-rotation: 16 bit (battery backup)
	Power voltage	200 to 230V AC+10%, –15% 50/60Hz				
Standard ratio		2289/19	120	155.96	157	157
Rated torque (Nm)		460	917	1,784	3,002	3,002
Momentary max. torque (Nm)		1,225	2,746	4,900	7,840	7,840
Rated output speed (rpm)		16.6	16.7	12.8	12.7	12.7
Momentary max. speed (rpm)		33.2	33.3	25.6	22.3	19.1
Brake holding torque (Nm)		-	-	3,899	6,924	3,847
Allowable load inertia moment (kgm^2)		84	158	1,057	1,763	1,216
Backlash/Lost motion (arc.min.)		1/1	1/1	1/1	1/1	1/1
Torsional rigidity (reference value) (Nm/arc.min.)		255	588	980	1,960	1,960
Allowable moment (Nm)		1,764	3,920	8,820	20,580	20,580
Allowable thrust load (N)		11,760	15,680	19,600	29,400	29,400

AF-C DIMENSIONS

Model AF-	50C	120C	200C	320C	320C
A (mm)	284	317.5	418	491.5	491.5
B (Ømm)	176h7	199h7	260h7	340h7	340h7
C (mm)	303	354.1	467.5	508.5	499
D (Ømm)	48	61	75	120	120
Weight (kg)	32	43	113	164	163

AF-N

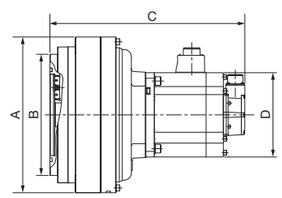

AF-C

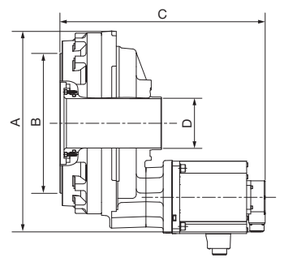

© 2021 Nabtesco Corporation. All rights reserved.
© 2021 Nabtesco Corporation. All rights reserved.

RVW®

PRODUCT WEB SITE

RVW®

PRODUCT VIDEO

AGV Drive Unit

The RVW® series' integrated in-wheel design incorporates a reduction gear inside a Mecanum wheel, making it more compact yet still able to support the large loads needed for AGVs.

FEATURES

Loading capacity of 1,960 to 24,500 N

Integrated unit including a Mecanum wheel and reduction gear

In-wheel design

What is the Mecanum concept?

Mecanum AGV can travel smoothly in all directions and change direction freely.
Moving into narrow spaces and accurate positioning are possible.
It is suitable for applications that require transport within less space and accurate positioning.

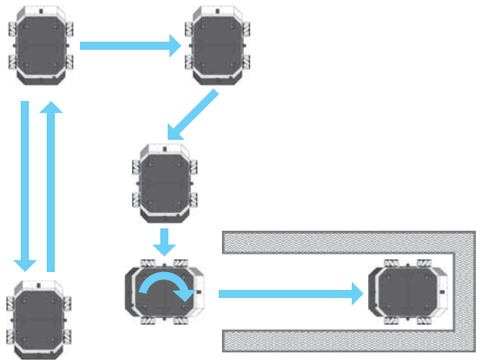

BENEFITS

Travelling in all directions

Heavy objects can be easily transported!
Mecanum wheel suitable for high loads

Example (RVW-10PG)
Loading capacity 4,900 N / Mecanum wheel

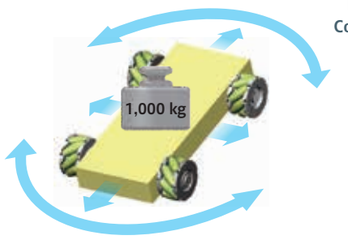

Easy installation

Mecanum AGV assembly made simple!
Just install the Mecanum Wheel Drive Unit onto the AGV frame.

Example: Conventional product

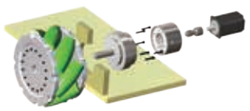

Example: Nabtesco drive unit

Compact body

Making compact AGV design possible!
Uses an in-wheel structure.

Example: Conventional product

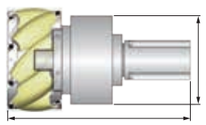

Example: Nabtesco drive unit

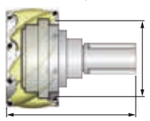

© 2021 Nabtesco Corporation. All rights reserved.

Autonomous mobile robot

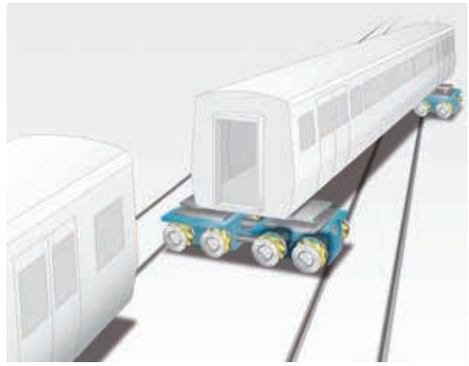

Assembly and maintenance of railroad vehicles

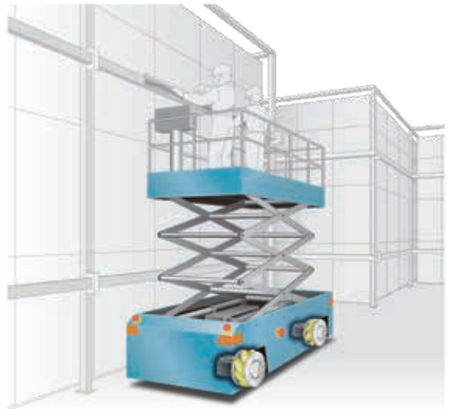

All-direction lifter
Aerial work platform

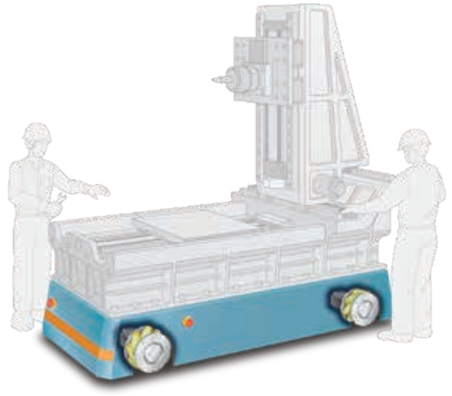

Transport of machines during assembly process

RVW® SPECIFICATION

Model RVW-	7PG	10PG	15PG	20PG
Allowable loading capacity/wheel (N) *1	1,960	4,900	14,700	24,500
Max. speed for allowable loading capacity (m/min)	60	60	30 [60*3]	30 [60*4]
Standard ratio	30	34.73	52.8	80
Backlash (arc.min.) *2	12	12	12	12
Lost motion (arc.min.) *2	12	12	12	12
Rated torque (Nm)*2	7	100	350	1,225
Allowable acceleration/deceleration torque (Nm)*2	16	300	1,050	2,000

*1 When the vehicle incorporates four Mecanum wheels, it is recommended that the total weight of the vehicle and its load should be less than three times the allowable loading capacity for one wheel, after taking into account variations in load distribution due to road surface conditions, etc.
*2 Performance of the reduction gear unit.
*3 Speed at a load of 7,350 N/wheel or less.
*4 Speed at a load of 12,250 N/wheel or less.

RVW® DIMENSIONS

Model RVW-	7PG	10PG	15PG	20PG
A (Ømm)	178	254	381	508
B (mm)	96	134	200	278
C (mm) *5	118	166	234	308
Weight (kg) *5	12	32	104	210

*5 Subject to change depending on motor.

RVW®

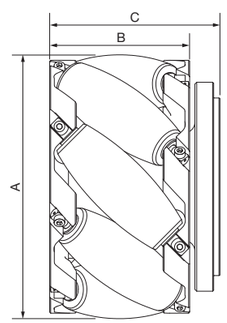

© 2021 Nabtesco Corporation. All rights reserved.

RVGREASE™ LB00

PRODUCT WEB SITE

RVGREASE™

Specially developed grease that allows Precision Reduction Gear RV™ to perform at their full potential

This high quality grease offers superior lubricating performance, with special properties that enable smooth rotation even during low temperature, low speed operation. Compared to existing greases, it provides exceptional performance during motor loads occurring under low temperatures, thereby reducing input torque and ensuring excellent rotation.

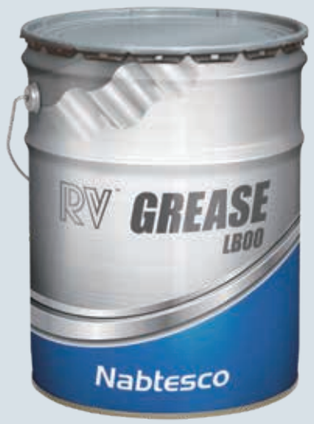

Product appearance: Set of 10 small 270 g pouches / 16 kg pail / 170 kg drum

Application is extremely easy and efficient with this convenient set! It includes a high power grease gun and disposable size cartridges that do not need refilling.

Product appearance: pouch, 270 g

Sold in sets of 10

Special starter kit

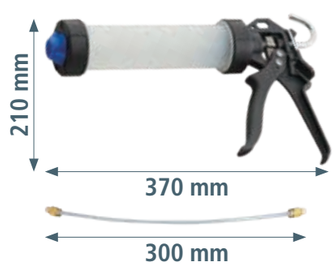

Contents of kit: Grease gun, dedicated hose

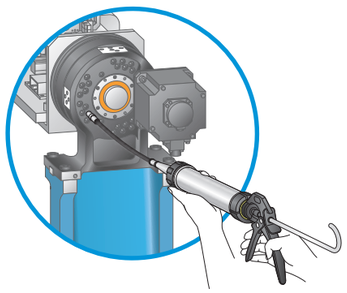

Usage example

Test items		Test method	RVGREASE™ LB00
Thickener		–	Lithium soap
Base oil		–	Synthetic hydrocarbon oil, Mineral oil
Base oil kinematic viscosity (40°C), mm²/s		JIS K 2220 23. ASTM D 445	71.8
Appearance		–	Yellowish brown, buttery
Worked penetration		JIS K 2220 7. ASTM D 217	410
Dropping point, °C		JIS K 2220 8. ASTM D 566	188
Oxidation stability (99°C, 100 h), kPa		JIS K 2220 12. ASTM D 942	10
Working stability		JIS K 2220 15. FTMS 791C-313	427
Low-temperature torque (-30°C), mN•m	Drive torque	JIS K 2220 18. ASTM D 1478-63	140
	Rotational torque		30
Four-ball EP, N	L.N.S.L. W.P. L.W.I.	ASTM D 2596	1569 3089 647

Note: The numbers shown above are typical property values, and are not guaranteed.

© 2021 Nabtesco Corporation. All rights reserved.

RVOIL™ SB150

PRODUCT WEB SITE

RVOIL™

An advanced oil that greatly improves both lubricating performance and refilling work

While the need for high lubricating performance and ease of replacement are usually conflicting requirements, SB150 RVOIL™ has achieved an ideal balance by combining newly developed additives with a specialized base oil. This advanced high grade oil has been created as the ultimate lubricant for Precision Reduction Gear RV™, supplying all the required properties. Thanks to its continuing durability and high purity, it can be used without impairing the life of the reduction gear or its lubrication in any way.

Product appearance: 20 L can / 200 L drum

Test items		Test method	RVOIL™ SB150
Base oil		–	Synthetic hydrocarbon oil, Mineral oil
Base oil kinematic viscosity (40°C, 100°C), mm²/s		JIS K 2220 23. ASTM D 445	158 (40°C) 19.4 (100°C)
Viscosity Index		JIS K 2283	140
Appearance		–	Green
Flash point, °C		JIS K 2265-4	260
Rust-preventing characteristic (60°C, 24h)		ISO 7120 JIS K 2510	pass
Corrosiveness to copper (100°C, 3h)		ISO 2160 JIS K 2513	1a
Foaming characteristics (seq-I, 24°C), mL/mL		ISO 6247 JIS K 2518	0/0
Four-ball EP, N	L.N.S.L. W.P. L.W.I.	ASTM D 2783	981 1961 410

Note: The numbers shown above are typical property values, and are not guaranteed.

© 2021 Nabtesco Corporation. All rights reserved.

Considering the use of our product

This product features high precision and high rigidity, however, it is necessary to strictly comply with various restrictions and make appropriate to maximize the product's features. Please read this technical document thoroughly and select and adopt an appropriate model based on the actual operating environment, method, and conditions your facility.

Export

When this product is exported from Japan, it may be subject to the export regulations provided in the "Foreign Exchange Order and Export Trade Control Order". Be sure to take sufficient precautions and perform the required export procedures in advance if the final operating party is related to the military or the product is to be used in the manufacture of weapons, etc.

Application

If failure or malfunction of the product may directly endanger human life or if it is used in units which may injure the human body (atomic facilities, space equipment, medical equipment, safety units, etc.), examination of individual situations is required. Contact our agent or nearest business office in such a case.

Safety measures

Although this product has been manufactured under strict quality control, a mistake in operation or misuse can result in breakdown or damage, or an accident resulting in injury or death. Be sure to take all appropriate safety measures, such as the installation of independent safeguards.

Product specifications indicated in this catalog

The specifications indicated in this catalog are based on Nabtesco evaluation methods. This product should only be used after confirming that it is appropriate for the operating conditions of your system. In addition, the reference values should be used purely for reference. They do not guarantee the indicated performance.

Operating environment

Use this product under the following environment:

- Location where the ambient temperature is between -10°C and 40°C (for AF series, between 0°C and + 40°C)
- Location where the humidity is less than 85% and no condensation occurs (for AF series, between 20% and 85% RH)
- Location where the altitude is less than 1,000 m
- Well-ventilated location

Do not install this product at the following locations.

- Locations where a lot of dust is collected
- Outdoor areas that are directly affected by wind and rain
- Locations near to areas that contain combustible, explosive, or corrosive gases and flammable materials
- Location that is heated due to heat transfer and radiation from peripherals and direct sun
- Locations where the performance of the motor can be affected by magnetic fields or vibration

Note 1: If the required installation environment cannot be established, contact our customer representative in advance.

Note 2: When using the reduction gear under special conditions (clean room, equipment for food, concentrated alkali, high-pressure steam, etc.), contact our customer representative in advance.

Maintenance

The standard replacement time for lubricant is 20,000 hours. However, when operation involves a reduction gear surface temperature above 40°C, the state of degradation of the lubricant should be checked in advance of that and the grease replaced earlier as necessary.

Operation temperature

Please operate under conditions where the surface temperature of the reduction gear does not exceed 60°C. If the temperature exceeds 60°C, there is a risk of damaging the product. The AF series also has addition limitations regarding the surface temperature of the motor. For details, please refer to the product catalogs and operation manuals.

Output rotation angle

When the range of the rotation angle is small (10 degrees or less), the service life of the reduction gear may be reduced due to poor lubrication or the internal parts being subject to a concentrated load.
Note: Contact us in case the rotation angle is 10 degrees or less.

Documents

Product details, safety information and detailed instructions can be found in the product catalogs and operation manuals.
These documents are downloadable from the following website.

URL : https://precision.nabtesco.com/en/

© 2021 Nabtesco Corporation. All rights reserved.

Glossary

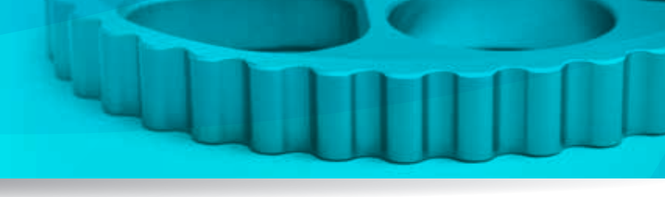

COMMON

Torsional rigidity, lost motion, backlash

When torque is applied to the output shaft while the input shaft is fixed, torsion occurs in the reduction gear. The change in torsion is described in the hysteresis curve, and Torsional rigidity, lost motion and backlash can be calculated from this data.

Allowable Moment and Allowable Thrust Load

The external load moment may be applied to the reduction gear during normal operation. The allowable values of the external moment and the external axial load at this time are each referred to as "allowable moment" and "Allowable Thrust Load".

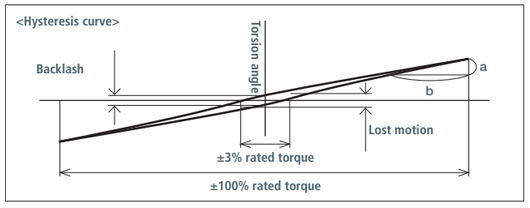

For COMPONENT SETS, GEARHEADS

Rated service life

The lifetime resulting from the operation with the rated torque and the rated output speed is referred to as the "rated service life".

Momentary maximum allowable torque

A large torque may be applied to the reduction gear due to execution of emergency stop or by an external shock. In such a situation, the allowable value of the momentary applied torque is referred to as "momentary maximum allowable torque".

Note: Be careful that the momentary excessive torque does not exceed the momentary maximum allowable torque.

Allowable acceleration/deceleration torque

When the machine starts or stops, the load torque to be applied to the reduction gear is larger than the constant-speed load torque due to the effect of the inertia torque of the rotating part. In such a situation, the allowable torque during starting/stopping is referred to as "allowable acceleration/deceleration torque".

Note: Be careful that the load torque, which is applied at startup and stop, does not exceed the allowable acceleration/deceleration torque.

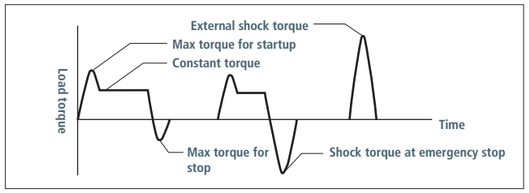

Allowable output speed

The allowable value for the reduction gear's output speed during operation without a load is referred to as the "allowable output speed".

Note: Depending on the conditions of use (duty ratio, load, ambient temperature), the reduction gear temperature may exceed 60°C even when the speed is under the allowable output speed. In such a case, either take cooling measures or use the reduction gear at a speed that keeps the surface temperature at 60°C or lower.

For SERVO ACTUATORS

Rated torque

Calculated value with consideration of the motor rated torque, reduction speed ratio, and reduction gear efficiency.

Momentary maximum allowable torque

Calculated value with consideration of the motor torque, reduction speed ratio, and reduction gear efficiency when the motor torque limit is set.

Rated output speed

Calculated value with consideration of the motor rated speed and reduction speed ratio.

Momentary maximum output speed

Calculated value with consideration of the motor maximum speed and reduction speed ratio.

Note: Be aware of cooling conditions so that the surface temperature of the reduction gear does not exceed 60°C during use.

Brake holding torque

Calculated value with consideration of the motor brake torque, reduction speed ratio, and reduction gear efficiency.

Note: The motor built-in brake is for holding the stop state. Do not use the brake to stop a moving load.

© 2021 Nabtesco Corporation. All rights reserved.

Introduction of Our Website

On the Website, you can use our product selection system and also download catalogues, user manuals and 2D/3D CAD drawing data for products. (Membership registration is required.)
URL : https://precision.nabtesco.com/en/

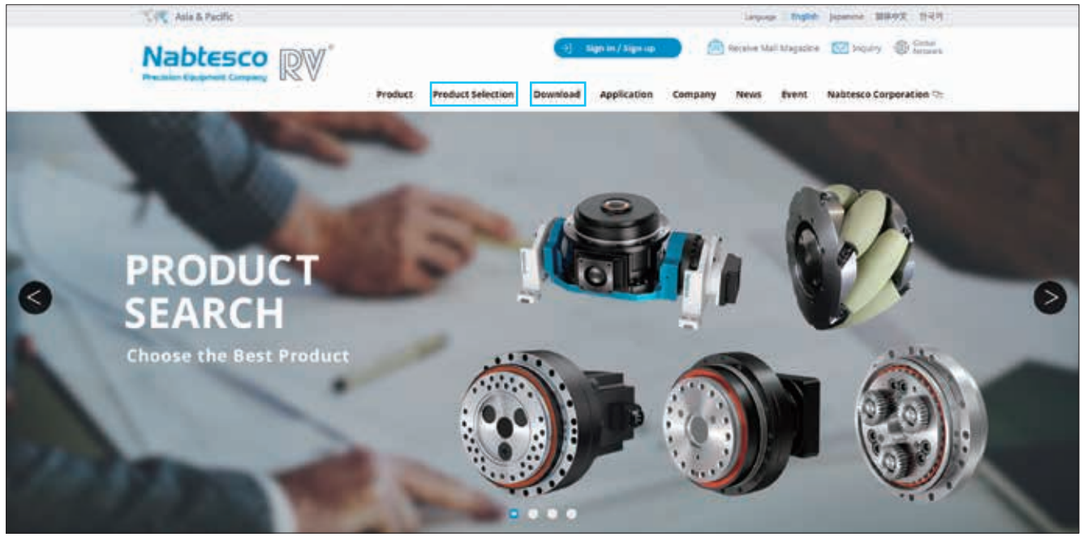

Download

- 2D/3D CAD Drawings
- Product Catalogs
- Product Leaflets
- Operation Manuals

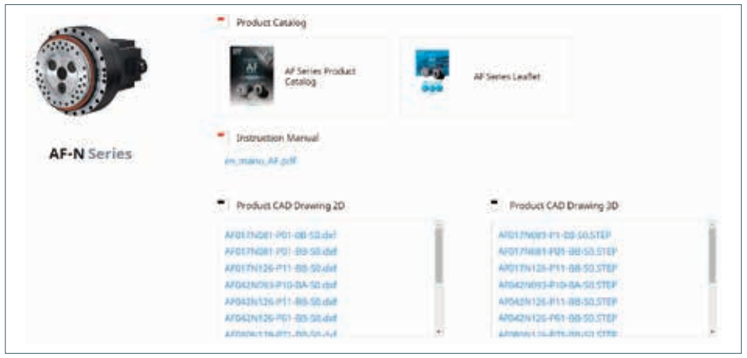

Product Selection

- Simple Product Selection
- Detailed Product Selection
- GH Product Selection

A digital version of this catalogue can also be accessed on the Website.
(Suitable for PCs, smartphones, tablets)

© 2021 Nabtesco Corporation. All rights reserved.

Warranty

1. In the case where Nabtesco confirms that a defect of the Product was caused due to Nabtesco's design or manufacture within the Warranty Period of the Product, Nabtesco shall repair or replace such defective Product at its cost. The Warranty Period shall be from the delivery of the Product by Nabtesco or its distributor to you ("Customer") until the end of one (1) year thereafter, or the end of two thousand (2,000) hours from the initial operation of Customer' equipment incorporating the Product at end user's production line, whichever comes earlier.
2. Unless otherwise expressly agreed between the parties in writing, the warranty obligations for the Product shall be limited to the repair or replacement set forth herein. OTHER THAN AS PROVIDED HEREIN, THERE ARE NO WARRANTIES ON THE PRODUCT, EXPRESS OR IMPLIED, INCLUDING WITHOUT LIMITATION ANY IMPLIED WARRANTY OF MERCHANTABILITY OR FITNESS FOR A PARTICULAR PURPOSE.
3. The warranty obligation under the Section 1 above shall not apply if:
   (1) the defect was caused due to the use of the Product deviated from the Specifications or the working conditions provided by Nabtesco;
   (2) the defect was caused due to exposure to foreign substances or contamination (dirt, sand etc.)
   (3) lubricant or spare part other than the ones recommended by Nabtesco was used in the Product;
   (4) the Product was used in an unusual environment (such as high temperature, high humidity, a lot of dust, corrosive/volatile/inflammable gas, pressurized/depressurized air, under water/liquid or others except for those expressly stated in the Specifications);
   (5) the Product was disassembled, re-assembled, repaired or modified by anyone other than Nabtesco;
   (6) the defect was caused due to the equipment into which the Product was installed;
   (7) the defect was caused due to an accident such as fire, earthquake, lightning, flood or others; or
   (8) the defect was due to any cause other than the design or manufacturing of the Product.
4. The warranty period for the repaired/replaced Product/part under the Section 1 above shall be the rest of the initial Warranty Period of the defective Product subjected to such repair/replace.

© 2021 Nabtesco Corporation. All rights reserved.