KEYSTONE OPTISEAL WAFER AND LUGGED

A resilient seated butterfly valve for general purpose applications



GENERAL APPLICATION

Food and beverage processing, dry bulk conveying, paper mills, slurry handling etc. Grease or silicone free valves are available for special applications such as paint or oxygen systems.
OptiSeal with PTFE lined seat and PTFE covered disc stem is ideally suited to applications where excellent chemical resistance and non-toxic properties are required.

TECHNICAL DATA

Pressure (bar):	16 (CI body: 10 bar)
End of line (bar):	6-10-16
Temperature (°C):	-40 to +160
Sizes (DN):	40-1000

Flange accommodation wafer:

DN 40-500:	PN 10/16, ASME/ASTM B16.5 Cl#150, JIS 10K, BS table E
DN 600:	PN 10/16, ASME/ASTM B16.5 Cl#150, BS table E
DN 700-1000:	Single drilled

Flange accommodation lugged:

PN 10/16
ASME/ASTM B16.5 Cl#150
ASME/ASTM B16.47
Cl#150 series A
JIS 5K/10K

FEATURES

- Top bushing absorbs actuator side thrust loads.
- Actuator flange acc. ISO 5211.
- High solid, glossy, silicone free, paint system ensuring excellent corrosion resistance.
- Extended body neck allows pipe insulation.
- Body locating holes ease installation and centering between the flanges.
- Rounded polished disc edge gives full concentric sealing, lower torques, longer seat life and bubble-tight shut-off.
- The seat is field replaceable and fully isolates the body and stem from the flow.
- Primary stem sealing exceeds the pressure rating of the valve and prevents leakage through shaft area to atmosphere.
- A secondary shaft sealing provides back-up safety.
- No flange gaskets required.
- High C_v value.
- Top and bottom shaft bearings for optimized support and minimum friction in all body materials up to DN 300, except cast iron.
- Wafer and lugged body design, acc. EN 593, ISO 5752/5 short.
- All valves comply to Pressure Equipment Directive (97/23/EU) Module H - CE Marking.
- Available approvals: KIWA, ABS, DNV, CU-TR

© 2017 Emerson. All Rights Reserved.

Figure 14 wafer
DN 40-300

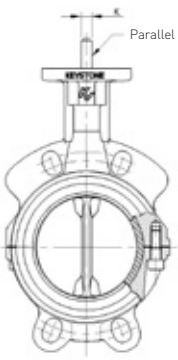

Figure 15 wafer
DN 350-1000

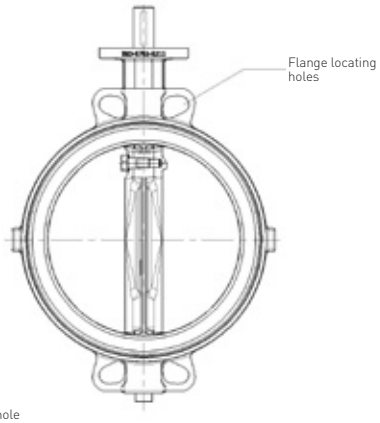

Figure 16 lugged
DN 40-300

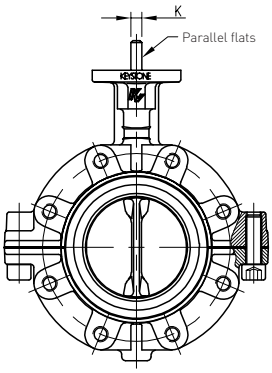

Figure 17 lugged
DN 350-1000

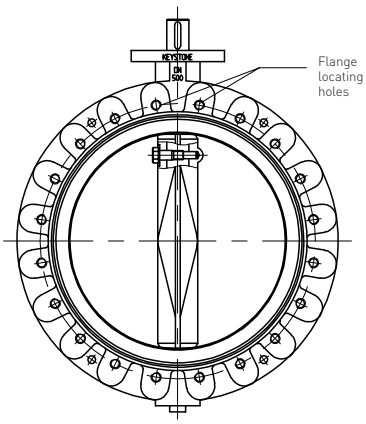

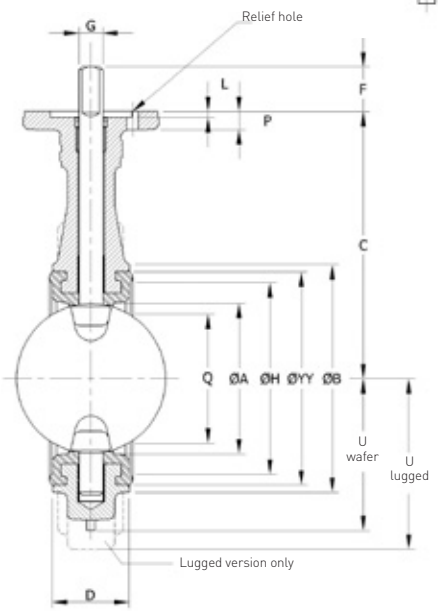

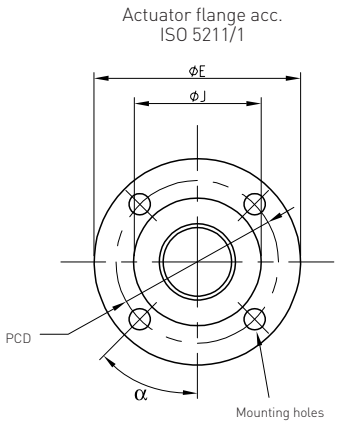

Figure 14 and 16

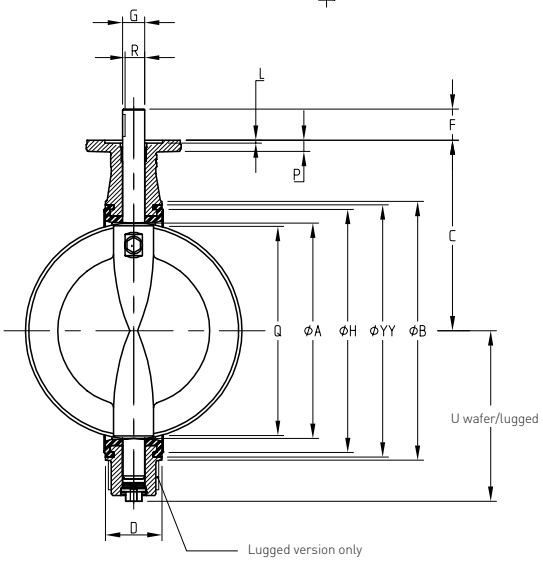

Figure 15 and 17

VALVE DIMENSIONS in mm

											Shaft				Actuator flange acc. ISO 5211/1									
Size (DN)	A	B	C	U Wafer	U Lugged	D	H	Q	YY	F	G_{h9}	$K_{-0.05}^{0}$	R	Key-size❖	Type	E	J	L	P	PCD	Hole ø	No holes	α	Wafer Mass (kg)	Lugged Mass (kg)
40	40	78	130	54	68	33	49	24	64	25	12	8	-	-	F-05	65	35	4	9	50	6.6	4	45	1.5	2.7
50	50	94	135	59	73	43	66	27	80	25	12	8	-	-	F-05	65	35	4	9	50	6.6	4	45	2.1	3.7
65	62	109	150	74	80	46	78	43	93	30	16	11	-	-	F-07	90	55	4	12	70	9.0	4	45	3.2	5.0
80	78	126	160	92	103	46	97	64	112	30	16	11	-	-	F-07	90	55	4	12	70	9.0	4	45	3.7	5.9
100	99	156	180	106	117	52	129	87	144	30	16	11	-	-	F-07	90	55	4	12	70	9.0	4	45	5.3	8.3
125	124	189	195	120	133	56	160	113	175	30	20	14	-	-	F-07	90	55	4	12	70	9.0	4	45	7.7	11.5
150	151	214	210	131	144	56	181	141	196	30	20	14	-	-	F-07	90	55	4	12	70	9.0	4	45	8.6	13.0
200	195	267	240	167	180	60	233	188	248	50	25	18	-	-	F-12	150	85	4	18	125	13.5	4	45	16.2	22.2
250	245	321	275	200	220	68	290	237	305	50	30	22	-	-	F-12	150	85	4	18	125	13.5	4	45	23.7	33.5

❖ Keysize width x height

NOTES

1. Flange accommodation must be specified when ordering.
2. Q is the disc chordal dimension at face of valve for disc clearance into pipe fitting or equipment.
3. Specify size, figure number, part name, material and flange accommodation when ordering spareparts.
4. Valve sizes shown are the DN 100 and DN 500.
5. Valve sizes DN 900/1000 have no separate lugs, but a double flange design.
6. * in case of super seat F = 100, G = 60, R = 53, keysize 18 x 11
7. For valves with composite discstem, the mass shown is ± 3% till 20% lower, depending on size and wafer- or lugged type. For investment cast bodies, the mass is ± 30% lower.

VALVE DIMENSIONS in mm (CONTINUED)

Size											Shaft				Actuator flange acc. ISO 5211/1									Wafer	Lugged
(DN)	A	B	C	U Wafer	U Lugged	D	H	Q	YY	F	G_{h9}	$K^{0}_{-0.05}$	R	Key-size❖	Type	E	J	L	P	PCD	Hole ø	No holes	α	Mass (kg)	Mass (kg)
300	292	375	310	234	245	78	340	283	355	50	30	22	-	-	F-12	150	85	4	18	125	13.5	4	45.0	32.2	51
350	325	413	325	274	274	78	378	319	398	70	35	-	30.0	10 x 8	F12	150	85	4	18	125	13.5	4	45.0	42	60
400	380	470	360	312	312	102	435	369	455	70	40	-	35.0	12 x 8	F16	210	130	6	25	165	22.0	4	45.0	64	120
450	434	530	395	348	348	114	495	422	515	70	40	-	35.0	12 x 8	F16	210	130	6	25	165	22.0	4	45.0	85	144
500	486	584	430	385	385	127	549	472	569	70	50	-	44.5	14 x 9	F16	210	130	6	25	165	22.0	4	45.0	107	173
600	585	685	500	456	456	154	650	569	670	*70	*50	-	*44.5	14 x 9*	F16	210	130	6	25	165	22.0	4	45.0	147	250
700	685	795	570	518	518	165	755	669	775	100	70	-	62.5	20 x12	F25	300	200	6	30	254	17.5	8	22.5	247	321
750	735	855	605	551	551	190	816	715	835	100	70	-	62.5	20 x12	F25	300	200	6	30	254	17.5	8	22.5	300	360
800	785	900	640	583	583	190	860	766	880	100	70	-	62.5	20 x12	F25	300	200	6	30	254	17.5	8	22.5	330	425
900	885	1000	715	-	659	203	960	865	980	100	80	-	71.0	22 x14	F25	300	200	6	30	254	17.5	8	22.5	448	650
1000	955	1112	780	-	715	216	1076	964	1080	129	90	-	81.0	25 x14	F30	350	230	6	35	298	22.0	8	22.5	600	800

❖ Keysize width x height

NOTES

1. Flange accommodation must be specified when ordering.
2. Q is the disc chordal dimension at face of valve for disc clearance into pipe fitting or equipment.
3. Specify size, figure number, part name, material and flange accommodation when ordering spareparts.
4. Valve sizes shown are the DN 100 and DN 500.
5. Valve sizes DN 900/1000 have no separate lugs, but a double flange design.
6. * in case of super seat F = 100, G = 60, R = 53, keysize 18 x 11
7. For valves with composite discstem, the mass shown is ± 3% till 20% lower, depending on size and wafer- or lugged type. For investment cast bodies, the mass is ± 30% lower.

FLANGE ACCOMMODATION WAFER

	Sizes (DN)		
	40-500	600	700-1000
PN 6	Optional	Optional	Optional
JIS 5K	Optional	Optional	Optional
PN 10/16	Yes	Yes	Single drilled
ASME/ASTM B16.5 Cl#150	Yes	Yes	-
ASME/ASTM B16.47 Cl#150 series A	-	-	Single drilled
JIS 10K	Yes	Optional	Single drilled
BS table E	Yes	Yes	Single drilled

DIMENSIONS OF FLANGE LOCATING HOLES (mm)

	PN 10				PN 16			
Size (DN)	T	U	V	X	T	U	V	X
700	M27	-	-	-	M33	55.5	22.5	62.5
750	M30	-	-	-	M33	63.0	30.0	70.0
800	M30	-	-	-	M36	61.0	25.0	70.0
900	M30	56.5	6.5	76.5	M36	60.5	6.5	76.5
1000	M33	73.0	23.0	85.0	M39	73.0	23.0	85.0

NOTES

1. T = thread type, U = full thread + V, X = max. bore depth.
2. All holes in lugged version are through threaded, except the holes closest to top and bottom shaft.

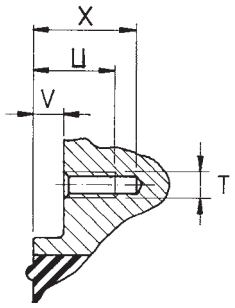

Figure 15 and Figure 17

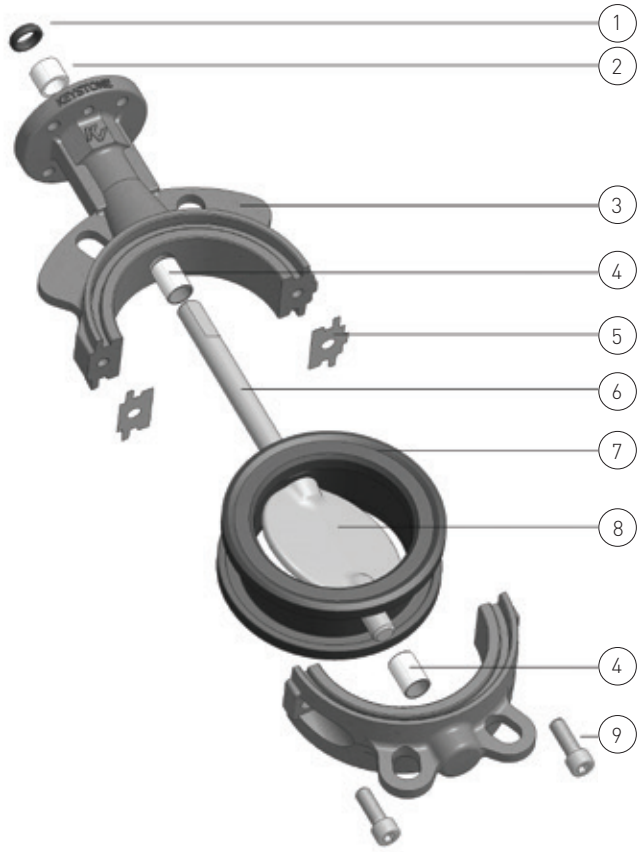

Figure 14/16 exploded view
(Ductile iron bodies)

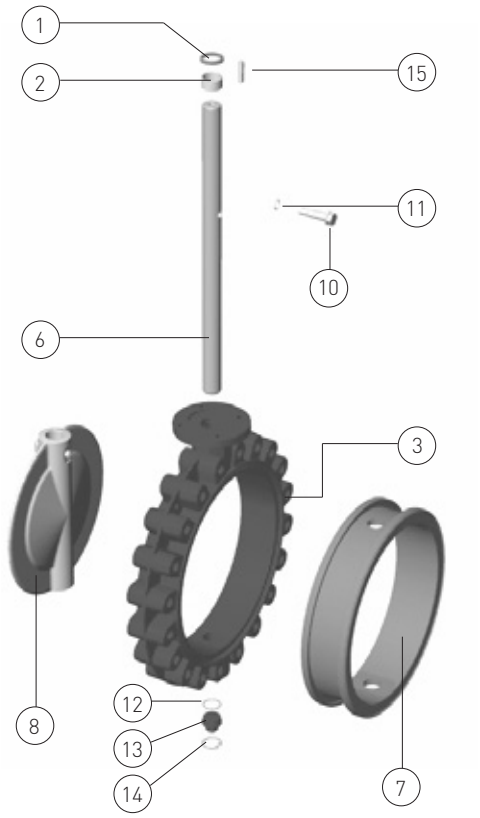

Figure 17 exploded view

PARTS LIST

Part	Name
1.	Dirtscraper
2.	Shaft bushing
3.	Body
4.	Bearing
5.	Split seal
6.	Shaft
7.	Seat
8.	Disc
9.	Body screws
10.	Disc screw
11.	O-ring
12.	O-ring
13.	Plug
14.	Circlip
15.	Key

ACTUATOR SELECTION

Actuator type	Figure	Remark
Handle	F412	Leverlock
	F413	Continuous adjustable
Gear	F455	CM or WM
Pneumatic	F79E	-
Gear/Pneumatic	ILG/D / F79E	Declutchable gearunit provides manual override for the Keystone pneumatic actuator
Electric	F778	-

NOTE

For other actuators and selection, please contact your local sales outlet.

KEYSTONE OPTISEAL WAFER AND LUGGED
VALVE DATA

K_v VALUES

Disc	Size in mm																			
opening	40	50	65	80	100	125	150	200	250	300	350	400	450	500	600	700	750	800	900	1000
10°	-	-	-	-	-	-	-	-	19.5	47.3	119	155	196	242	349	475	545	620	785	969
20°	0.6	0.9	2.4	5.0	9.2	14.8	22.4	53	151	314	304	397	503	621	894	1216	1396	1589	2011	2483
30°	3.8	5.9	11.1	20.4	37.6	66.8	108	204	300	369	637	832	1053	1300	1871	2547	2924	3327	4211	5197
40°	9.2	14.3	26.2	47.4	84.8	143.0	221	392	572	718	1142	1492	1888	2331	3357	4569	5245	5968	7553	9325
50°	18.1	28.3	49.7	87.9	154.0	254.0	381	657	956	1212	1936	2529	3200	3951	5689	7744	8890	10114	12801	15803
60°	33.5	51.6	87.4	151.0	260.0	420.0	621	1050	1540	1993	3110	4062	5141	6347	9140	12440	14281	16248	20564	25384
70°	54.2	88.6	156.0	274.0	471.0	743.0	1062	1731	2628	3624	5010	6544	8288	10224	14723	20040	23005	26174	33127	40897
80°	57.6	111.0	232.0	442.0	789.0	1261.0	1802	2946	4616	6613	8969	11714	14826	18303	26357	35875	41183	46857	59303	73214
90°	58.5	112.0	249.0	492.0	895.0	1444.0	2099	3715	6883	11343	10407	13592	17203	21238	30583	41626	47785	54369	68811	84953

NOTES

1. Rated K_v = the volume of water in m^3/hr that will pass through a given valve opening at a pressure drop of 1 bar.
2. $\mathbf{K_v = Q\sqrt{\frac{R.D.}{\Delta P}}}$ (liquid)

   Q = flow through valve (m^3/hr)

   R.D. = relative density of liquid (water = 1)
3. Values for composite discstem, indication only. For details: contact factory.

DYNAMIC TORQUE FACTORS F_T FOR METRIC UNITS

Disc	Size in mm																			
opening	40	50	65	80	100	125	150	200	250	300	350	400	450	500	600	700	750	800	900	1000
10°	-	-	-	-	-	-	-	-	-	-	-	-	-	-	-	-	-	-	-	-
20°	0.1	0.1	0.2	0.5	0.9	1.8	3.0	7.2	14.1	24.3	21.4	32.0	45.6	62.5	108.0	171.5	210.9	256.0	364.5	500
30°	0.1	0.3	0.6	1.1	2.1	4.1	7.1	16.8	32.8	56.7	64.3	96.0	136.7	187.5	324.0	514.5	632.8	768.0	1093.5	1500
40°	0.3	0.5	1.1	2.1	4.1	8.0	13.8	32.8	64.1	110.7	124.3	185.6	264.3	362.5	626.4	994.7	1223.4	1484.8	2114.1	2900
50°	0.4	0.9	1.9	3.6	7.0	13.7	23.6	56.0	109.4	189.0	235.8	352.0	501.2	687.5	1188.0	1886.5	2320.3	2816.0	4009.5	5500
60°	0.8	1.5	3.3	6.1	12.0	23.4	40.5	96.0	187.5	324.0	415.9	620.8	883.9	1212.5	2095.2	3327.1	4092.2	4966.4	7071.3	9700
70°	1.3	2.5	5.5	10.2	20.0	39.1	67.5	160.0	312.5	540.0	733.2	1094.4	1558.2	2137.5	3693.6	5865.3	7214.1	8755.2	12465.9	17100
80°	2.0	3.9	8.5	15.9	31.0	60.5	104.6	248.0	484.4	837.0	1346.3	2009.6	2861.3	3925.0	6782.4	10770.2	13246.9	16076.8	22890.6	31400
90°	-	-	-	-	-	-	-	-	-	-	-	-	-	-	-	-	-	-	-	-

NOTES

1. Dynamic operating torque formula:

   $\mathbf{T_D = F_T \times \Delta P}$

   T_D = Dynamic torque (Nm)

   ΔP = Pressure drop across disc at desired disc-opening (bar)

   F_T = Dynamic torque factor (see table)
2. The above mentioned dynamic torque includes all frictional resistances.
3. The dynamic torque is tending to close the disc.
4. ΔP to be determined with K_v formula.

MAXIMUM ALLOWABLE SHAFT TORQUES in Nm

	Valve size in mm																			
	40	50	65	80	100	125	150	200	250	300	350	400	450	500	600	700	750	800	900	1000
SS 1.4401	65	65	160	160	160	320	320	545	970	970	-	-	-	-	-	-	-	-	-	-
SS 1.4470	65	65	160	160	160	320	320	655	1160	1160	-	-	-	-	-	-	-	-	-	-
SS 1.4408	32	32	80	80	80	160	160	327	580	580	-	-	-	-	-	-	-	-	-	-
SS 1.4057	90	90	230	230	230	460	460	935	1660	1660	1760	2012	3472	3858	6587	7685	8234	8782	15949	22956
SS 1.4057*	65	65	110	160	160	320	320	935	1660	1660	-	-	-	-	-	-	-	-	-	-
SS 1.4462	70	70	170	170	170	345	345	700	1215	1215	-	-	-	-	-	-	-	-	-	-
Ti**	45	45	105	105	105	210	210	430	760	760	-	-	-	-	-	-	-	-	-	-

* for Composite disc ** Ti = Titanium

NOTES

1. In ISO 5211/2 a table is listed representing the maximum torques which can be transmitted through the actuator flange. These values are based upon specific criteria and can be lower than the maximum allowable shaft torques. In this case the criteria can be changed in order to reach the maximum allowable shaft torques.

KEYSTONE OPTISEAL WAFER AND LUGGED
VALVE DATA

SIZING TORQUES in Nm (STANDARD AND LINED SEAT)

	Size in mm																			
ΔP in bar	**40**	**50**	**65**	**80**	**100**	**125**	**150**	**200**	**250**	**300**	**350**	**400**	**450**	**500**	**600**	**700**	**750**	**800**	**900**	**1000**
I*																				
3,5	10	13	19	26	37	58	81	148	241	345	492	672	889	1146	1789	2625	3123	3679	4654	6138
7	10	13	20	27	40	63	88	164	271	387	559	773	1032	1342	2128	3164	3786	4482	5672	7551
10	11	14	21	30	44	70	99	188	315	451	660	923	1247	1636	2637	3972	4779	5688	7198	9670
14	11	15	23	33	49	80	113	219	374	536	-	-	-	-	-	-	-	-	-	-
16	12	15	25	36	51	85	120	235	403	578	-	-	-	-	-	-	-	-	-	-
II*																				
3,5	11	14	21	29	42	66	93	169	274	392	555	755	994	1276	1976	2880	3416	4011	5076	6658
7	11	14	22	31	45	71	100	185	303	434	623	856	1138	1472	2315	3419	4078	4815	6093	8071
10	11	15	23	33	49	78	111	208	347	498	724	1007	1352	1766	2824	4226	5072	6021	7619	10190
14	12	16	26	36	54	88	125	240	406	583	-	-	-	-	-	-	-	-	-	-
16	12	17	27	38	56	93	132	255	436	626	-	-	-	-	-	-	-	-	-	-
III*																				
3,5	12	15	23	32	48	74	105	190	306	439	619	839	1100	1406	2163	3135	3708	4344	5497	7178
7	12	16	24	34	50	79	112	206	336	481	686	939	1243	1602	2502	3673	4371	5148	6514	8591
10	12	16	26	36	54	86	122	229	380	545	787	1090	1457	1896	3011	4481	5364	6354	8040	10710
14	13	17	28	40	59	96	136	261	439	629	-	-	-	-	-	-	-	-	-	-
16	13	18	29	41	61	101	143	276	468	672	-	-	-	-	-	-	-	-	-	-

SIZING TORQUES in Nm (SUPER SEAT**)

	Size in mm														
ΔP in bar	**40**	**50**	**65**	**80**	**100**	**125**	**150**	**200**	**250**	**300**	**350**	**400**	**450**	**500**	**600**
I*															
10	-	18	28	40	59	95	134	250	412	591	851	1173	1563	2026	3198
14	-	19	30	43	64	104	148	281	471	676	986	1374	1849	2419	3876
16	-	19	31	44	67	109	155	297	501	719	1053	1474	1992	2615	4216
II*															
10	-	20	31	45	67	107	152	281	461	662	947	1298	1721	2221	3879
14	-	21	33	48	72	117	166	313	520	746	1081	1499	2007	2614	4157
16	-	21	34	49	74	121	173	328	549	789	1149	1599	2150	2810	4496
III*															
10	-	27	43	63	96	151	216	396	640	919	1297	1755	2300	2936	4509
14	-	28	45	66	101	161	230	427	699	1004	1432	1956	2586	3329	5187
16	-	28	46	68	103	166	237	443	728	1046	1499	2057	2729	3525	5526

* Application I, II, III

NOTES

1. **Application I:** Water, seawater, lubricating types of hydrocarbons.
   Application II: All other liquid applications and lubricating gasses.
   Application III: Non lubricating and dry media.
2. The charted maximum sizing operating torque is the sum of all friction and resistance for opening and closing of the disc against the indicated pressure differential.
3. The effect of dynamic torque is not considered in tabulation.
4. In sizing operators it is not necessary to include safety-factors.
5. Torque values for application I, II and III are relevant for the temperature range of: 0°C to 80°C, when valve opens at least once a month (for other temperatures, contact factory).

** For limited shaft material selection only.

SUPERSEAT

Suitable for:

- severe vacuum applications
- high line velocities up to 12 m/s for liquids
- Bördel and slip-on flanges
- full rated end-of-line service
- pressure testing during erection and commissioning

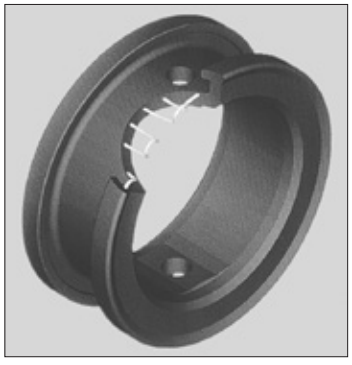

KEYSTONE OPTISEAL WAFER AND LUGGED
MATERIAL SELECTION

			Available trim numbers				
			Body				
Seat	**Disc**	**Shaft**	**Cast iron**	**Cast steel**	**Ductile iron**	**Ductile iron HT**	**Stainless steel**
EPDM	Ductile iron CTD	Stainless steel	677	686	648	692	
	Stainless steel		102	141	112	351	059
	Stainless steel PP		550		578	554	
	Stainless steel SF		104		114	353	
	Stainless steel MP		239		243	373	060
	SS Duplex		339				
	NiAlBz		131	140	135	359	
	EPDM covered		103	311	113	352	
	Hastelloy		593	306	273	383	
	Uranus		287		315	393	
	Composite		430		432		
	Titanium	Titanium	253	569	257	377	
Superseat EPDM	Ductile iron CTD	Stainless steel	697		690	695	
	Stainless steel		343		346	395	
	Stainless steel PP			679		557	
	Stainless steel SF						
	Stainless steel MP		344				
	SS Duplex						
	NiAlBz				347	396	
	Hastelloy		349		348	397	
NBR	Ductile iron CTD	Stainless steel	678	687	673	693	
	Stainless steel		106	145	116	355	
	Stainless steel PP		551			555	
	Stainless steel SF		107		117	356	
	Stainless steel MP		240		244	374	
	SS Duplex		338				
	NiAlBz		133	144	137	360	
	Hastelloy			286	328		
	Composite		431		433		
	Titanium	Titanium	254		258	378	
NBR white	Stainless steel	Stainless steel	169	181	177	361	
	Stainless steel SF		185		189	362	
	Stainless steel MP		241		245	375	
Superseat NBR	Ductile iron CTD	Stainless steel			691		
	Stainless steel		595	596	672	671	
	Stainless steel PP					558	
	Stainless steel SF						
	Stainless steel MP						
	SS Duplex						
	NiAlBz				573	399	
	Hastelloy		342				

NOTES

- All trims, except cast iron bodies, are equipped with two PTFE lined, steel bearings (lead-free; DN 40-300).
- HT = Heat Treated
  PP = Pickled and Passivated
  SF = Satin Finished
  MP = Mirror Polished
  CTD = Epoxy Coated
- If trim number is not listed, contact your local sales outlet.
- For other material combinations, contact your local sales outlet.
- Trims 850 and 851 are 'BrewSeal' trims.

KEYSTONE OPTISEAL WAFER AND LUGGED
MATERIAL SELECTION

			Available trim numbers				
			Body				
Seat	**Disc**	**Shaft**	**Cast iron**	**Cast steel**	**Ductile iron**	**Ductile iron HT**	**Stainless steel**
FKM	Ductile iron CTD	Stainless steel	685	688	689	694	
	Stainless steel		222	230	226	367	
	Stainless steel PP		552			556	
	Stainless steel SF		223	231	227	368	
	Stainless steel MP		242		246	376	
	SS Duplex						
	NiAlBz		224	232	228	369	
	Titanium	Titanium	278		291	384	
PTFE/EPDM	Stainless steel	Stainless steel	186	272	190	363	061
	Stainless steel PP		553	580	587	559	
	Stainless steel SF		187	581	191	364	
	Stainless steel MP		585	582	588	591	879
	Hastelloy		299	579	586	590	
	Uranus		323	584	589	592	
	PTFE lined		188	132	120	365	865
	Titanium	Titanium	256	583	260	379	
XP EPDM	Stainless steel	Stainless steel	730		732	734	
	Stainless steel PP		731		733	735	
	Stainless steel SF						
	Stainless steel MP						
	Stainless steel cast	Stainless steel cast	850				
	Stainless steel MP	Stainless steel cast	851				
	SS Duplex						
	NiAlBz						

NOTES

- All trims, except cast iron bodies, are equipped with two PTFE lined, steel bearings (lead-free; DN 40-300).
- HT = Heat Treated
  PP = Pickled and Passivated
  SF = Satin Finished
  MP = Mirror Polished
  CTD = Epoxy Coated
- If trim number is not listed, contact your local sales outlet.
- For other material combinations, contact your local sales outlet.
- Trims 850 and 851 are 'BrewSeal' trims.

KEYSTONE OPTISEAL WAFER AND LUGGED
VALVE DATA

PRESSURE-TEMPERATURE DIAGRAM (DN 40-300)

Seat material	Disc material	Body material	Size range DN (mm)	Valve function Wafer/End of Line	Temperature in °C -40	-30	-20	-15	0	50	100	120	130	150	160	Notes
EPDM	DI-CTD, SS, SS-Dplx															
	NiAlBz, Hstl, Ur	CI	all	W / EOL	10 bar / 6 bar											5
	DI-CTD, SS, NiAlBz, Hstl, Ur	DI/CS/SS	all	W / EOL	16 bar / 10 bar											6
	SS - SF/MP*, SS-PP	all	all	W / EOL	10 bar / 6 bar											1
	EPDM cover	all	all	W / EOL	10 bar / 6 bar											3
	Titanium	all	all	W / EOL	10 bar / 6 bar											4
	Composite	CI	all	W / EOL	10 bar / 6 bar											27
	Composite**	DI/CS	40 - 150	W / EOL	16 bar / 10 bar											29
Superseat EPDM	DI-CTD, SS, Hstl	CI	all	W / EOL	10 bar / 10 bar											7
	DI-CTD, SS, NiAlBz, Hstl	DI/CS/SS	all	W / EOL	16 bar / 16 bar											8
	SS - SF/MP*, SS-PP	all	all	W / EOL	10 bar / 10 bar											2
NBR and white NBR	DI-CTD, SS, SS-Dplx, NiAlBz	CI	all	W / EOL				10 bar / 6 bar								11
	DI-CTD, SS, NiAlBz, Hstl	DI/CS/SS	all	W / EOL				16 bar / 10 bar								12
	SS - SF/MP*, SS-PP	all	all	W / EOL				10 bar / 6 bar								9
	Titanium	all	all	W / EOL				10 bar / 6 bar								10
	Composite	CI	all	W / EOL				10 bar / 6 bar								28
	Composite**	DI/CS	40 - 150	W / EOL				16 bar / 10 bar								30
Superseat NBR	all	CI	all	W / EOL				10 bar / 10 bar								13
	all (except SS-PP)	DI/CS/SS	all	W / EOL				16 bar / 16 bar								14
FKM	DI-CTD, SS, NiAlBz	CI	all	W / EOL				10 bar / 6 bar					[1]			17
	DI-CTD, SS, NiAlBz	DI/CS/SS	all	W / EOL				16 bar / 10 bar					[2]			18
	SS - SF/MP*, SS-PP	all	all	W / EOL				10 bar / 6 bar					[1]			15
	Titanium	all	all	W / EOL				10 bar / 6 bar					[1]			16
PTFE/EPDM	SS, Hstl, Ur	CI	all	W / EOL			10 bar / 6 bar					[1]	[3]			23
	SS, Hstl, Ur	DI/CS/SS	all	W / EOL			16 bar / 10 bar					[2]	[1]			24
	PTFE lined	CI	all	W / EOL			6 bar / 4 bar					[3]	[4]			19
	PTFE lined	all	all	W / EOL			10 bar / 6 bar					[1]	[3]			20
	SS - SF/MP*, SS-PP	all	all	W / EOL			10 bar / 6 bar					[1]	[3]			21
	Titanium	all	all	W / EOL			10 bar / 6 bar					[1]	[3]			22
XP EPDM	SS	CI	all	W / EOL				10 bar / 6 bar								25
	SS	DI/CS/SS	all	W / EOL				16 bar / 10 bar								26
	SS-PP	all	all	W / EOL				10 bar / 6 bar								31

* Size DN 300 max 6 bar

** Size DN 200 - 300: W/EOL 10 bar/6 bar

1. 6 bar / 4 bar
2. 10 bar / 6 bar
3. 4 bar / 2 bar
4. 2 bar / 1 bar

SS = Stainless steel, CI = Cast iron, DI = Ductile iron, CS = Carbon steel

PRESSURE-TEMPERATURE DIAGRAM (DN 40-300)

Notes	Trims
1	060 104 114 239 243 353 373 550 554 578
2	344 557 679
3	103 113 311 352
4	253 257 377 569
5	102 131 287 339 593 677
6	059 112 135 140 141 273 306 315 359 383 393
	648 686 692 884
7	343 349 697
8	346 347 348 396 397 690 695
9	107 117 185 189 240 244 374 241 245 356 362 375 551 555
10	254 258 378
11	106 133 169 338 678
12	116 137 144 145 177 181 286 328 355 360 361 673 683 687
	693 696
13	342 595
14	399 573 596 671 672 691

Notes	Trims
15	223 227 231 242 246 368 376 552 556
16	278 291 384
17	222 224 685
18	226 228 230 232 367 369 688 689 694
19	188
20	120 132 365 865
21	187 191 364 581 582 585 588 591 879
22	256 260 379 583
23	186 299 323 553
24	061 190 272 363 559 579 580 584 586 587 589 590 592
25	730 850 851
26	732 734
27	430
28	431
29	432
30	433
31	731 733 735

MATERIAL SPECIFICATION (DN 40-300)

Part name	Material	Designation	EN/DIN mat.no	Remark
Body	Cast iron	GJL-250	EN JL-1040	Max. pressure 10 bar
	Cast steel	GP240GH	EN 1.0619	
	Ductile iron	GJS-400-15	EN JS-1030	
	Ductile iron Heat Treated	GJS-400-18U-LT	EN JS-1049	With heat treatment certificate and Charpy V-notch test
	Stainless steel	GX5CrNiMo19-11-2	EN 1.4408	Wafer style DN 50-300 investment cast
Disc	Ductile iron CTD	GJS-400-15	EN JS-1030	CTD = Epoxy coated max temp 120°C
	Duplex	GX2CrNiMoN22-5-3	EN 1.4470	
	Hastelloy C4C	ASTM A494 CW2M	-	Shaft connection by welded pins
	NiAlBz	CuAl10Fe5Ni5	EN CC333G	Comparable with BS 1400 AB2
	Stainless steel	GX5CrNiMo19-11-2	EN 1.4408	Comparable with CF8M
	Stainless steel PP	GX5CrNiMo19-11-2	EN 1.4408	All sizes
	Stainless steel MP	GX5CrNiMo19-11-2	EN 1.4408	DN 40-250 max 10 bar, DN 300 max. 6 bar
	Stainless steel SF	GX5CrNiMo19-11-2	EN 1.4408	DN 40-250 max 10 bar, DN 300 max. 6 bar
	EPDM covered steel			Max. 10 bar 120°C
	PTFE covered steel			Max. 10 bar
	Composite			DN 40-300 Engineered composite XP1620
	Titanium	Ti3	DIN 3.7055	Comparable with ASTM B265/ASTM B348 grade 2, max. 10 bar
	Uranus (B6)	G-X 2 NiCrMoCuN 25 20	DIN 1.4536	Casting quality (SEW 410) or 1.4539
Shaft	Stainless steel	X5CrNiMo17-12-2	EN 1.4401	Standard shaft material
	Stainless steel	X17CrNi16-2	EN 1.4057	Similar to ASTM A276/Gr. 431. Used for DI, DI-CTD and Composite disc
	Stainless steel	GX5CrNiMo19-11-2	EN 1.4408	Comparable with CF8M for mirror polished and satin finished disc
	Duplex	X2CrNiMoN22-5-3	EN 1.4462	For EPDM, PTFE covered, Hastelloy, Uranus disc
	Duplex	GX2CrNiMoN22-5-3	EN 1.4470	For Duplex disc
	Titanium	Ti3	DIN 3.7055	Comparable with ASTM B348 grade 2
Seat	EPDM			Food grade
	Superseat EPDM			Seat reinforced with metal insert food grade
	NBR			Food grade
	Superseat NBR			Seat reinforced with metal insert food grade
	NBR white			Food grade
	FKM			
	PTFE lined EPDM			
	XP EPDM			Food grade
	EPDM WA-3			KIWA
Body screws	Steel			Quality 8.8
	Stainless steel			Optional
Bushing	Polyactetal			
Dirt scraper	NBR/Steel			
Bearing	PTFE lined			Standard in CS, SS, DI and DI HTC body
Split-seal	Graphite			

KEYSTONE OPTISEAL WAFER AND LUGGED
MATERIAL SPECIFICATION

PRESSURE-TEMPERATURE DIAGRAM (DN 350-1000)

Seat material	Disc material	Body material	Size range DN (mm)	Valve function Wafer/End of Line	Temperature in °C -40	-30	-20	-15	0	50	100	120	130	150	160	Notes
EPDM	all	DI/CS	all	W / EOL	10 bar / 6 bar											35
Superseat EPDM	all	DI/CS	350-600	W / EOL	16 bar / 10 bar											37
NBR and white NBR	all	DI/CS	all	W / EOL				10 bar / 6 bar								39
Superseat NBR	all	DI/CS	350-600	W / EOL				16 bar / 10 bar								41
PTFE/EPDM	SS, Hastelloy	DI/CS	350-400	W / EOL		10 bar / 6 bar						[1]	[2]			45
XP EPDM	all	DI/CS	all	W / EOL		10 bar / 6 bar										43

NOTES

1. 6 bar / 4 bar
2. 4 bar / 2 bar

SS = Stainless steel, DI = Ductile iron, CS = Carbon steel

PRESSURE-TEMPERATURE DIAGRAM (DN 350-1000)

Notes	Trims						
35	112	135	139	140	141	633	646
37	346	347	-	-	-	-	-
39	116	137	143	144	145	634	649
41	573	672	-	-	-	-	-
43	732	-	-	-	-	-	-
45	190	586	-	-	-	-	-

MATERIAL SPECIFICATION (DN 350-1000)

Part name	Material	Designation	EN/DIN mat.no	Remark
Body	Cast steel	GP240GH	EN 1.0619	
	Ductile iron	GJS-400-15	EN JS-1030	
	Ductile iron Heat Treated	GJS-400-18U-LT	EN JS-1049	With heat treatment certificate and Charpy V-notch test
	Stainless steel	GX5CrNiMo19-11-2	EN 1.4408	
Disc	Ductile iron CTD	GJS-400-15	EN JS-1030	CTD = Epoxy coated max temp 120°C
	Ductile iron	GJS-400-15	EN JS-1030	
	NiAlBz	CuAl10Fe5Ni5	EN CC333G	Comparable with BS 1400 AB2
	Stainless steel	GX5CrNiMo19-11-2	EN 1.4408	Comparable with CF8M
	Stainless steel PP	GX5CrNiMo19-11-2	EN 1.4408	
	Stainless steel MP	GX5CrNiMo19-11-2	EN 1.4408	Optional
	Stainless steel SF	GX5CrNiMo19-11-2	EN 1.4408	Optional
	EPDM covered steel			Max. 10 bar 120°C. Optional up to DN 400
	Ebonite covered DI			Ductile Iron disc with Ebonite hard rubber lining
	Other materials			Duplex, Hastelloy, Uranus on request
Shaft	Stainless steel	X17CrNi16-2	EN 1.4057	Similar to ASTM A276/Gr. 431. Standard shaft material for DN 350-900
	Duplex	X2CrNiMoN22-5-3	EN 1.4462	For EPDM, PTFE covered, Hastelloy, Uranus or Duplex disc
Seat	EPDM			Food grade
	Superseat EPDM			Seat reinforced with metal insert food grade, max DN 600
	NBR			Food grade
	Superseat NBR			Seat reinforced with metal insert food grade, max DN 600
	NBR white			Food grade
	PTFE lined EPDM			DN 300, DN 400, DN 500 (DN 600 on request)
	XP EPDM			Food grade
	EPDM WA-3			KIWA
Disc screw	Stainless steel	X2CrNiMoN22-5-3	EN 1.4462	
Disc screw O-ring	NBR			
Plug	Carbon steel	C45-QT	EN 1.0503QT	
Plug O-ring	NBR			
Circlip	Springsteel			According DIN 472
Bushing	Polyactetal			
Dirt scraper	NBR/Steel			