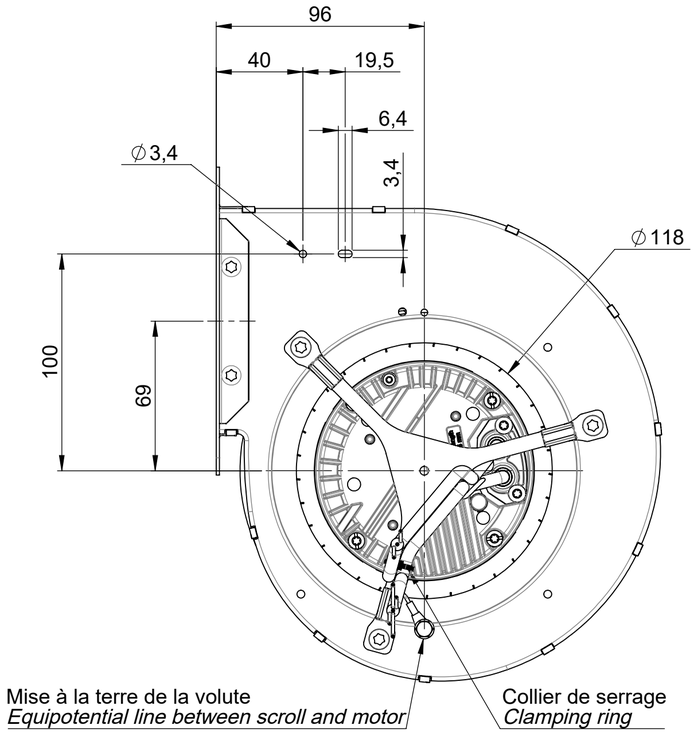

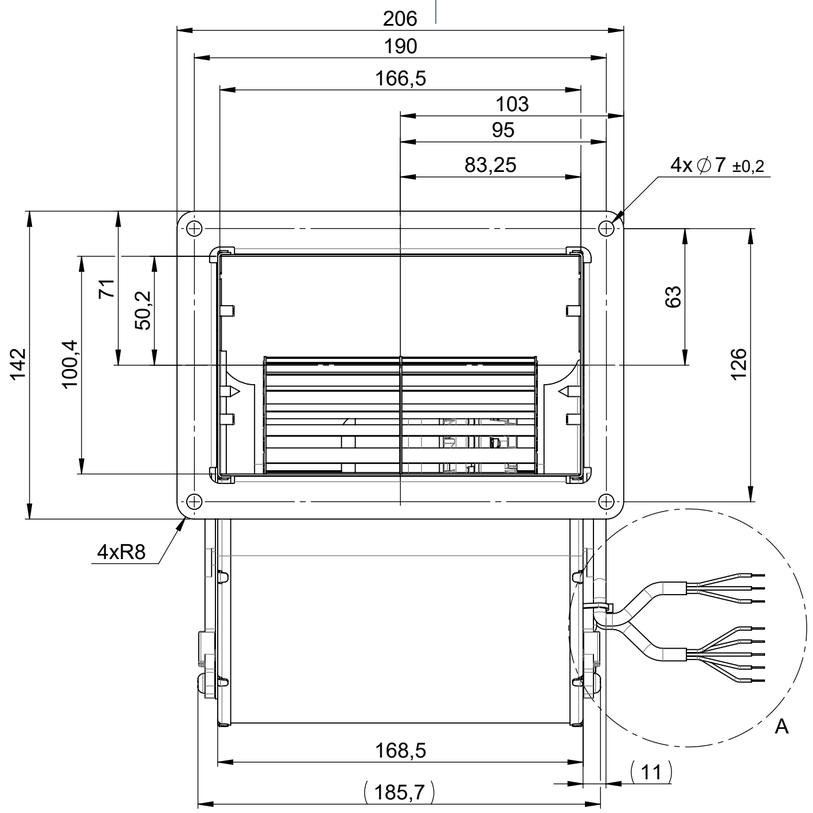

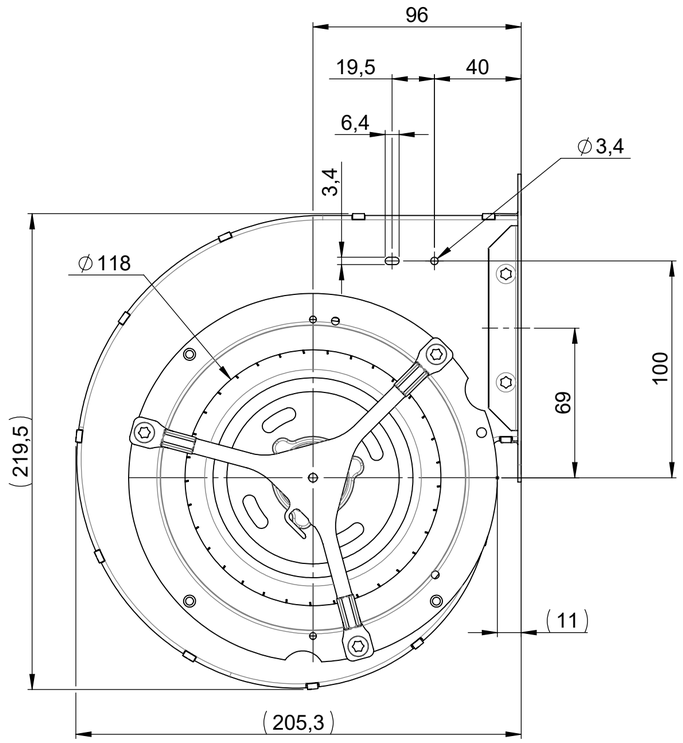

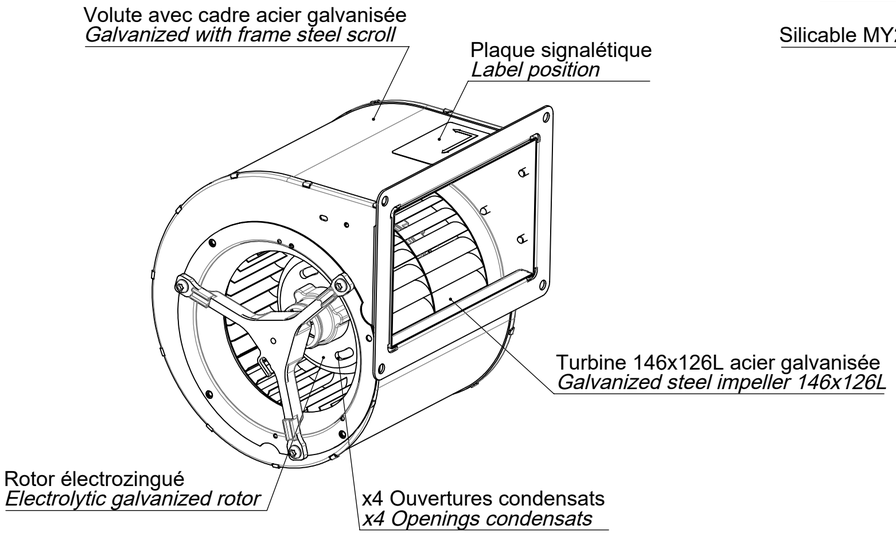

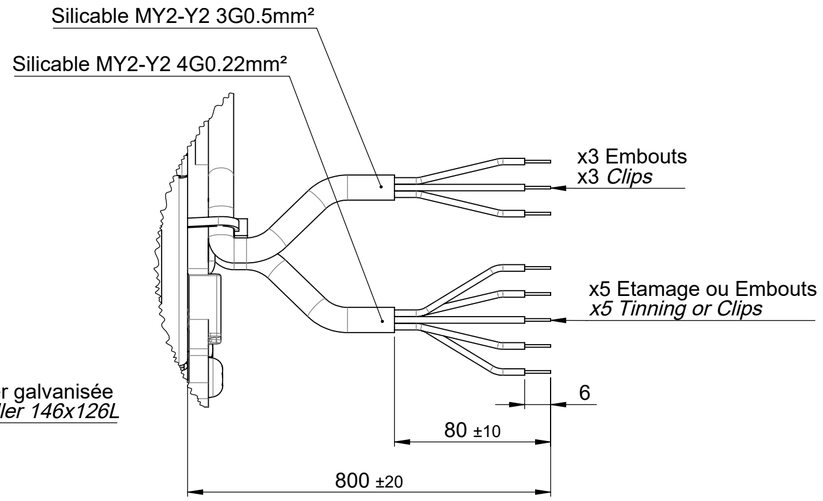

DÉTAIL A
ECHELLE 1 : 1

INDICE	DATE	LIBÉLLÉ	AUTEUR
0	30/06/2026	Creation	TBT

Format A2	Folio 1/1	Drawing by: TBT	Checked by: SLT	ISO	Datasheet EV.EC.025
Scl. 1:2		30/06/2026	General tolerances: ±2mm		This drawing can be modified only with CAD system

DOUBLE INLET CENTRIFUGAL FAN
MOTO VENTILATEUR
GDSG9 146x126L

rosenberg THE A R MOVEMENT GROUP VENDÔME

SolidWorks 2021

This Document is the property of ECOFIT and all reproduction, even partial in any form whatsoever is strictly forbidden without written authorization

N° B06-L1-1

Revision: 0