

Chat with us

Beam Load Cell BL (BL-Ex)

Robust digital beam load cell in a hygienic (aseptic) design for dynamic weighing, process weighing, filling, packaging and general weighing in food, pharma and life science applications. The new hygienic EHEDG compliant design in stainless steel is without gaps or edges for easy cleaning in order to minimize the risk of bacteria growth. The BL/BL-Ex load cell is OIML and NTEP certified and certified for installation in ATEX (Ex) and IECEx environment in Zone 1, 2, 21 and 22.

Type:	BL (Non-ATEX) BL-Ex (ATEX)
Capacity (Emax):	10, 20, 30, 50, 100, 150, 250, 500, 1000 kg
Accuracy:	Industrial 0.10%, Precision 0.05%, High Precision 0.025%
Overload Tolerance:	500% at 5kg, 200% at 1000 kg capacity

Special Features

Developed and manufactured in Denmark

Hygienic (aseptic) design without gaps or edges for easy cleaning to minimize the risk of bacteria growth

High tolerance of up to 1,000% overload

Robust capacitive technology

Hermetically sealed to IP68

Electropolished stainless steel 1.4542 (17-4 PH)

ATEX and IECEx certified (Zone 1, 2, 21, 22)

Withstands welding voltages and ESD

High accuracy, high resolution

Capacity (Emax): 10, 20, 30, 50, 100, 150, 250, 500, 1000 kg

Accuracy: Industrial 0.10%, Precision 0.05%, High Precision 0.025%

Load cell cable length up to 100 meters

Load cell calibration independent of cable length

Replaceable load cell cable

Easy mechanical and electrical installation

OIML and NTEP approvals

Chat with us

Dimensions (mm)

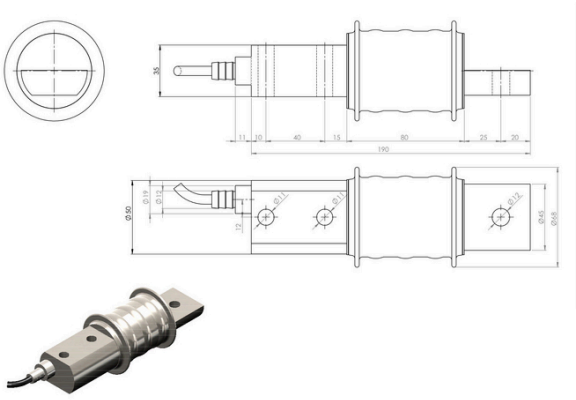

Specifications

Parameter	Unit	0.10%	0.05%	0.025%*
Rated capacity (E_{max})	kg	10, 20, 30, 50, 100, 150, 250, 500, 800, 1000		
Safe overload limit	% of E_{max}	200 to 1000		
Safe sideload limit	% of E_{max}	300 to 1000		
Combined Accuracy	% of E_{max}	0.100	0.050	0.025
Repeatability	% of E_{max}	0.018	0.015	0.010
Hysteresis	% of E_{max}	0.033	0.025	0.017
Creep 30 min.	% of E_{max}	0.035	0.025	0.017
Temperature effect on zero	% of E_{max}	0.050	0.035	0.035
Temperature effect on sensitivity	% /10°C	0.050	0.035	0.035
Compensated temperature range	°C	-10 to 50		
Operating temperature range	°C	-40 to +70 (100**)		
Deflection at E_{max}	mm	0.20		
Measuring rate	Hz	500		
Supply	Vdc	24Vdc ±5%		
Internal resolution	Bit	24		
Material		Stainless Steel 17-4 PH and AISI 316		
Protection		IP68		
Cable		6 meter standard coaxial RG-58 (Ø6mm) with BNC connector		
Maximum cable length	m	100		
Weight	kg	2.0		
Output options		EtherNet/IP, PROFINET, EtherCAT, Profibus DP, Modbus TCP/IP, DeviceNet, RS485, 4-20mA, 0-10Vdc		

Chat with us

* Higher accuracies available on request up to C4

** Only for non-ATEX and with Teflon load cell cable

Applications

Dynamic weighing

Process weighing

Tanks and vessels

Vibration sorters

Filling and dosing

Platform scales

Packaging machines

Hopper scales

Belt scales

Conveyor scales

Big-bag equipment

On-board weighing

Options

ATEX and IECEx (Zone 1, 2, 21, 22) version type BL-Ex

ATEX II 2G Ex ia IIC T6 Gb / ATEX II 2D Ex IIIC T85°C Db

Mounting kits available

Load cell cable length 10, 20, 50 or 100 meters

Mud resistant and Halogen free cables for offshore installation

Special PE load cell cable available for freezing low temperature (can be used down to -50 degrees Celsius)

Special Teflon load cell cable available for very high temperature (can be used up to 100 degrees Celsius)

Chat with us

Copyright © 2026 Eilersen / Cookie policy / Privacy policy / Disclaimer and Legal information