G015547

Gas detector
ST450 EC

Part no. 5150129-5150142

System: CGD50/500, CGS50/500

General description

- The ultimate gas detector that ensures safety
- ATEX / IECEx approved
- Cost saving, no zener barrier required for Ex applications
- Allowed in Ex zones 1 and 21
- Touch screen experience, control without additional tools
- Self-diagnostics
- Reliable sensor technology
- Splashguard included

The ST450 EC is an all-round gas detector which functions well under the most difficult circumstances. The heart of the detector is a replaceable gas sensor, which is available for Oxygen and toxic gases. The measuring principle is based on an electrochemical sensor, which is developed to meet the highest standards. The sensor has an outstanding stability, which achieves long-term reliability. The high selectivity of the sensors minimalizes "false" readings.

The ST450 EC comes as standard with a graphic display. The display shows the measured value and various status notifications locally. The display is also equipped with backlight allowing easy and simple control in dark areas. The capacitive key control gives you an experience similar to a touchscreen and enables easy navigation through the user/calibration menu.

The user menu is secured with a password; unauthorized users cannot access the gas detector. The control of the user/calibration menu does not require additional tools (for example magnets). Simple, easy and user friendly! The user menu provides different features, such as a zero and span calibration, adjusting alarm set points (local alarm indication through notifications on the display and bright colored LED), showing set points, diagnostic information and simulation of the output signal (4-20 mA) for loop testing.

The ST450 EC is Ex d and Ex t approved (ATEX and IECEx). This makes the sensor an all-round gas detector and useful in GAS and DUST zones. The gas detector can be used in Ex applications (zone 1/2 and 21/22). without having a zener barrier. This reduces investment costs directly.

Applications

- Wastewater plants
- Refineries
- Confined spaces
- Food industry
- Marine
- Silo storage
- Steel industry

Data

Gas type	Oxygen, Hydrogen sulfide, Carbon monoxide, Hydrogen
Sensor type	Electrochemical sensor (2 or 3 electrodes)
Range	Oxygen (O_2), 0-25 Vol.% Hydrogen sulfide (H_2S), 0-30 / 50 / 100 ppm Carbon monoxide (CO), 0-500 ppm Hydrogen (H_2), 0-1000 ppm / 0-100 %LEL
Display	Digital graphic display with backlight
Status LED display	Green: OK Red: Alarm Yellow: SF (System Failure)
Power supply	17.5-24 V DC (max. 25 mA)
Outputs	4-20 mA, RS485 Modbus RTU (half-duplex) 2 mA system failure, >20 mA over range
Signal cable	2-wire shielded, 0.75 - 2.5 mm^2
Cable gland	Aluminium housing: Brass / SS housing SS (thread M20x1.5)
Load impedance	Max. 300 Ω at 24 V DC
Operating temperature	See table in the Ordering Information section of this data sheet.
Ingress protection	Enclosure: IP66[1] Sensor: IP6X
Relative humidity	See table in the Ordering Information section of this data sheet.
Pressure range	Toxic: Atmospheric ± 10% Oxygen: 80 to 120 kPa
Enclosure	Aluminium with coating, optional SS
Dimensions (H × W × D)	179 × 189 × 107 mm
Weight	1.5 kg ± 5% (Al) 2.6 kg ± 5% (SS)
Enclosure gas sensor	SS 316
Certification	ATEX - Ex (Directive 2014/34/EU) Electromagnetic Compatibility (Directive 2014/30/EU)
ATEX approvals	I 2G Ex d IIC T6 Gb II 2D Ex tb IIIC T85°C Db
IECEx approvals	Ex d IIC T6 Gb Ex tb IIIC T85°C Db

Ordering Information

Gas detector					
Type	**Range**	**Part no.**		**Operating temperature**	**Relative humidity**
		Aluminium	**Stainless Steel**		
ST450 EC-O_2	0-25 Vol.%	5150129-00A	5150130-00A	-20 °C to +55 °C	5-95% RH (n.c.)
ST450 EC-H_2S	0-30 ppm	5150131-00A	5150132-00A	-20 °C to +50 °C	5-90% RH (n.c.)
ST450 EC-H_2S	0-50 ppm	5150133-00A	5150134-00A	-20 °C to +50 °C	15-90% RH (n.c.)
ST450 EC-H_2S	0-100 ppm	5150135-00A	5150136-00A	-20 °C to +50 °C	15-90% RH (n.c.)
ST450 EC-CO	0-500 ppm	5150137-00A	5150138-00A	-20 °C to +50 °C	15-90% RH (n.c.)
ST450 EC-H_2	0-1000 ppm	5150139-00A	5150140-00A	-20 °C to +40 °C	15-95% RH (n.c.)

1) IP ratings do not imply that the equipment will detect gas during and after exposure to those conditions.

Gas detector					
Type	**Range**	**Part no.**		**Operating temperature**	**Relative humidity**
		Aluminium	**Stainless Steel**		
ST450 EC-H_2	0-100 %LEL	5150141-00A	5150142-00A	-20 °C to +40 °C	15-95% RH (n.c.)

Accessories		
Type	**Part no.**	**Description**
Signal cable	5150223-00A	2 core shielded cable, 2×0.75 mm^2 (flexible cores), per metre
Duct mounting set	5150229-00A	Duct mounting set for mounting in ventilation ducts
Splash guard	5150227-00A	Sensor protection against splash water
Inline flow adapter	5150228-00A	Inline flow adapter for sample applications, connection 2×6 mm, SS
Protective hood	5150226-00A	Protective hood SS, for optimal protection in "wet" protection areas, dim. 315×300×138 mm
Isolation set EMC/RFI	5150231-00A	Isolation board, 160×160 mm
Protective bracket	5150225-00A	SS bracket, extra protection for use in warehouses

Spare parts / consumables			
Spare gas sensor	**Part no.**	**Range**	**Description**
BUSENS D, type O_2	5150234-00A	0-25 Vol.% O_2	Oxygen sensor
BUSENS D, type H_2S	5150235-00A	0-30 ppm H_2S	Hydrogen sulfide sensor
BUSENS D, type H_2S	5150236-00A	0-50 / 100 ppm H_2S	Hydrogen sulfide sensor
BUSENS D, type CO	5150237-00A	0-500 ppm CO	Carbon monoxide sensor
BUSENS D, type H_2	5150238-00A	0-1000 ppm H_2	Hydrogen ppm sensor
BUSENS D, type H_2	5150239-00A	0-100 %LEL H_2	Hydrogen LEL sensor

Mounting

Mount the detector in a vertical position, with the sensor pointing downwards.

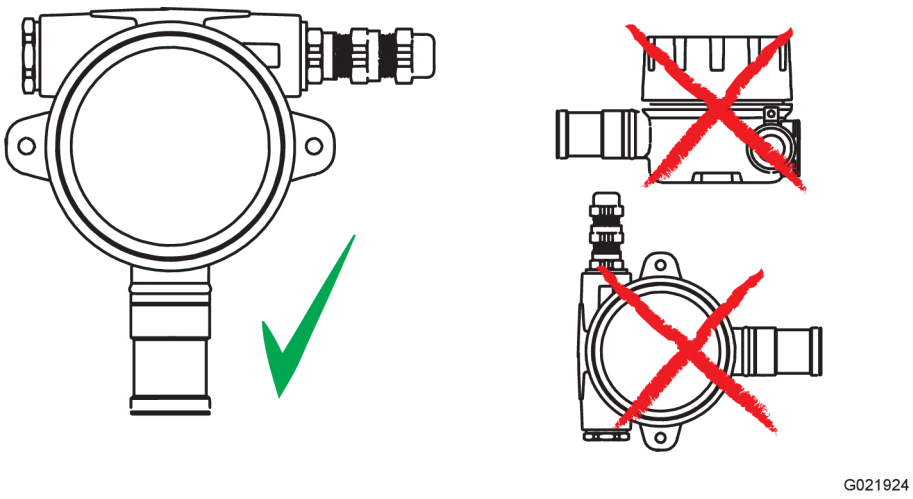

Connections

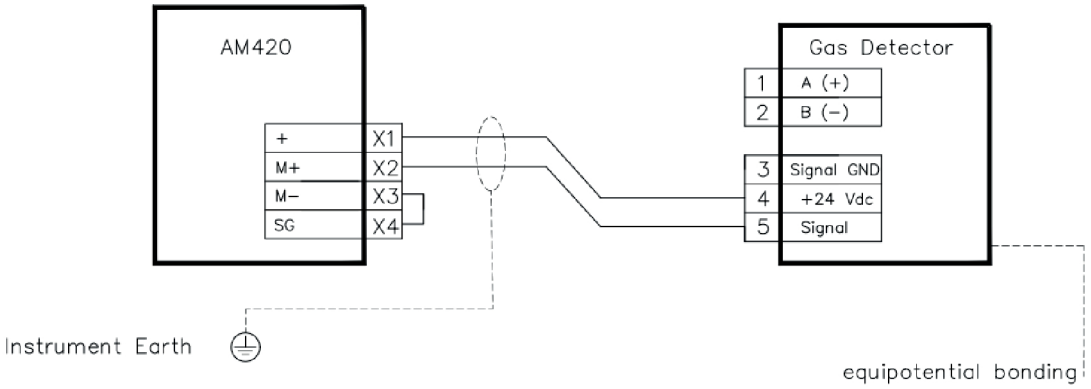

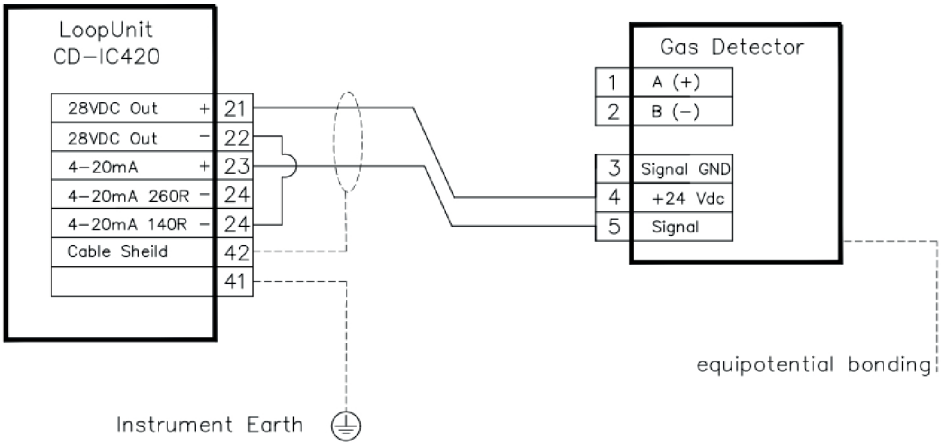

G015535

Dimensions (mm)

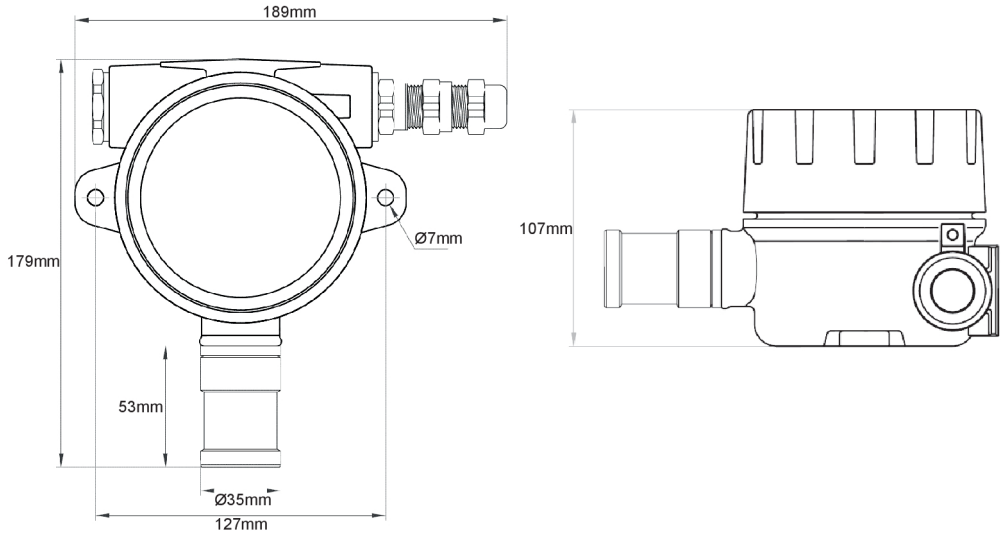

G015529