REOVIB

Operating Instructions

Control Units for Vibratory Feeding Technology

MFS 368

Frequency Converter for Vibratory Feeders

MFS368_ANL_rev08.en
25.08.2026

Table of Contents

Safety Instructions for the User **3**
Applied Guidelines and harmonized Standards **12**
Changes and Copyright **12**
1.0 General **13**
2.0 Function **14**
2.1 Track Control 15
2.2 Operation with two Conveying Speeds (2nd Setpoint for Coarse/Fine Changeover) 16
2.3 Control Inputs and Outputs 16
2.3.1 Enable Input 16
2.3.2 Sensor Input for Track Control 16
2.3.3 External Setpoint 16
2.3.4 Control output Status Relay 17
2.3.5 Control Output 24 V DC „Time-Out“ (IP 54) 17
2.3.6 Ready Relay (IP 20) 17
2.3.7 Control Output 24 V DC - Air Valve (IP 54) 17
2.3.8 Thermal Switch (Series) 17
2.4 Touch Panel 18
3.0 Construction **19**
3.1 IP 54 Version 19
3.2 IP 20 Version 19
4.0 Technical Data **20**
4.2 Terminal Details 21
4.3 Temperature of the Protective Housing 21
4.4 Coolant Type 21
4.5 Current Consumption 21
5.0 Ordering Codes **22**
5.1 Control Connections (depending on Unit Version) 23
5.2 Range of Functions (depending on Unit Version) 23
6.0 Configurable Functions **24**
7.0 Operating Elements **26**
7.1 Adjustment Behavior 26
7.1.1 Example Parameter Configuration 27
7.1.2 External Setpoint Example 27
8.0 Commissioning **28**
8.1 Preparatory Measures 28
8.2 Operating Frequency of the Feeder Magnets 29
8.3 Measurement of Output Voltage and Output Current 29
9.0 Settings **30**
9.1 Notes on Operation in Control Mode 30
9.2 Mounting the Acceleration Sensor 30
9.3 Correlation between Acceleration and Vibration Amplitude 32
9.4 Determining the Resonant Frequency 32
9.5 Commissioning of the Controller in Control Mode 33
9.5.1 Automatic Frequency Search and Control Mode (AFC) 33
9.5.2 Automatic Frequency Scan (AFS) 34
10.0 Troubleshooting **35**
11.0 Connection of the Enclosure Version (Configuration-dependent) **36**
12.0 Connection of Control Cabinet Version **38**
13.0 Dimension Drawing **39**
14.0 Installation Instructions **40**
A 1.0 Accessories / Options / Spare Parts **43**

Safety Instructions for the User

Important Note!

READ CAREFULLY BEFORE USE AND KEEP FOR FUTURE REFERENCE

These instructions contain all the information required for the proper use of the products described. They are intended exclusively for qualified personnel.

Qualified personnel are persons who, due to their professional training, experience, and instruction in the specific field of drive and electrical engineering, as well as their knowledge of relevant standards, regulations, accident prevention regulations, and operational procedures, have been commissioned by the operator to perform the necessary tasks. These persons must be able to recognize potential dangers and implement appropriate protective measures. Definition of qualified personnel is contained in VDE 1000-10; DIN EN 50110-1 (VDE 0105-1).

It must be ensured that all basic planning work on the machine or system, as well as all activities related to transport, assembly, installation, commissioning, maintenance, and repair, are carried out by qualified personnel or supervised by appropriately responsible specialists.

The following points in particular must be observed:

Safety Instructions for Assembly and Commissioning

The following instructions must be observed during all work related to assembly, installation, commissioning, maintenance, and repair:

- **Compliance with technical data and permissible areas of application**, as specified in catalogs, order documents, type plates, and product labels, for example.
- **Observe general installation and safety regulations**, in particular the applicable standards (e.g., VDE regulations, DIN standards) and legal requirements.
- **Take local and system-specific requirements into account**, in particular with regard to electrical protective measures, ambient conditions, and access regulations.
- **Professional use of suitable tools and lifting and transport equipment** to prevent damage and dangers.
- **Use of personal protective equipment (PPE)** in accordance with the applicable occupational safety regulations.
- **Compliance with the specified installation conditions**, in particular:
  - Ensuring the necessary protection against contact during operation,
  - Protection against electric shock caused by unintentional touch (e.g., covers).

General safety instructions

The following instructions are intended to protect the operating personnel and ensure the safety of the products described and all connected units.

Compliance with these safety instructions is essential to prevent injury to persons and damage to property and to ensure safe, standard-compliant operation.

DANGER! Extreme danger to life.

WARNING! Moderate danger, serious injury or damage.

CAUTION! Minor danger, minor damage or malfunction.

ATTENTION! Hot surface.

Warning: Improper handling of electrical energy can result in property damage, serious personal injury, or fatal accidents.

DANGER!

Dangerous voltage. Risk of fatal electric shock!

Safety measures:

- Disconnect all power supplies before performing any installation, removal, fuse replacement, or maintenance work.
- Observe accident prevention and safety regulations, in particular the legal and company regulations applicable at the place of use.
- Before commissioning, check whether the rated voltage of the unit corresponds to the local mains voltage.

DANGER!

Danger to life due to electric shock if not grounded

In units of protection class I, a missing or faulty protective conductor connection can lead to dangerous contact voltage on conductive, accessible parts of the unit – especially on the housing. Touching these parts can cause serious or fatal electrical shock.

Safety measures:

- Ensure that the unit is properly grounded.
- After installation, check all protective conductor connections, especially for continuity and mechanical integrity.

DANGER!

Danger of death from electric shock if units are damaged

Damaged electrical units can cause dangerous contact voltage on housing parts or exposed electrical components. Touching these parts can cause serious injury or fatal electrical shock.

Safety measures:

- Observe the limits for transport, storage, and operation as specified in the technical data.
- Do not use damaged units.

DANGER!

Danger to life due to electric shock if the cable shield is not connected

Cable shields that are not connected can generate dangerous contact voltages due to capacitive coupling. Contact with conductive parts of the unit can cause serious injury or fatal electrical shock.

Safety measures:

- Connect cable shields and unused wires of power cables to a grounded housing potential on at least one side.

DANGER!

Danger to life due to electric arcs when disconnecting a plug connection during operation

Disconnecting a plug connection while it is live can cause an electric arc to form. This can result in serious injury or fatal electrical shock if contact is made.

Safety measure:

- Ensure plug connections are disconnected only when power is off.

DANGER!

Danger of death due to electric shock when the housing is open.

After disconnecting the unit from the mains, dangerous residual voltages may be present on capacitors inside the unit. Contact with live components can result in serious injury or fatal electrical shock.

Safety measures:

- Disconnect the unit from the mains before opening (by isolating and removing the mains plug).
- Wait at least **5 minutes** after disconnecting from the mains to allow all capacitors to discharge completely.

WARNING!

Danger to persons with active implants due to electromagnetic fields

Frequency converters generate electromagnetic fields (EMF) during operation, which can impair or interfere with the function of active implants (e.g., pacemakers or defibrillators). Persons with such implants are exposed to a significant health risk in the immediate vicinity of the units.

Safety measure:

- As the operator of an EMF-emitting system, assess the individual risk to persons with active implants.

WARNING!

Risk of uncontrolled restart due to power interruption

Interrupting and restoring the power supply to the control unit can lead to hazardous situations. In particular, once the power supply has been restored, the system can restart without additional enabling.

Safety measures:

- Inform the operating personnel of the possible dangers of restarting.

WARNING!

Danger due to automatic restart after power restoration

Interruption and subsequent restoration of the power supply can lead to dangerous situations. In particular, there is a risk that the system will automatically restart without additional release. This can result in personal injury or property damage.

Safety measures:

- Ensure that the system cannot restart automatically after a power failure.
- Suitable technical measures must be taken to reliably prevent unintentional restarting, e.g. emergency stop.
- The effectiveness of the emergency stop function must be checked before initial commissioning and regularly during operation. The check must be documented and carried out by qualified personnel.

WARNING!

Danger due to missing or illegible warning signs

Incomplete, damaged, or illegible warning signs can prevent potential dangers from being recognized. This can lead to serious accidents resulting in injury or even death.

Safety measures:

- Ensure that all warning signs are in perfect condition and clearly legible.
- The signs must clearly indicate any dangers and be able to withstand the conditions in which they are used.
- Missing, damaged, or illegible warning signs must be replaced immediately.
- For more information, refer to the **section 4.1 “Warning signs”.**

WARNING!

Risk of injury from hot surfaces

In the event of malfunctions, overload, or insufficient ventilation, components inside the unit may become very hot. Contact with these surfaces may result in burns.

For versions with **6 A** and **8 A**, the heat sink temperature may reach up to **70 °C** during operation.

Safety measures:

- Ensure that adequate cooling and air circulation is maintained at all times.
- Avoid contact with internal components during and immediately after operation.
- Use suitable warning signs to indicate hot surfaces (e.g., warning sign in accordance with ISO 7010 W017).
- Internal access to the unit is limited to authorized, qualified personnel only.

CAUTION!

Danger due to improper installation

Improper installation work – e.g. due to unsuitable tools, faulty screw connections or failure to observe the installation instructions – can cause components or the entire unit to fail or become faulty. This poses a considerable risk to people and property.

Safety measures:

- Wear suitable personal protective equipment (PPE) during all assembly and disassembly work, e.g.:
  - Safety shoes (at least class S1),
  - Safety helmet,
  - Protective gloves.
- Follow all instructions in the assembly instructions carefully.
  Only use the recommended tools and tightening procedures (e.g., torque specifications).

CAUTION!

Safety impairment due to unintentional parameterization

Unintentional or unauthorized changes to unit settings can lead to the deactivation or restriction of safety-related functions. This can endanger persons or cause damage to the system.

Safety measures:

- Ensure that safety-critical parameters can only be changed by authorized personnel.
- Document all changes to safety-related parameters in a traceable manner.

CAUTION!

Property damage due to loose power connections

Inadequately secured power connections, for example due to incorrectly tightened screws or operational vibrations, can lead to increased contact resistance. This can result in overheating, unit malfunctions, or a fire danger.

Safety measures:

- Tighten all power connections to the tightening torques specified in the technical documentation.
- Use only suitable tools to tighten the connections.
- Check all power connections regularly to ensure they are secure – especially after transport, commissioning, or maintenance work.

CAUTION!

Damage to the unit due to exceeding the permissible current consumption

The value for the max. input current specified in the technical data represents the maximum permissible input current for the unit over the entire permissible input voltage range. Exceeding this value can lead to malfunctions, damage to components, or total failure of the unit. See also **section 4.5** "**Current consumption**".

Safety measures:

- Ensure that the input current does not exceed the maximum value specified in the technical documentation.

ATTENTION!

Damage to the unit due to improper screw connections

The use of unsuitable screwdrivers or incorrect screwdriving methods can damage screw connections and housing parts. This can result in functional impairments or failures of the unit.

Safety measures:

- Only use screwdriving tools with the correct dimensions and shape for the screw heads used.
- Tighten all screws to the tightening torque specified in the technical documentation.
- Avoid over- or under-tightening to prevent damage.

ATTENTION!

Equipment damage due to unsuitable output voltage

The inverter's factory-set output voltage is **205 V AC**, regardless of the connected input voltage.

When using **magnets rated for 110 V AC**, the output voltage must be limited accordingly via the parameter „**UMax**".

Failure to do so may result in damage or destruction of the connected magnets.

Safety measures:

- Before commissioning, check whether the output voltage is suitable for the connected loads.
- If necessary, adjust the „**UMax**" parameter in accordance with the specifications of the magnet manufacturer.
- Observe the technical data provided by the manufacturers of the connected components.

Intended use

The units described in this manual are electrical equipment for controlling vibratory feeders in industrial plants.

The Enclosure Version (IP 54) is **not** intended for installation in control cabinets. Compliance with the ambient temperature specified in the data sheet is mandatory. Deviations can lead to premature material fatigue and a reduction in service life.

The units must be mounted on a level and vibration-free surface.

Applied Guidelines and harmonized Standards

The guidelines and harmonized standards listed below were taken into account during the development and manufacture of the products mentioned:

Directive	Title	Applied Harmonized Standards
2014/30/EU	Electromagnetic Compatibility (EMC)	EN IEC 61000-6-4:2019 EN IEC 61000-6-2:2019
2014/35/EU	Low Voltage Directive (LVD)	EN IEC 62477-1:2023 + AC:2024
2011/65/EU	Restriction of Hazardous Substances (RoHS)	–

REO AG, D-42657 Solingen

Changes and Copyright

We reserve the right to make technical changes and changes to the content and structure of this documentation without prior notice.

The contents of this manual are protected by copyright. All rights, including the rights to reproduction, distribution, translation, microfilming, and storage and processing in electronic systems, are reserved by REO AG. Any use, even in part, requires the express written permission of REO AG.

1.0 General

The control unit generates an adjustable output frequency for the vibratory feeder that is independent of the mains frequency. The PFC (Power Factor Correction) circuit on the input side ensures a constant output voltage at both 110 V and 230 V input voltages.

Mains voltage fluctuations do not affect the feeding capacity. In combination with an acceleration sensor, the vibration amplitude control operating mode enables a constant material flow, even with changing feeder loads. In this operating mode, the resonant frequency of the feeder can also be detected and the output frequency continuously adjusted.

An integrated track control uses a PNP distance sensor to set up a jam switch for regulating the material flow. A 24 V DC output is available on the IP 54 enclosure version for connecting a blow air valve.

The unit is operated via an LC display in conjunction with integrated programming buttons. All settings can be made via the display without having to open the housing.

Special Features

- Mains voltage-independent output voltage up to 205 V AC
- Adjustable output frequency independent of mains frequency
- Minimum and Maximum limits of the frequency range adjustable
- Adjustable current limitation to limit the maximum magnet current
- Constant feeding performance, e.g. under mains voltage fluctuations
- Automatic regulation of the resonant frequency
- Status relay for operating display (ON/OFF)
- Ready relays (only for IP 20 housing version)
- Integrated track control via PNP sensor
- 24 V DC output for air valve (IP 54 only)
- Storage of up to four application-specific parameter sets
- Optional: Operation via fieldbus interface
- Thermal switch input for monitoring the magnet temperature

Enclosure Version
IP 54

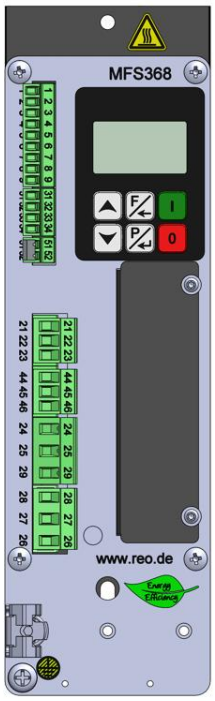

Control Cabinet
Version IP 20

2.0 Function

The unit generates an adjustable output voltage with a freely selectable output frequency, independent of the mains frequency. An integrated PFC circuit on the input side ensures a constant output voltage in the range from 99 V to 264 V AC input voltage. The feeder output is controlled by regulating the output voltage.

The output can be enabled or disabled either via the integrated unit input keys or through a release input controlled by an external controller.
After activation, the output ramps up over a configurable rise time. Upon deactivation, the output ramps down over a configurable fall time.

The unit can be operated in manual mode (with constant output frequency) or in control mode with amplitude control and automatic frequency tracking. For control mode, an acceleration sensor, e.g., type SW10, is required, which must be mounted on the vibrating part of the feeder. This sensor measures the vibrating movement of the feeder and transmits the actual value to the internal control system. In this operating mode, the unit determines the resonant frequency of the feeder in addition to the amplitude regulation. If the load changes, the frequency is automatically adjusted to ensure constant feeding performance at the optimal vibration frequency.

By default, the feeding performance setpoint is configured via the integrated display.
Alternatively, it can be specified externally using an analog control signal in the range of 0…10 V DC or 0(4) …20 mA DC.

An integrated track control is available to control the material flow. This enables a jam switch to be implemented via an external 24 V PNP distance sensor. Adjustable switch-on and switch-off delays allow the material flow to be interrupted in a targeted manner (material jam). In addition, a timeout function can be used to monitor whether conveyor parts pass the sensor within a defined time window (e.g., for empty signal).

As an alternative to the material flow control, the sensor input can be used for switching to a second, internally adjustable setpoint, e.g. to realize a "fast/slow" function.

In parallel with the control of the feeder, a 24 V DC output is available in the IP 54 enclosure version for actuating a blow air valve to support the parts flow. The output can be activated before the feeder starts and deactivated with a time delay after the feeder has stopped. Both the switch-on and switch-off delays are adjustable.

Depending on the feeder system, the nominal current of the unit can be adjusted between 5% and 100%. If the defined current limit is reached, the output voltage is automatically reduced to prevent the limit from being exceeded.

Critical parameters such as the current limit and frequency limits are grouped in a dedicated Limit Values Menu. Access to this menu is only possible after entering an authorization code in the Service Menu.

Within the Service Menu, the current device settings can be saved, or the factory default settings can be restored.

2.1 Track Control

The output of the control unit is switched ON or OFF depending on the level of the conveyed material detected by a material sensor via internally adjustable time delays **(“t on” and “t off”).** The level fluctuates around the position of the sensor installed in the filling section.

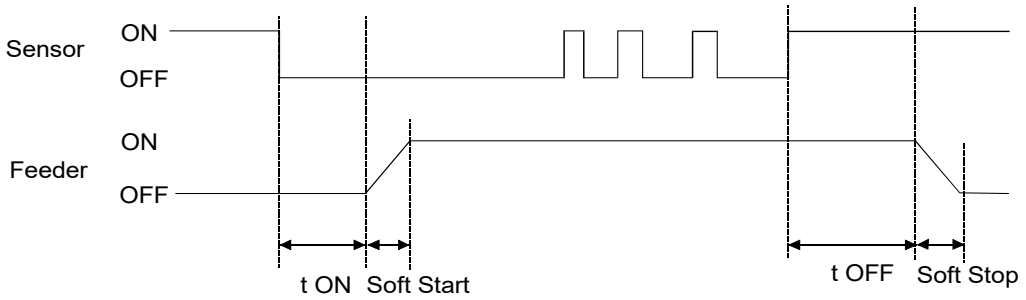

If the sensor is no longer covered by the conveyed material and the set switch-ON time delay has elapsed, the output of the control unit is activated.

Once the material again exceeds the sensor position, the output is deactivated after the switch-OFF delay has elapsed.
In this case, the status message („ full “).appears on the display.

Feeder material interruptions (gaps in the material flow) reset the running time delays. The delay times are determined by the first or last piece of feeder material detected. The parameters for the switch-on and switch-off delay times can be set in the programming menu.

The progress of the internal timing functions is indicated by a clock symbol on the display.

In addition, a sensor timeout function can be activated when the unit is switched on. This automatically switches off the unit if no material passes the sensor within a set period (1 to 240 seconds). When the unit is switched off, the status relay is also deactivated. The display alternately flashes **“Track Timeout”** and **“Info 0001”**.

This function is optional and must be enabled in the ***track control*** menu by activating the “**Timeout On”** = ☑ setting.

2.2 Operation with two Conveying Speeds (2nd Setpoint for Coarse/Fine Changeover)

As an alternative to track control, the device can be operated with two conveying speeds. In this mode, the system switches between a **first setpoint (coarse feeding)** and a **second setpoint (fine feeding).**

Switching is controlled via the same sensor input that is otherwise used for track control. The control signal may be either a floating contact or an external 24 V DC signal.

If a 24 V DC signal is applied to the input, the system switches immediately to the second setpoint (fine feeding) without delay.

Note: When coarse/fine switching is activated, the track control function is deactivated.

2.3 Control Inputs and Outputs

2.3.1 Enable Input

The enable input is used for external control of the power output.

- **Signal type:** Potential-free contact or 24 V DC signal voltage
- **Function:** Activates or deactivates the power output of the unit
- **Application:** Enables external control, e.g. via a programmable logic controller (PLC) or for linking several units in a system

2.3.2 Sensor Input for Track Control

The sensor input is used to detect the material level or to switch to a second setpoint.

- **Function 1:** Level detection for implementing a jam switch in the unit line
- **Function 2:** Alternatively, switching between two setpoints (e.g., coarse/fine feeding)
- **Signal type:** 24 V DC (PNP)

2.3.3 External Setpoint

The target value for the feeding capacity can alternatively be specified via an external analog signal:

Signal types:

- 0 … 10 V DC
- 0(4) ... 20 mA DC

To activate the external setpoint specification, the “External setpoint” parameter must be activated in the “Feeder” menu.

Note on switching:

Before activating the external setpoint, use the arrow keys to set the desired minimum value. Only then should you switch to external mode. The last value set remains the lower limit value when the external setpoint is “0”.

2.3.4 Control output Status Relay

The status relay indicates the operating state of the unit:

Versions:

- Housing variant IP 20: Changeover contact, max. 250 V AC
- Housing variant IP 54*:* Normally open contact, max. 24 V DC

Function:

The relay is energized when the feeding operation is switched on.
In the event of a missing enable signal or a fault, the relay is de-energized.

2.3.5 Control Output 24 V DC „Time-Out“ (IP 54)

The control output is activated if no conveyed material is detected by the material sensor within a defined period of time.

This function can be activated via the **“Timeout on”** parameter.

2.3.6 Ready Relay (IP 20)

Relay contact: Changeover contact, max. 250 V AC

The ready relay opens contact **45 - 46** if one of the following conditions occurs:

- a fault condition (e.g. overload)
- the configured current limit is reached

2.3.7 Control Output 24 V DC - Air Valve (IP 54)

- **Output voltage:** 24 V DC
- **Function:** Controls an external blowing air valve
- **Switch-on time:** Simultaneous with feeder start (factory setting)
- **Switch-off time:** 4 seconds after feeder stop (factory setting)
- **Adjustable parameters:**
    - Switch-on delay via parameter **“Air lead time “**
    - Switch-off delay via parameter **“Air delay time “**

2.3.8 Thermal Switch (Series)

- **Function:** Connection of an external thermal switch for monitoring the operating temperature
- **Installation location:** The thermal switch is mounted by the user on the feeder’s magnet
- **Purpose:** Protects the conveying system from overheating by initiating a shutdown if the defined temperature limit is exceeded

2.4 Touch Panel

The unit is operated using an integrated membrane keypad in combination with a text/graphic display.
All unit settings can be configured via the menu-guided interface on the display.

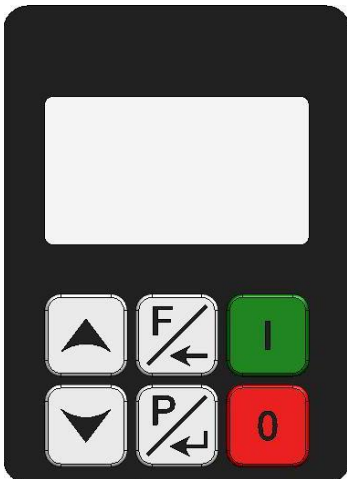

Operating display

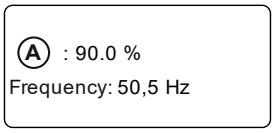

Status line
Conveyor setpoint
Frequency conveyor

Start / Reset

Stop

Symbols "Function"

- Conveying Capacity
- Feeder
- Locked (no Enable)
- Track Ctrl.
- Limits
- Information
- Language
- Time Out

Symbols of the status line

- Stop-Button
- „Busy“ on Storage
- Key Set
- Service Enabled
- Mains Undervoltage
- Hopper Mode
- Air Valve Active
- Interface Card Active
- Ramp-Up
- Ramp-Down

Key	Function in Menu Mode	Function in Value Input Mode
Arrow Keys	Select menu item	Change displayed value
F Key	Return to previous menu level	Cancel value input
P Key	Enter submenu	Confirm entered value

3.0 Construction

The unit is available in **IP 20** and **IP 54** versions.

3.1 IP 54 Version

The IP 54 unit version has the following components:

- Mains switch
- Operating and display panel
- Mains connection cable (optional)
- Output cable or output socket for connecting the feeder
- Sensor connections for 24 V DC sensors with PNP output

3.2 IP 20 Version

The IP 20 unit version has the following features:

- Mounting points for installation on a mounting plate
- Electrical connection via external terminals

4.0 Technical Data

Parameter	IP 54 Version	IP 20 Version
Degree of protection	IP 54	IP 20
Protection class	I	I
Input voltage	99 V … 264 V AC	99 V … 264 V AC
Max. permissible input current *1	2 A	2 A
Input frequency	50 / 60 Hz	50 / 60 Hz
Inrush current	Î = 9 A, 20 ms	Î = 9 A, 20 ms
Power dissipation	max. 55 W	max. 55 W
Output voltage	0 … 205 V ±5 %	0 … 205 V ±5 %
Output current	3 / 6 / 8 A ±5 %	3 / 6 / 8 A ±5 %
Output frequency *2	20 Hz … 140 Hz	20 Hz … 140 Hz
Recommended circuit breaker	6 A, type B or C	6 A, type B or C
Residual current device (RCD)	Type B	Type B
Mains system	TN system	TN system
Rated short-time withstand current (I_{cw})	< 10 kA	< 10 kA
Rated short-circuit current (I_{cc})	< 10 kA	< 10 kA
Enable input	Potential-free contact / 24 V DC	Potential-free contact / 24 V DC
Analog setpoint	0 … +10 V DC, 0(4) … 20 mA	0 … +10 V DC, 0(4) … 20 mA
Valve output (air blast)	24 V DC, 100 mA	–
Timeout output	24 V DC, 100 mA	–
Material sensor connection	24 V DC, PNP output (100 mA)	24 V DC, PNP output (100 mA)
Status relay (operation) *3	NO contact, 24 V / 1 A	Changeover contact, 250 V / 1 A
Ready relay (fault)	–	Changeover contact, 250 V / 1 A
Operating temperature	0 °C … +40 °C	0 °C … +40 °C
Storage temperature	–10 °C … +65 °C	–10 °C … +65 °C
Relative humidity (storage)	10 % … 95 % RH, non-condensing	10 % … 95 % RH, non-condensing
Weight	approx. 2.7 kg	approx. 2.3 kg

Notes:

*1 Important information regarding current consumption can be found in Chapter 4.5. Failure to observe this may result in malfunctions or damage to the unit.

*2 *Other output frequencies available on request.*

*3 The terminals of the status and ready relays (terminals 21–23 and 44–46) must not be connected to different network classes. Both relay contacts may only be used with signals of the same network class.

4.1 Warning Signs

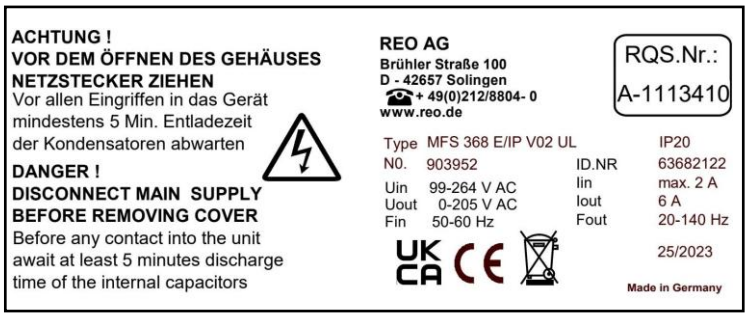

The label with the text “Warning: Hot Surface” must be affixed in a clearly visible position on the heat sink.

4.2 Terminal Details

Tightening torque:

- **Terminal type MSTB / GMSTB / GMSTB-GIC**

Terminals 21–29 and 44–46

Tightening torque: **0.5–0.6 Nm**

- **Terminal type MC**

Terminal blocks 1–9, 31–34 and 51–52

Tightening torque: **0.22–0.25 Nm**

4.3 Temperature of the Protective Housing

The unit may only be installed on concrete or other **non-combustible** surfaces

4.4 Coolant Type

The unit is cooled by free convection.

4.5 Current Consumption

The input current specified in the technical data represents the maximum permissible input current of the unit. Exceeding this value can lead to malfunctions and failure of the unit.

The current consumption is inversely proportional to the applied input voltage:

At higher input voltages, the input current is lower; at lower input voltages, the input current is higher accordingly.

Example:
A 230 V vibration feeder operates with the MFS368 control unit on a 230 V mains supply. The measured current consumption is 1 A. If the same feeder is operated on a 110 V mains supply, the input voltage is reduced by half. In this case, the current consumption doubles to approximately 2 A.

Note:
When configuring the unit, especially for international applications, ensure that the maximum specified input current is not exceeded at the lowest expected mains voltage.

5.0 Ordering Codes

1 0 200 6368 2 1 2 1

Interfaces

0= --- → No interface
1= EC → EtherCAT
2= EIP → Ethernet/IP
3= PN → PROFINET
4= DP → PROFIBUS
5= CAN → CAN bus
6= DN → DeviceNet

Rated Current

1= 3A
2= 6A
3= 8A

Device Versions

0= IP20 V → Vertical Design
1= IP20 V UL → Vertical Design UL
4= IP54 EK/AK → Input Cable/Output Cable
6= IP54 EK/AD → Input Cable/Output Socket
8= IP54 PV → Plug&Vib
9= IP54 PV UL → Plug&Vib UL

(EK= open cable ends)

Version

1= IP20 Basic
2= IP20 Series
4= IP54 Basic
5= IP54 Series

5.1 Control Connections (depending on Unit Version)

Function	Basic 3 A / 6 A / 8 A		Series 3 A / 6 A / 8 A	
	IP54	IP20	IP54	IP20
Track Control Sensor	✗	✗	✓	✓
Status Relay*1	✓	✓	✓	✓
Ready Relay*1	✓	✓	✓	✓
Enable Input	✓	✓	✓	✓
External Setpoint 0-10V, 0(4)-20mA	✓	✓	✓	✓
Amplitude Sensor	✗	✗	✓	✓
Thermal Switch	✗	✗	✓	✓
Air Valve	✗	✗	✓	✗

5.2 Range of Functions (depending on Unit Version)

Function	Basic 3 A / 6 A / 8 A		Series 3 A / 6 A / 8 A	
	IP54	IP20	IP54	IP20
Status/Ready Output*1	✓	✓	✓	✓
Amplitude Control (ACC)	✗	✗	✓	✓
Frequency Control (AFC)	✗	✗	✓	✓
Frequency Scan (AFS)	✗	✗	✓	✓
Air Valve	✗	✗	✓	✗
Track Control	✗	✗	✓	✓
Timeout Output	✗	✗	✓	✗
Hopper Mode	✓	✓	✓	✓
Thermal Switch Input	✗	✗	✓	✓
External Setpoint Input switchable*2	✓	✓	✓	✓
Second Setpoint	✗	✗	✓	✓
Interface (optional)	✓	✓	✓	✓

**1 For protection rating IP 54: potential-free contact with switchable function.*
**2 For protection rating IP 54: internal connection required.*

Legend:
✓ = Function available | ✗ = Function not available

6.0 Configurable Functions

No.	Symbol	Menu Item	Description	Setting Range	Factory Setting
1.0		**Power**			
1.1		Feeder	Feeder output	0–100%	0%
1.1.1		Fine	Fine adjustment of setpoint (previously “Activate Coarse/Fine”)	0–100%	0%
2.0		**Feeder**			
2.1		Frequency	Set output frequency	35–140 Hz	100 Hz
2.2		Invert Enable	Invert the enable function	☑/☐	Off
2.3		State↔Ready	Switch Status-Ready relay (for devices with only one relay output)	☑/☐	Off
2.4		External Setpoint	Activate external setpoint	☑/☐	Off
2.4.1		Setpoint	Setpoint type: 0/2/1–10 V / 0/4–20 mA	0/2/1–10 V / 0/4–20 mA	0–10 V
2.5		Soft Start	Set Soft Start time (0% to 100% setpoint)	0–60 s	1 s
2.6		Soft Stop	Set Soft Stop time (100% to 0% setpoint)	0–60 s	0.1 s
2.7		Max.	Limit maximum feeder output	0–100%	90%
2.8		Acc Regulation	Activate Acc regulation (deactivating disables Auto Freq.)	☑/☐	Off
2.9		Auto Freq.	Activate frequency search and tracking (only active if Acc Regulation is enabled)	☑/☐	Off
2.10		Regulator Settings*3			Off
2.10.1		Acc Prop. Gain*3	Adjust P Component of Acc. Regulator (only if Acc Regulation is enabled)	0.01–100	0.40
2.10.2		Acc Integral*3	Adjust I Component of Acc. Regulator (only active if Acc Regulation is enabled)	0.01–100 s	0.15 s
2.10.3		I Prop. Gain*3	Adjust P Component of Current Regulator	0.01–100	0.40
2.10.4		I Integral*3	Adjust I Component of Current Regulator	0.01–100 s	0.15 s
2.11		Auto Freq. Scan	Activate auto frequency search (only active if Acc and AFC Regulation is enabled)		
2.12		Air Jet Present*1	Activate air blow function	☑/☐	Off
2.12.1		Air Lead Time*1	Set air blow lead time	0–60 s	0 s
2.12.2		Air Delay Time*1	Blowing air shut-off delay	0–60 s	4 s
2.13		Hopper Mode	Activate cyclical output for the feeder	☑/☐	Off
2.13.1		Time On	On-time (hopper cycle)	0–60 s	15 s
2.13.2		Time Off	Off-time (hopper cycle)	0–60 s	4 s
3.0		**Track Control**			
3.1		Coarse/Fine	Coarse/Fine mode	☑/☐	Off
3.2		On Delay	On-delay time	0–60 s	5 s
3.3		Off Delay	Off-delay time	0–60 s	5 s
3.4		Enable Timeout	Enable sensor timeout	☑/☐	Off
3.5		Timeout	Set sensor timeout duration	1–240 s	180 s
3.6		Inv. Sensor	Invert sensor	☑/☐	Off
4.0		**Limit Values**			
4.1		Current	Actual current display	View only	
4.2		Current Limit*3	Set current limit	5–100%	100%
4.3		Electr.Fuse*3	Output shut off instead of output current limiting	☑/☐	Off
4.4		Min. Freq.*3	Set minimum frequency	20–140 Hz*2	35 Hz
4.5		Max. Freq.*3	Set maximum frequency	20–140 Hz*2	140 Hz
4.6		Thresh.AFC*3	Set AFC threshold	0–100%	10%
4.7		UMax*3	Limit output voltage 230 V coil → Umax: 100% 115 V coil → Umax: 50%	0–100%	100%

5.0		**Interface**			
5.1		Bus Mode	Enable/disable bus operation	☑/☐	Off*4
5.2		Bus Address	Internal bus address (do not change)	1–16	1
5.3		Bitrate	Internal bus bitrate (do not change)	1 Mbit/s / 500 kbit/s	1 Mbit/s
5.4		Protocol	Interface protocol (do not change)	V1.i / V2.f	V1.i
6.0	ⓘ	**Info**			
6.1			Software Version		
7.0		**Service**			
7.1		Clear Error/Reset	Acknowledge error messages	Execute	
7.2		Factory Settings*5	Load factory settings	Execute	
7.3		User Index	Select parameter set	1 / 2 / 3 / 4	
7.4		Save Usr Params	Save current parameters to the selected parameter set (only if key no. 143 is active)	Execute	
7.5		Recall Usr Params	Load and apply selected parameter set	Execute	
7.6		Language	Select language	DE, EN	EN
7.7		Code	Enter key number	117 / 127 / 143	
7.8		Backlight on	Backlight: always on/off/timeout	On/Off / 0–999 s	
7.9		Inverted Display	Invert display colors	☑/☐	Off

**1 only available with the enclosure version*
**2 Other frequencies on request*
**3 These menu items are only displayed if the "Service Menu" is activated.*
**4 depending on unit type*
**5 After loading the factory settings, check the "UMax" parameter.*

- *Key 117: Entry "Close" becomes visible. This can be used to hide/show various menus.*
- *Key 137: "Lock" entry This can be used to hide/show additional menus.*
- *Key 127: Entry "Service Menu" becomes visible. This makes further parameters available.*
- *Key 143: Entry "Save Usr Params" becomes visible.*

7.0 Operating Elements

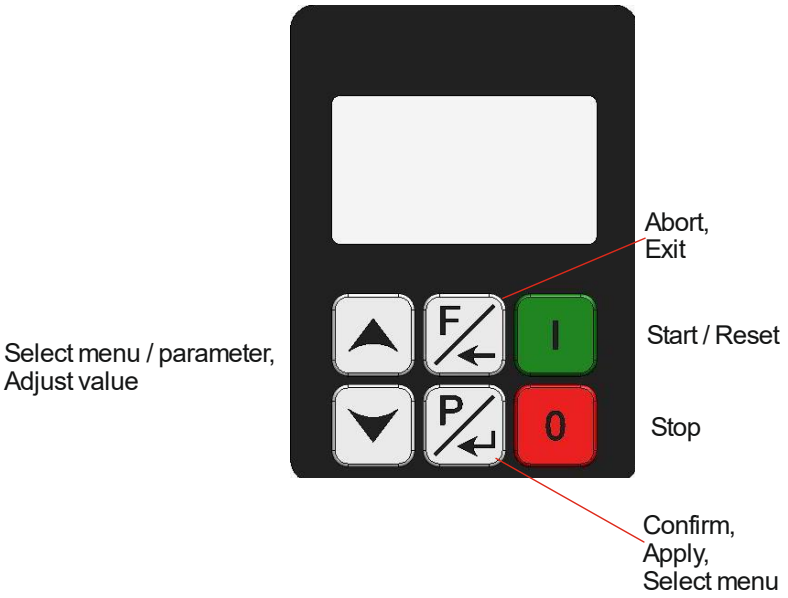

7.1 Adjustment Behavior

Start on the Homescreen

1. Jumping to the menu from the home screen
2. Navigate to the desired menu item
3. Select menu and open the submenu
4. Select parameter
5. Activate parameter entry (Editing mode)
6. Change parameter / Adjust value
7. End parameter input, the new value is saved
8. Back to previous menu

Use shortcut menu
Start on the Homescreen

1. Leads to the shortcut menu (to the setpoint parameter)
2. Activate parameter entry (Editing mode)
3. Adjust parameters (Setpoint)
4. End parameter input
5. Back to Homescreen

7.1.1 Example Parameter Configuration

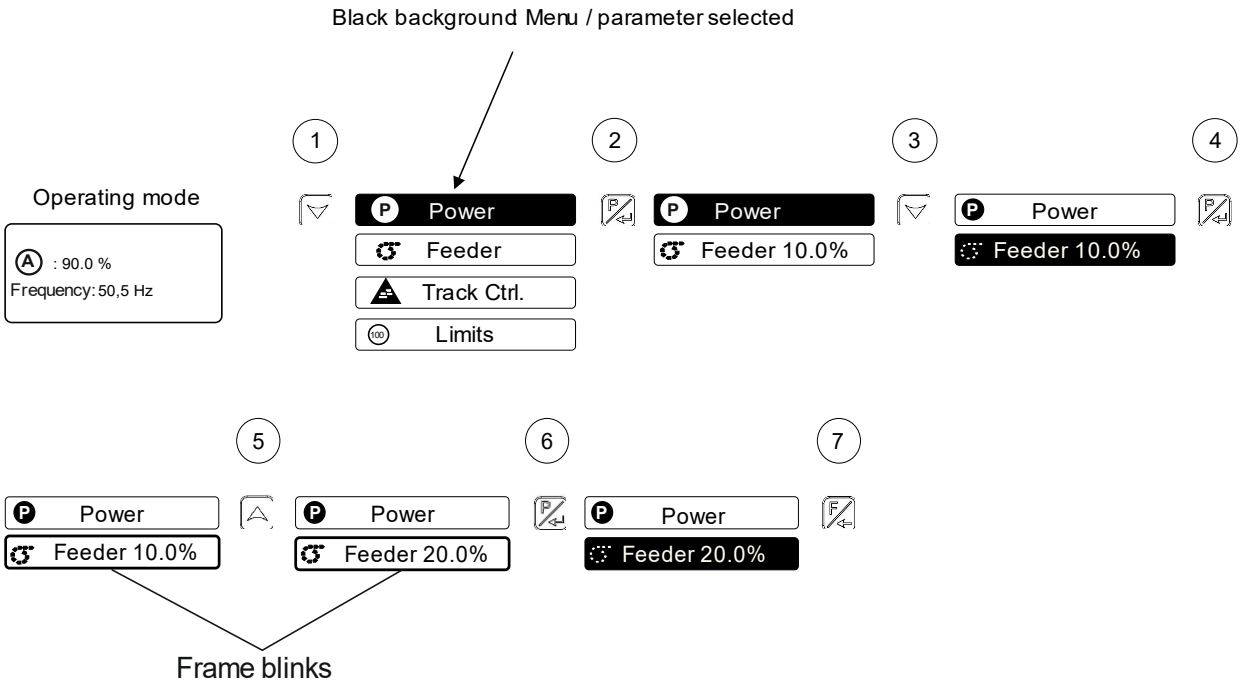

7.1.2 External Setpoint Example

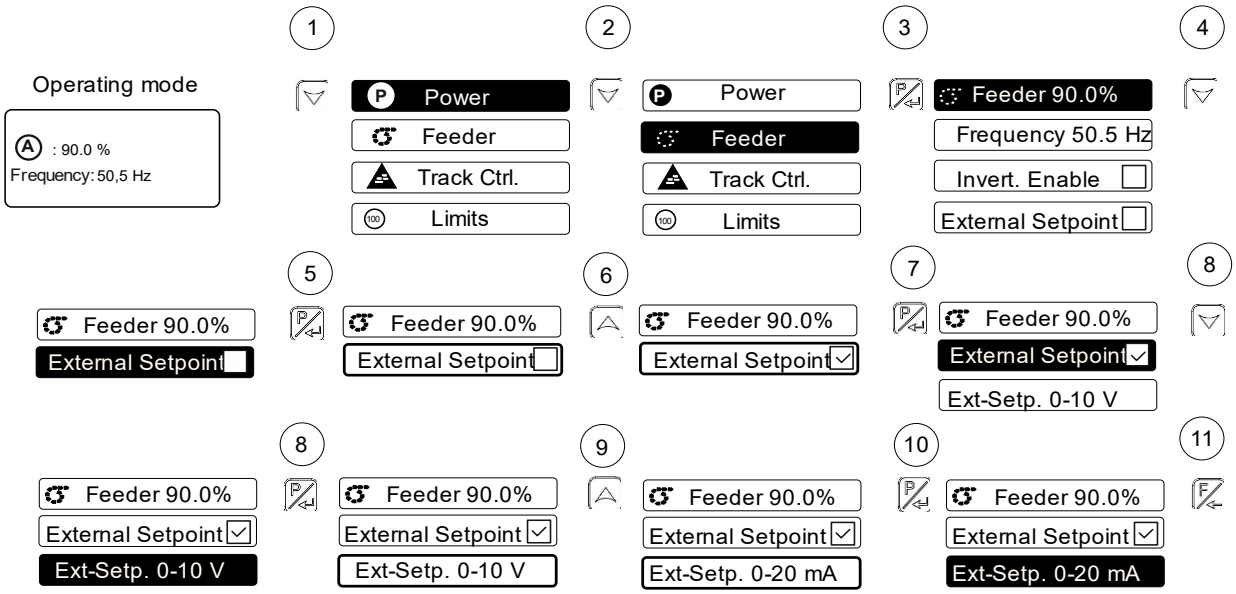

8.0 Commissioning

8.1 Preparatory Measures

Notes on operation in the resonant frequency range

The control units described in this document allow the frequency of the connected vibratory feeder to be adjusted to within the range of its resonant frequency.

Since even a low setpoint value in this frequency range can cause the feeder to reach its maximum allowable vibration, special caution is required. Over vibration/deflection can cause “hammering” and this can cause mechanical damage to the feeder.

Operation in the resonant frequency range is not usable in practice without feedback of the vibration acceleration. Without feedback the feeder cannot operate reliably.

For this reason, a sufficient frequency offset from the resonant frequency must be maintained. This frequency distance can be either below or above the resonant frequency.

Note on the output voltage of the converter

Regardless of the applied input voltage, the output voltage of the converter is 205 V AC in the delivery state.

If a vibration feeder is operated with a 110 V AC magnet, the output voltage **must** be limited accordingly using the **“UMax”** parameter. Otherwise, there is a risk of **damage to the magnet, drive unit, or the entire vibratory feeder system**.

Commissioning – Preparation

1. **Check mains voltage**
   Verify that the local supply voltage matches the operating voltage specified on the unit nameplate.
2. **Check power rating**
   Ensure that the power consumption of the connected feeder lies within the permissible range.
3. **Verify compatibility**
   Check whether the output voltage and output frequency of the controller are compatible with the installed magnet.
4. **Electrical Connection**
   Connect the unit according to the enclosed wiring diagram.
5. **Set Setpoint**
   Set the control setpoint to 0%.
6. **Deactivate Enable**
   If present, deactivate the enable circuit.

Note:
After completing the above steps, the control unit is ready for operation. It can now be activated via the mains and Enable.

Resonant Frequencies

Due to the physical properties of the spring-mass system in vibratory feeders, the system may resonate at multiple frequencies. In addition to the intended operating frequency, harmonic resonant points may occur.
In such cases, the automatic frequency search may not reliably detect the correct vibration frequency. Manual adjustment of the operating frequency may be required.

Storage

After a storage period of up to one year, the internal DC link capacitors must be reformed before commissioning. To do this, connect the MFS control unit to the mains without load for at least 60 minutes.
For units with protection class IP54, the mains switch must also be switched on.

After a storage period of more than one year, capacitor reforming must be carried out by the manufacturer.

Caution:
Improper capacitor reforming may result in damage or destruction of the unit.

8.2 Operating Frequency of the Feeder Magnets

At low frequency settings, increased current flow through the magnet may occur. Therefore, when starting up for the first time, check the current at the controller output using a suitable effective value measuring device. Alternatively, monitor the heat rise at the magnet.

To prevent the magnets from being overloaded due to excessive current consumption, make sure that the magnets used are designed for the intended operating frequency.

Caution: Using oscillation frequencies that are outside the designed limits of the feeder can damage or destroy the magnet, drive unit, or vibratory feeder. Only use magnets that are suitable for the planned operating frequency.

8.3 Measurement of Output Voltage and Output Current

The unit output operates as an electronic inverter with pulse width modulated switching signals. Therefore, conventional measuring units are generally unsuitable for measuring output voltage and output current.

Moving-iron instruments are recommended to ensure reliable measurement results.

9.0 Settings

9.1 Notes on Operation in Control Mode

- **Controller Operation**: For operation with a controller, an acceleration sensor mounted on the vibratory feeder is required, e.g., **SW 70** (for devices with degree of protection IP54) or **SW 10** (for units with degree of protection IP20).

- **Sensor Feedback**: In closed-loop operation with sensor feedback, all vibrations detected by the sensor are processed within the control loop. External vibrations caused by nearby machinery, an unstable installation site of the feeder, or insufficient mounting of the acceleration sensor may result in incorrect control behavior. Especially during the automatic frequency search process, **no external mechanical influences** must act on the feeder.

9.2 Mounting the Acceleration Sensor

The acceleration sensor detects the vibration and acceleration of the feeder and transmits the measured values to the control loop of the control unit. To ensure reliable feedback, the sensor must be mounted in a mechanically stable and low-vibration manner. Improper mounting may cause undesired parasitic vibrations and impair control performance.

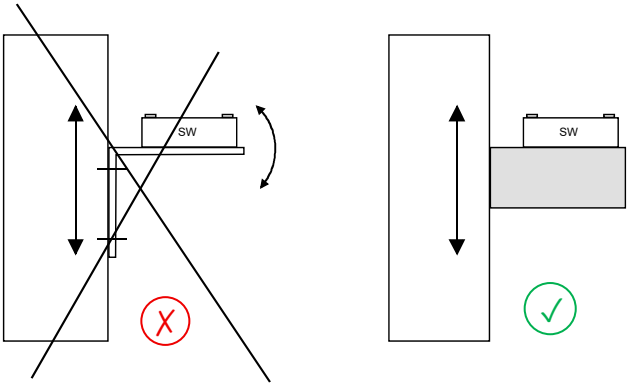

Mount the sensor in the direction of oscillation, ideally at the same inclination as the feeder springs, on a solid mounting block that does not generate any natural vibrations.

Cable fastening of the acceleration sensor cable. The acceleration sensor cable must be mechanically supported with a suitable cable clamp. This reliably prevents damage to the cable due to tensile or bending stress

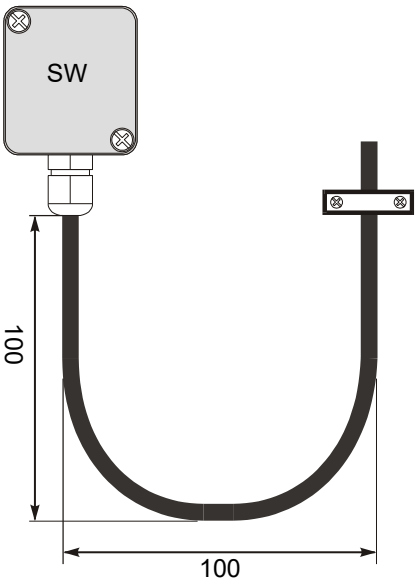

Cable clamp

In control mode, the height of the output signal directly determines the maximum vibration amplitude of the feeder.

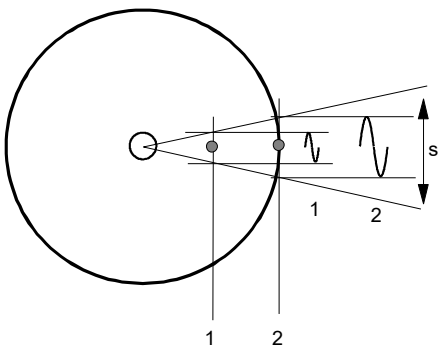

Mounting point 1 = small vibration amplitude
Mounting point 2 = large vibration amplitude

(Example: Rotary feeder)

Mounting instructions for rotary feeders

For rotary feeders, the acceleration sensor should be mounted as close as possible to the outer diameter of the feeder pot. This ensures that the maximum oscillation amplitude is detected, which improves the accuracy of the control.

A sensor signal that is too low can significantly limit the control range of the setpoint.

s = vibration amplitude

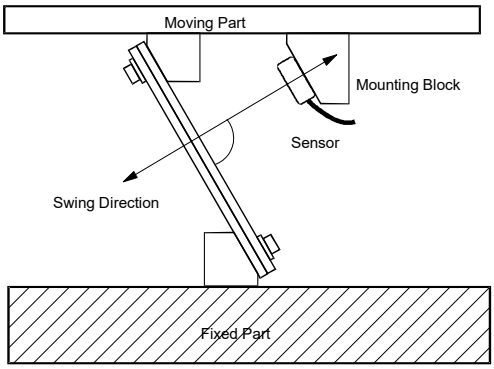

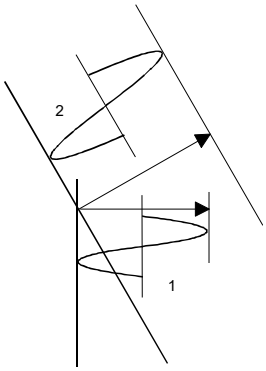

1. Small vibration amplitude with vertical mounting.
2. Larger vibration amplitude when mounted at the same inclination angle.

(Example: Linear feeder)

Note on control mode

The control and the sensor attached to the feeder form a closed control loop. The signal supplied by the sensor significantly influences the control range of the setpoint. The controller controls the feeder so that the actual value (feeder output or vibration intensity) corresponds to the specified setpoint (setpoint 100% = actual value 100%).

However, since the actual value depends on feeder-specific properties such as frequency, acceleration, and vibration amplitude, as well as on the mounting location of the sensor, it is usually necessary to adjust the control range.

The adjustment is made using the “Max” parameter in the “Feeder” menu. This parameter is used to adjust the measured sensor signal. In practice, a value less than 100 is usually set so that the setpoint range extends to 100% or is as large as possible.

If satisfactory adjustment is not possible, we recommend mounting the acceleration sensor at a position with a larger vibration amplitude (see example “Rotary Feeder”).

The importance of correct adjustment is particularly evident in the control behavior of the feeder. If the actual value signal is not adjusted sufficiently, the feeder may start up with a delay when switched on, for example.

9.3 Correlation between Acceleration and Vibration Amplitude

The sensor measures the instantaneous acceleration of the feeder. This produces a sinusoidal voltage at the sensor output. The measured acceleration increases with increasing vibration frequency.

This means that the sensor signal can be greater at higher frequencies and smaller vibration amplitudes than at lower frequencies and larger vibration amplitudes.

Acceleration $a = \omega^2 s$ whereby $\omega = 2\pi f$ In practice, vibration acceleration is often referenced to the acceleration due to gravity, while the effective vibration amplitude is measured in millimeters. This results in the following practical approximation formula: $a[g] = \frac{2^2 \pi^2 f^2 [Hz]^2 s_n [mm]}{9{,}81 \quad 2 \cdot 10^3} = \frac{f^2 [Hz]^2 s_n [mm]}{497}$ a[g] = acceleration (referenced to gravitational acceleration 9,81m/s²) S_n[mm] = effective vibration amplitude (peak-to-peak displacement)	In practical application – with the factor 497 approximated to 500 – the following values can be derived: 1.Vibration Frequency 50 Hz | vibration amplitude 3 mm $a = \frac{50^2 \cdot 3}{\approx 500} = 15g$ or 2. Vibration Frequency 33 Hz | vibration amplitude 5 mm $a = \frac{33^2 \cdot 5}{\approx 500} = 10{,}89g$

At a sensor output voltage of 0.3 V/g, a peak acceleration of 15 g (see Example 1) results in a peak voltage of 4.5 V. This corresponds to an RMS value of approximately 3.18 V.

Example 1:
→ 15 g → 4,5 V_s → 3,18 V_{RMS}

Example 2:
→ 11 g → 3,3 V_s → 2,33 V_{RMS}

Due to the significant variation in acceleration values among different feeder types, substantial differences may occur in the feedback signals. In such cases, it may be necessary to adapt the controller to the respective maximum value.

9.4 Determining the Resonant Frequency

Caution!

Operating at resonant frequency may cause excessively large vibration amplitudes even with small setpoints. This can lead to mechanical failure of the feed system.

Manual Frequency Adjustment (Operation without acceleration sensor)

The output frequency must always be adjusted using a low setpoint. Reaching the resonant frequency may already result in high vibration amplitudes at low output voltage. To determine the resonant frequency, proceed as follows. An RMS current meter must be integrated into the output line of the controller:

1. Set a low setpoint.
2. Gradually increase or decrease the output frequency.
3. Monitor the current consumption and vibration amplitude.

The resonant frequency is reached when:

- the maximum vibration amplitude
- and the minimum output current are observed simultaneously.

To ensure stable operation, it is recommended to set the operating frequency approximately **1 Hz to 2 Hz** above or below the determined resonant frequency. This frequency offset must be defined by the user, depending on the specific characteristics and operational requirements of the feeder system.

9.5 Commissioning of the Controller in Control Mode

- Connect the controller properly in accordance with the applicable connection specifications.
- Mount and connect the acceleration sensor to the feeder in accordance with the installation instructions.
- **Note! The feeder must be empty for a frequency search.**

9.5.1 Automatic Frequency Search and Control Mode (AFC)

Initial commissioning using the example of a 50 Hz feeder

Procedure	Adjustment menu and parameters	Value	Note
Adjust setpoint to zero	Power \ Feeder	0%	Avoid unintended and uncontrolled feeder operation
Limiting output frequency*	Limit values \ Min. freq. Limit values \ Max. freq.	35 Hz 65 Hz	Limit the minimum and maximum output frequency. Please note that the minimum and maximum frequency limit values exclude the multiples of the vibrating frequency in the resonant frequency search. For safe operation, it is recommended to limit the frequency range as much as possible. In this example, the minimum value is set to 35 Hz and the maximum value to 65 Hz.
Switch ACC. controller On	Feeder \ Acc. controller	☑	This activates the amplitude control.
Switch AFC. controller On	Feeder \ Auto freq.	☑	This activates the frequency control.
Carefully increase the setpoint	Power \ Feeder	>0 %	As soon as the feeder's acceleration generates a sufficiently strong sensor signal, the frequency converter automatically starts the automatic frequency search and control. **Note!** A setpoint set too low can lead to incorrect results. **Caution!** The increments of the setpoint setting increase automatically when the key is pressed for a longer time. Please always press the button briefly for small increments The frequency converter automatically saves the last frequency found.
Adjusting the vibration amplitude	Power \ Feeder	>0%	As soon as the frequency converter regulates stably at the resonant frequency found, the desired vibration amplitude can be set.

* Only visible when the service menu is activated.

9.5.2 Automatic Frequency Scan (AFS)

Initial commissioning using the example of a 50 Hz feeder

Procedure	Adjustment menu and parameters	Value	Note
Adjust setpoint to zero	Power / Feeder	0%	Avoid unintended and uncontrolled feeder operation after the AFS has finished.
Switch Acc. controller On	Feeder / Acc. controller	☑	This activates the amplitude control.
Switch AFC. controller On (optional)	Feeder / Auto freq.	☑	This activates the frequency control.
Switch AFS. controller On	Feeder / Auto freq. scan	Press “P”	This activates the frequency scan. **Note!** The optimal frequency of the feeder is determined automatically by starting the” Auto Freq. Scan”. The "Auto Freq. Scan" searches within the preset min. and max. Frequency limits. Once the optimal frequency has been found, an acoustic signal sounds on the conveyor, and the controller sets the setpoint to 0%. **Caution!** If the output power is too high during AFS and causes the magnets to “hammer,” reduce this ‘Max’ value (e.g., to 50%) in the “Feeder” menu. The frequency search can be stopped with the red stop button on the touch panel.

* Only visible when the service menu is activated.

10.0 Troubleshooting

Error Messages

If an error occurs, a message flashes on the first line of the display.

Error Code	Error Description	Probable Cause
Error_2401 / 2402	**ACC sensor error**	Acc sensor not connected or defective.
Error_0005	**Overvoltage**	Input voltage is too high.
Error_0002	**Overload**	Incorrect frequency setting or excessive air gap in the magnet. Output exceeded.
Error_0088	**Overcurrent**	Defective magnet, ground fault, or cable.
Error_0001	**Track timeout:**	Sensor signal has been absent longer than permitted. Sensor signal missing for too long.
Error_0112	**Controller over-heated.**	Temperature in the controller is too high.
Error_0113	**Magnet overheated**	Excessive temperature at the magnet. Signal from external temperature switch.
Error_0087	**Peak current**	Frequency too low or change too fast.

Acknowledging error messages:

- Error messages can be acknowledged by selecting „**Service** → **Clear Error/Reset** “.
- In most cases, pressing the **green „I“ button** is sufficient.

Potential Problems

Problem	Additional Information	Probable Cause and Remedy
Feeder does not run	Symbol in display ⛔	Enable signal is blocked. Check wiring and configuration.
Feeder does not run	Symbol in display STOP	Red “Stop” button was pressed. Press the green “Start/Reset” button.
Feeder does not run	Display shows setpoint	Feeder is not properly connected.
ACC sensor error	Error: 2401/2402	Check correct connection of the Acc sensor.
Frequency search does not start	Fixed frequency in display	AFC controller not activated. Activate "Auto. Freq".
Frequency search does not start	Small feeder amplitude	Sensor signal too low. Increase setpoint.
Frequency search does not start	Large feeder amplitude	Sensor signal too low. Check sensor position and V/g ratio.
Frequency search stops at „Min. Freq.“	—	Resonant frequency is below minimum limit. Check settings.
Frequency search stops at „Min. Freq.“	—	Resonant frequency is above maximum limit. Check settings.
Frequency search moves away from resonant	—	Exclusively during first commissioning, it is possible that the frequency converter initially shifts away from the resonant frequency. In this case, the search will reverse at the frequency limits and move back towards the resonant frequency.

11.0 Connection of the Enclosure Version (Configuration-dependent)

PV Version (Plug and Vib): Series

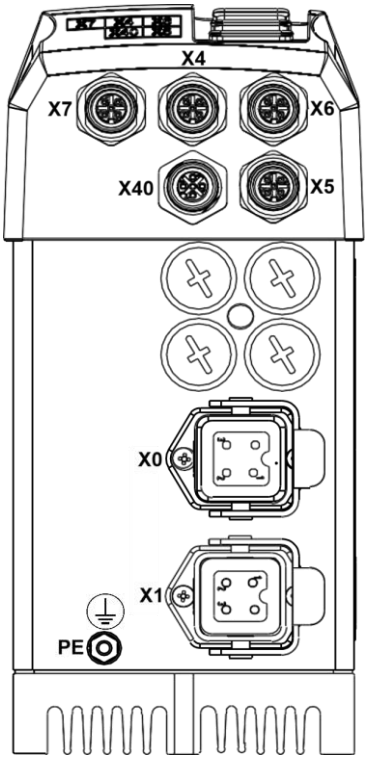

X7 Output 24V Valve
1 = +24 VDC Output
3 = GND

X4 Track Control Sensor
1 = +24 VDC
2 = nc
3 = GND
4 = +24VDC Input

X40 Acceleration Sensor
1 = +24 VDC
2 = Input
3 = GND
4 = nc

X6 Enable Input
1 = +24 VDC
2 = nc
3 = GND
4 = +24 VDC Input

X5 Status Output
1 =
2 = nc
3 = GND
4 =
Relay Contact (Max. 24V, 1A)
5 = Time out +24V Output

X0 Mains Connection 110 / 230 V, 50/60 Hz
1 = L
2 = N
3 = nc
4 = PE

X1 Output Feeder
1 = A1
2 = A2
3 = Shield
4 = PE

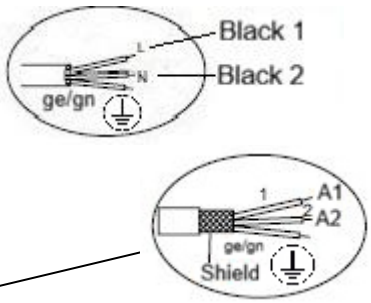

Option: Output X1 with 4+PE-Plug

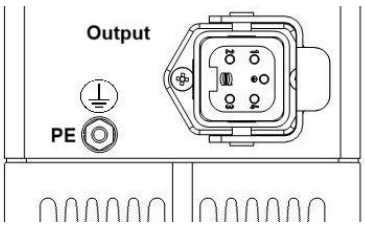

1=A1
2=A2
3=--
4=--
5=PE

Enclosure Version PV (Plug and Vib): Basic with X5 Status Output and X6 Enable Input Only.

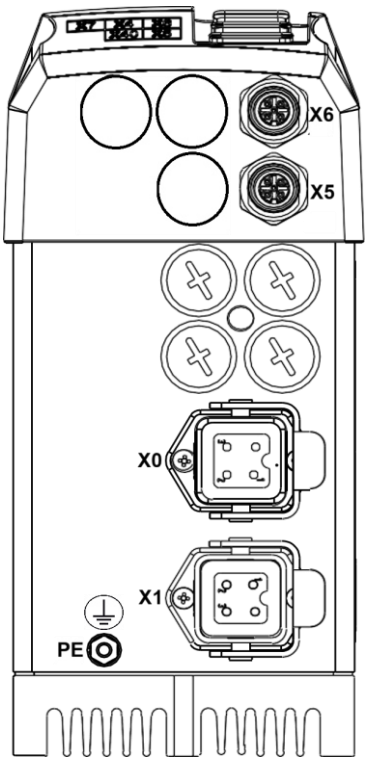

X6 Enable Input
1 = +24 VDC
2 = nc
3 = GND
4 = +24 VDC Input

X5 Status Output
1 =
2 = nc
3 = GND
4 =
Relay Contact (Max. 24V, 1A)
5 = Time out +24V Output

X0 Mains Connection 110 / 230 V, 50/60 Hz
1 = L
2 = N
3 = nc
4 = PE

X1 Output Feeder
1 = A1
2 = A2
3 = Shield
4 = PE

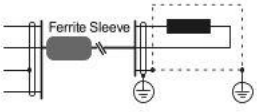

Internal Connection 3 – 8 A Units

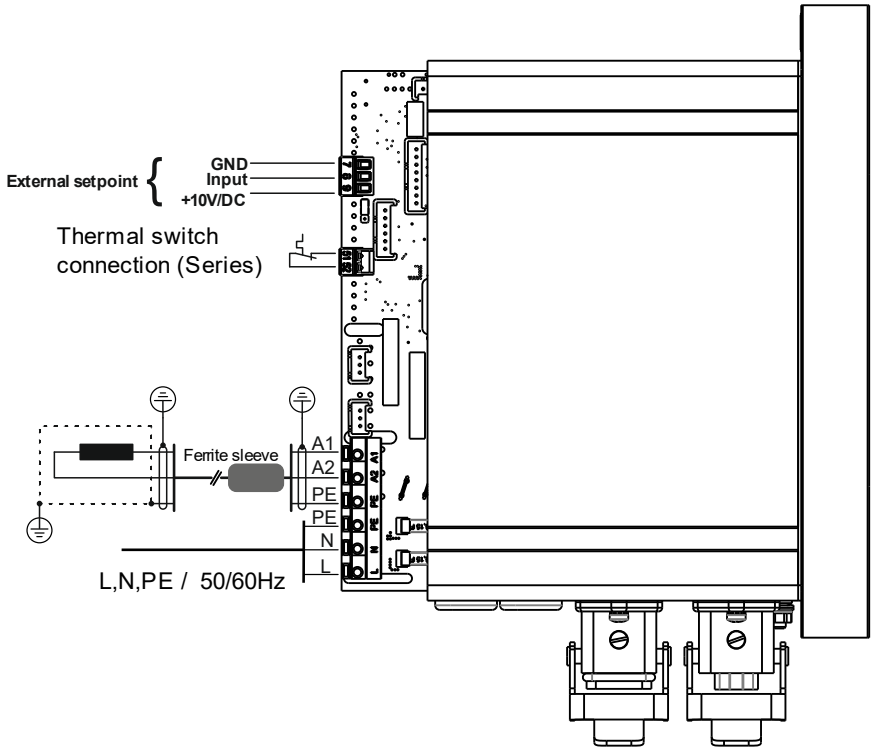

Use of a shielded Output Cable

To comply with EMC requirements**, a shielded output cable** must be used between the controller and the feeder. Additionally, route the cable through the supplied **ferrite sleeve** to suppress high-frequency interference.

external enable

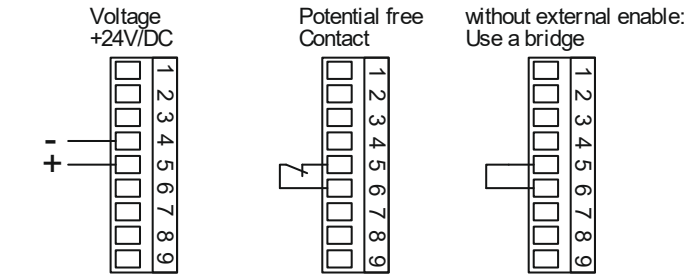

external setpoint

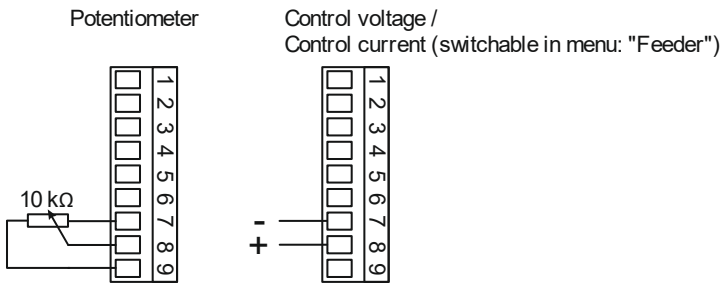

12.0 Connection of Control Cabinet Version

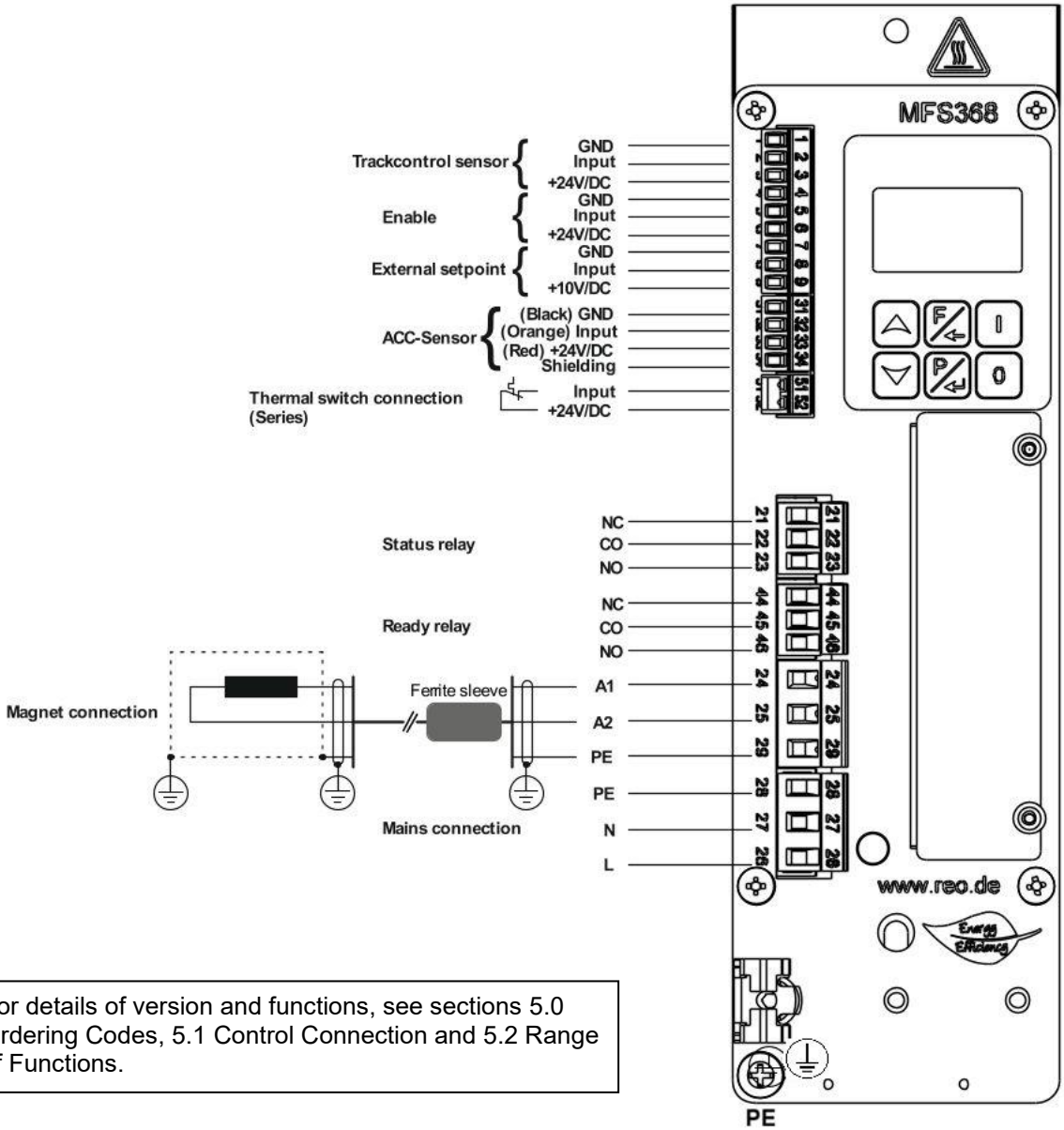

For details of version and functions, see sections 5.0 Ordering Codes, 5.1 Control Connection and 5.2 Range of Functions.

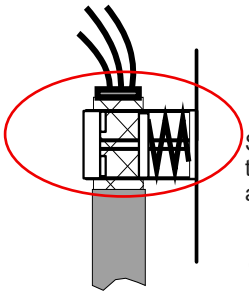

Spring clamp for the shield connection for the output cable and the acceleration sensor

EMC shield clamp (accessory)
Order No.: 900090240

Use of a shielded Output Cable
To comply with EMC requirements**, a shielded output cable** must be used between the controller and the feeder. Additionally, route the cable through the supplied **ferrite sleeve** to suppress high-frequency interference.

13.0 Dimension Drawing

Enclosure Versions IP 54

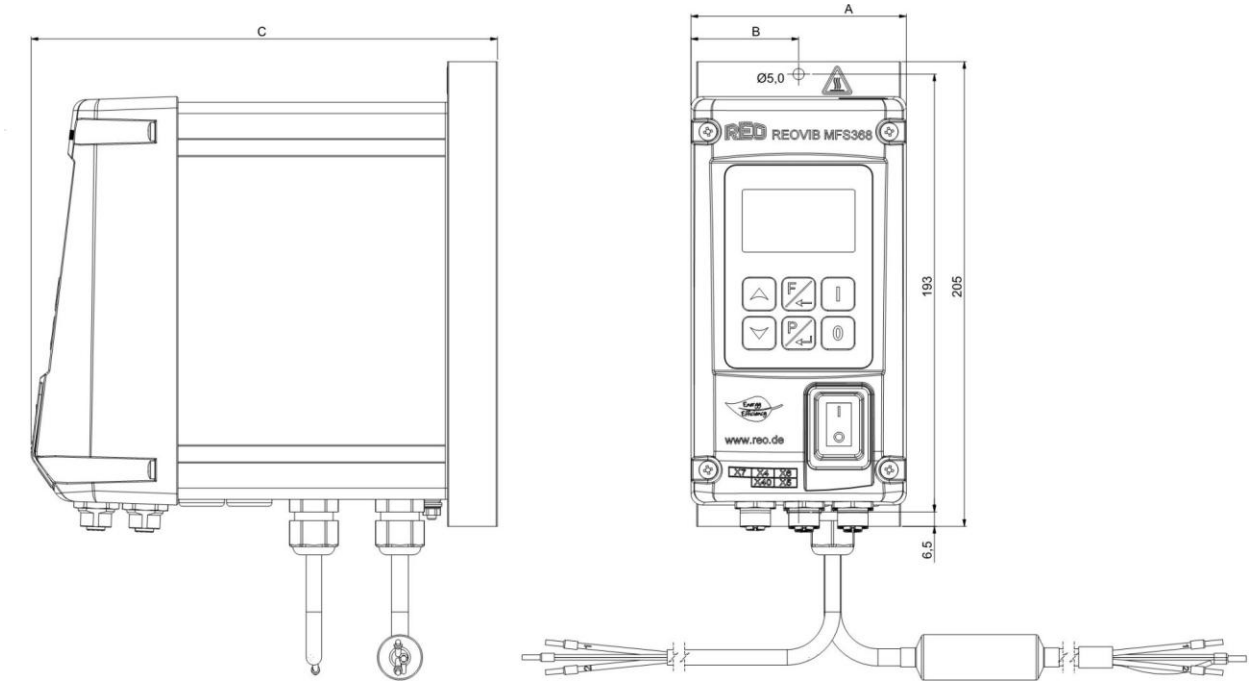

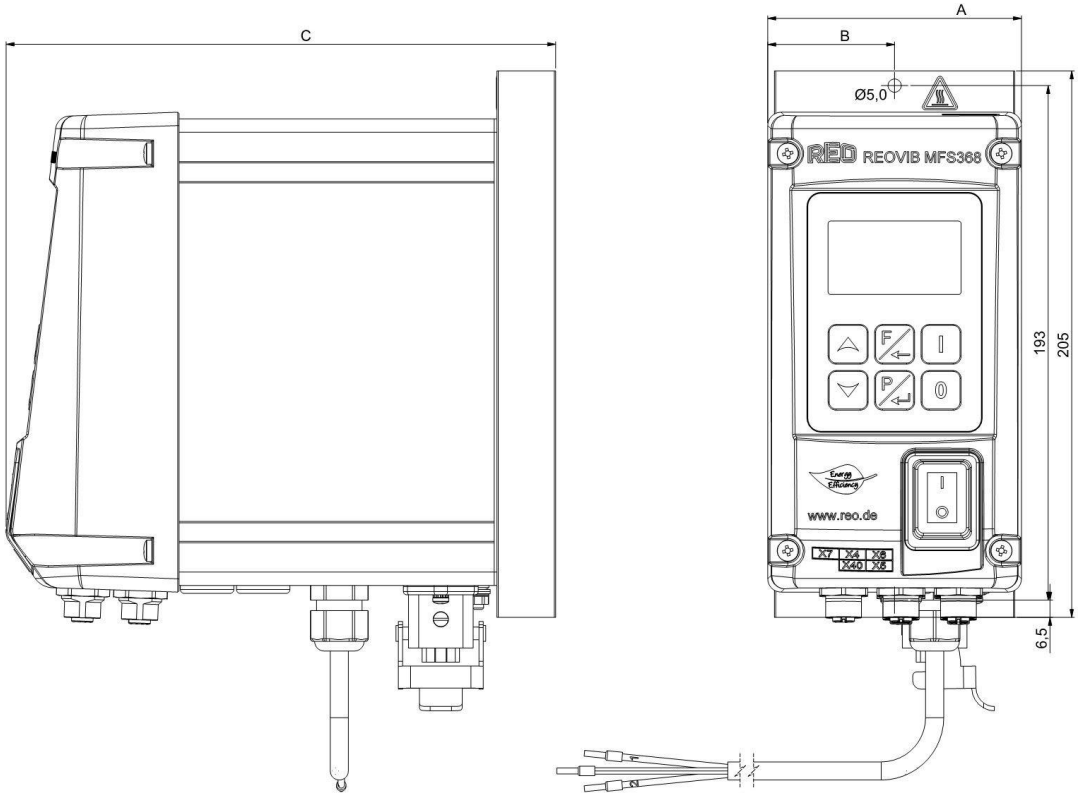

	3A	6A	8A
A	95	95	100
B	47,5	47,5	50
C	187	206	224

All Dimensions in [mm]

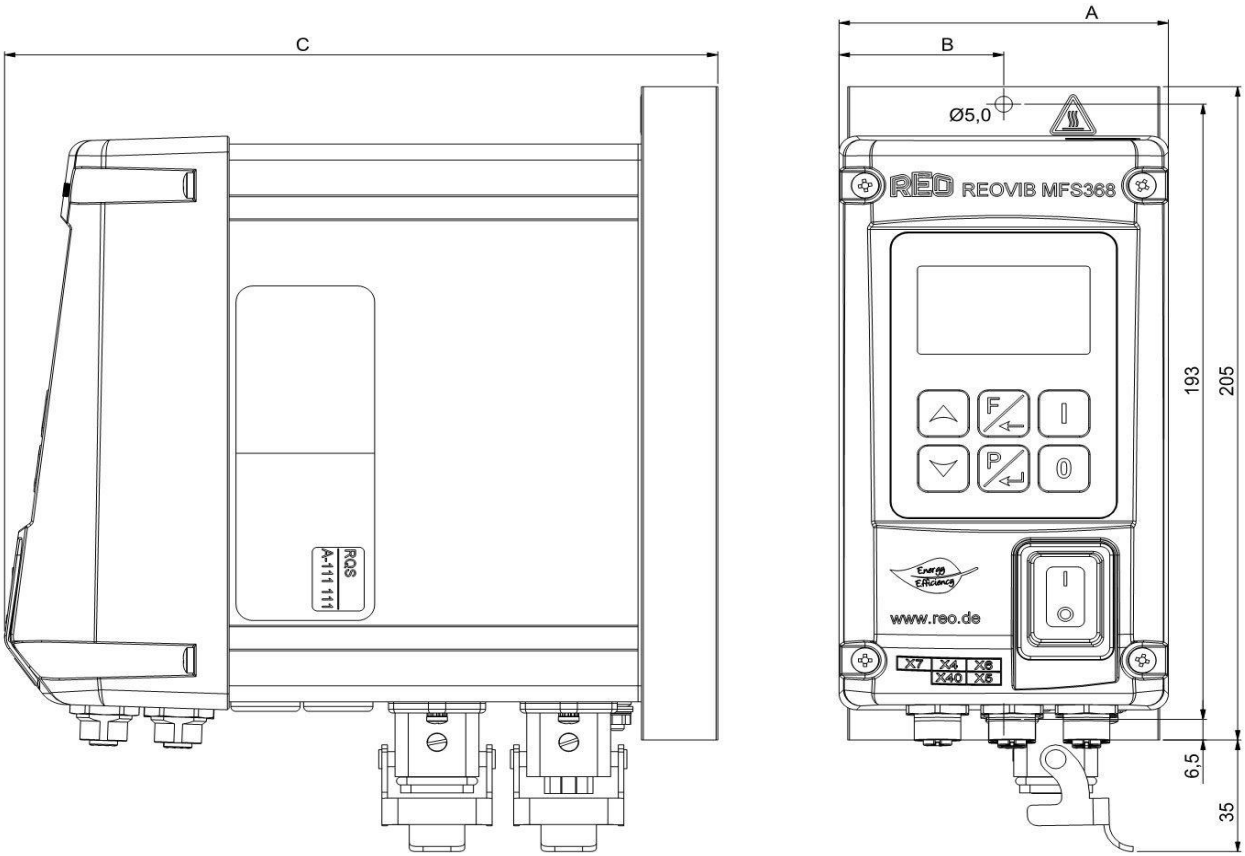

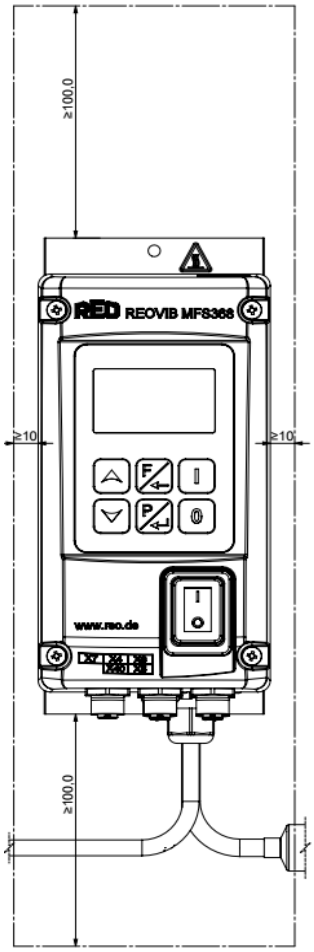

Installation Clearances

	3A	6A	8A
A	95	95	100
B	47,5	47,5	50
C	187	206	224

All Dimensions in [mm]

Control Cabinet Version IP 20

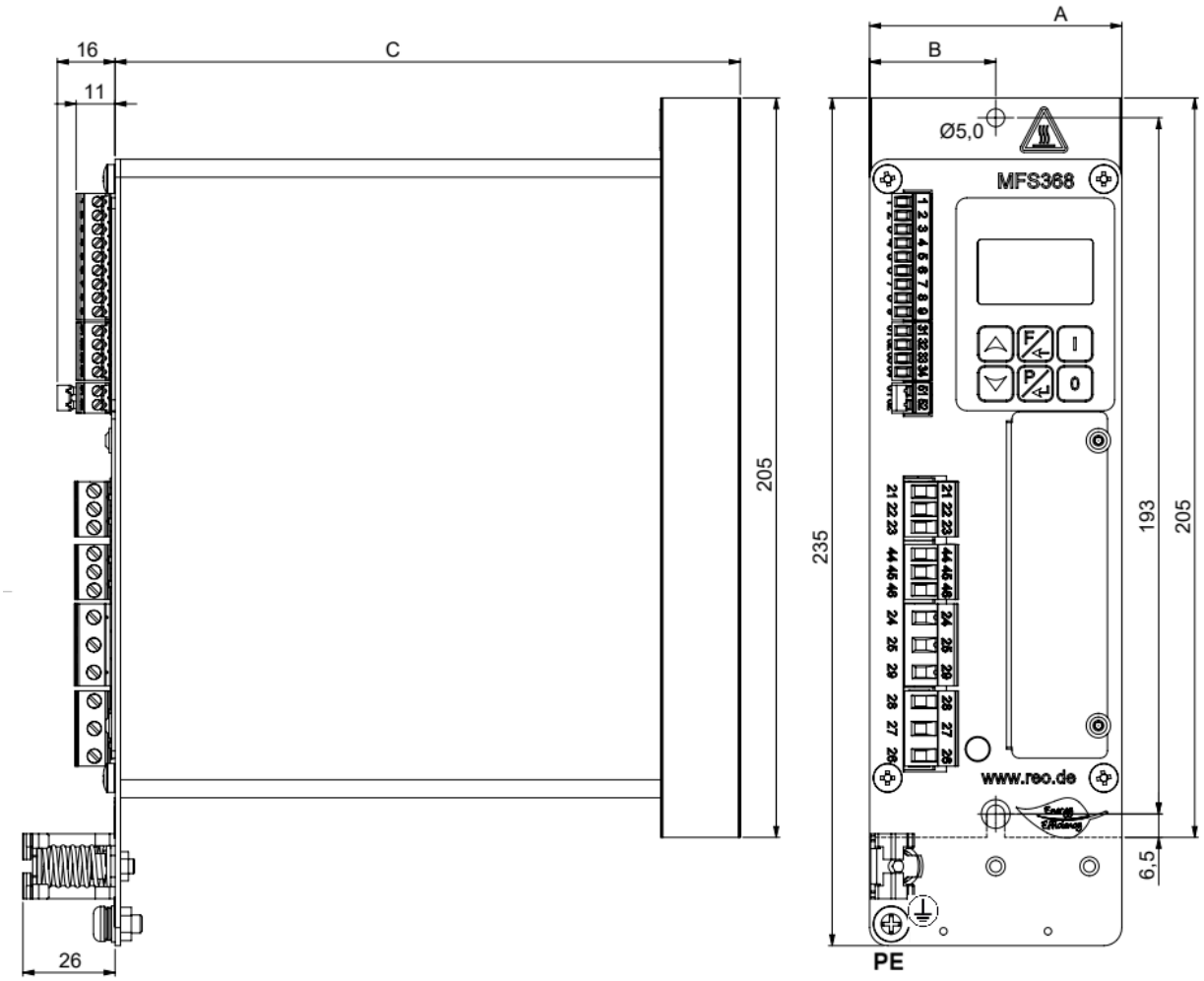

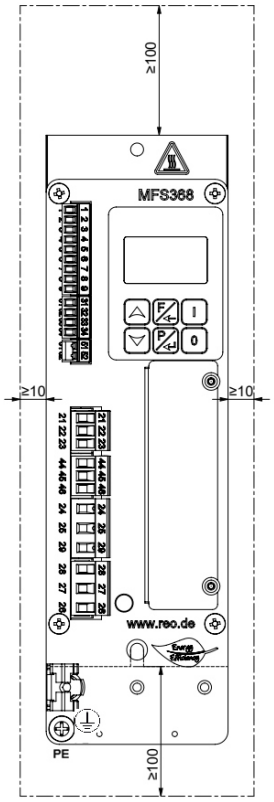

Installation Clearances

	3A	6A	8A
A	70	70	100
B	35	35	50
C	155	174	192

All Dimensions in [mm]

14.0 Installation Instructions

The unit is intended exclusively for installation on concrete or other **non-combustible** surfaces. The fastening screws (M4) must be tightened with a maximum tightening torque of 2.5 Nm.

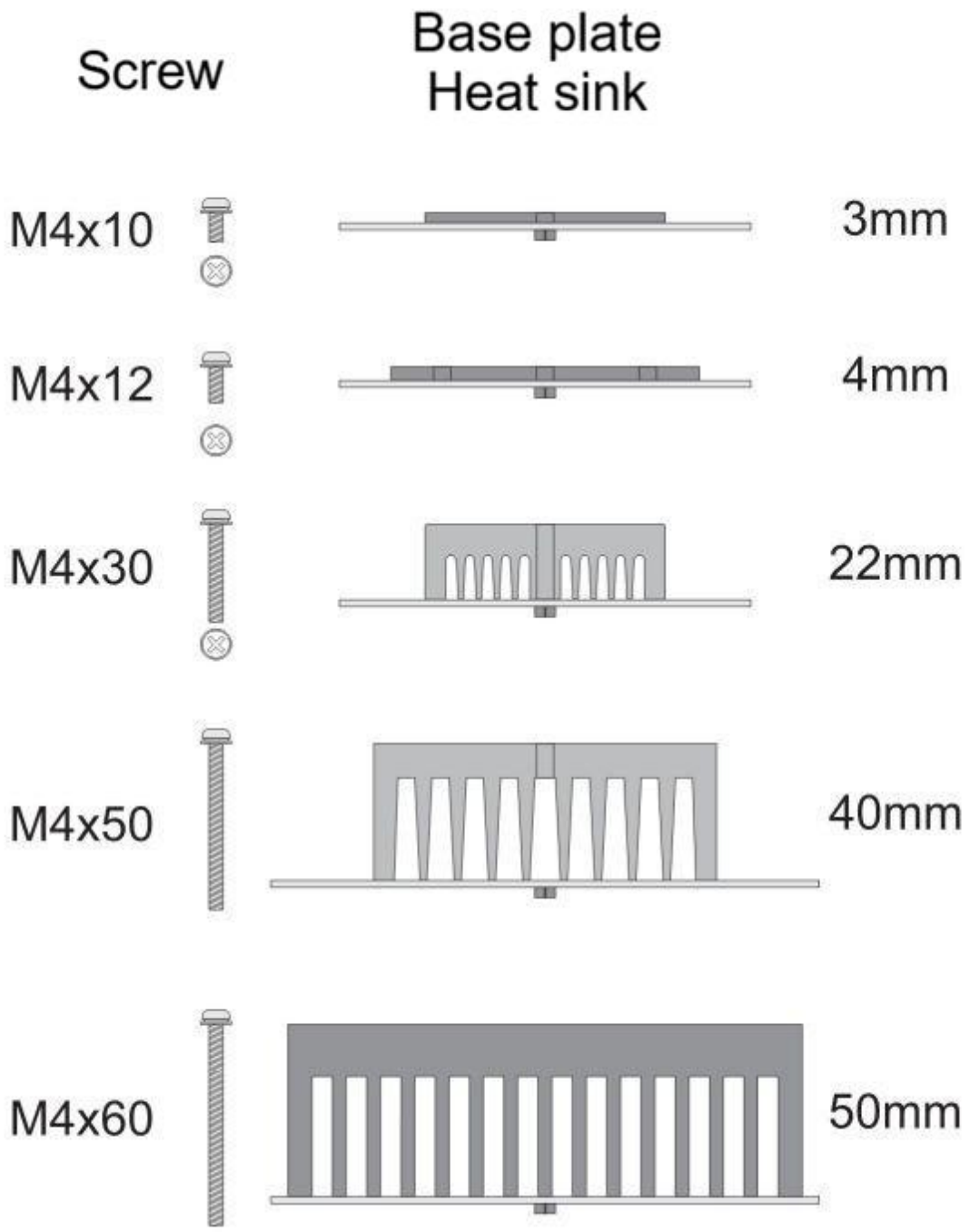

A 1.0 Accessories / Options / Spare Parts

Product	Ordering Number
Ferrite sleeve for output cable	900090171
Plug-in output cable with ferrite sleeve	900090359
Shield connection terminal KLBUE 3-8 SC	900090240
MEASUREMENT BOX 10A IP40 300V	200012201

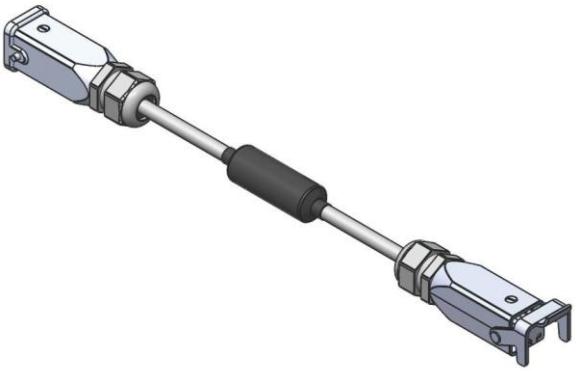

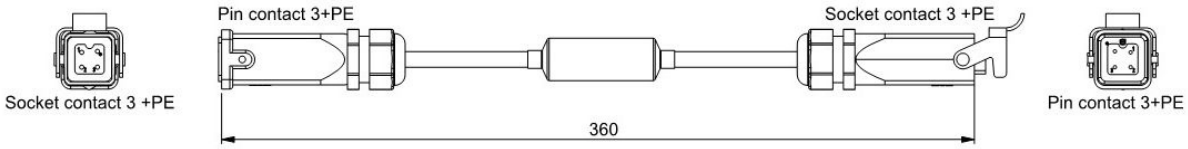

All Dimensions in [mm]

REO AG
Brühler Straße 100 · D-42657 Solingen
Tel.: +49 (0)212 8804 0 · Fax: +49 (0)212 8804 188

E-Mail: info@reo.de
Internet: www.reo.de

Divisions:

REO Vibratory Feeding and Power Electronics Division

REO Vibratory Feeding and Power Electronics Division
Brühler Straße 100 · D-42657 Solingen
Tel.: +49 (0)212 8804 0 · Fax: +49 (0)212 8804 188
E-Mail: info@reo.de

REO Train Technologies Division

REO Train Technologies Division
Erasmusstraße 14 · D-10553 Berlin
Tel.: +49 (0)30 3670236 0 · Fax: +49 (0)30 3670236 10
E-Mail: zentrale.berlin@reo.de

REO Drives Division

REO Drives Division
Holzhausener Straße 52
D-16866 Kyritz
Tel.: +49 (0)33971 485 0 · Fax: +49 (0)33971 485 90
E-Mail: zentrale.kyritz@reo.de

REO Medical and Current Transformer Division

REO Medical and Current Transformer Division
Schuldholzinger Weg 7 · D-84347 Pfarrkirchen
Tel.: +49 (0)8561 9886 0 · Fax: +49 (0)8561 9886 40
E-Mail: zentrale.pfarrkirchen@reo.de

REO Test and PowerQuality Division

REO Test and PowerQuality Division
Brühler Straße 100 · D-42657 Solingen
Tel.: +49 (0)212 8804 0 · Fax: +49 (0)212 8804 188
E-Mail: info@reo.de

PRODUCTION+SALES:

- India
  REO GPD INDUCTIVE COMPONENTS PVT. LTD
  E-Mail: info@reogpd.com · Internet: www.reo-ag.in
- USA
  REO-USA, Inc.
  E-Mail: info@reo-usa.com · Internet: www.reo-usa.com

SALES:

- France
  REO VARIAC S.A.R.L.
  E-Mail: reovariac@reo.fr · Internet: www.reo.fr
- Great Britain
  REO (UK) Ltd.
  E-Mail: main@reo.co.uk · Internet: www.reo.co.uk
- Italy
  REO ITALIA S.r.l.
  E-Mail: info@reoitalia.it · Internet: www.reoitalia.it
- Poland
  REO CROMA Sp.zo.o
  E-Mail: croma@croma.com.pl · Internet: www.croma.com.pl
- Spain
  REO ESPAÑA 2002 S.A.
  E-Mail: info@reospain.com · Internet: www.reospain.com
- Switzerland
  REO ELEKTRONIK AG
  E-Mail: info@reo.ch · Internet: www.reo.ch
- Turkey
  REOTURKEY ELEKTRONİK San. ve Tic. Ltd. Şti.
  E-Mail: info@reo-turkey.com · Internet: www.reo-turkey.com
- China
  REO Shanghai Inductive Components Co., Ltd
  E-Mail: info@reo.cn · Internet: www.reo.cn
- United Arab Emirates
  REO INDUCTIVE COMPONENTS FZCO
  E-Mail: info@reo-middle-east.com · Internet: www.reo-middle-east.com

For further information, please visit our website at WWW.REO.DE