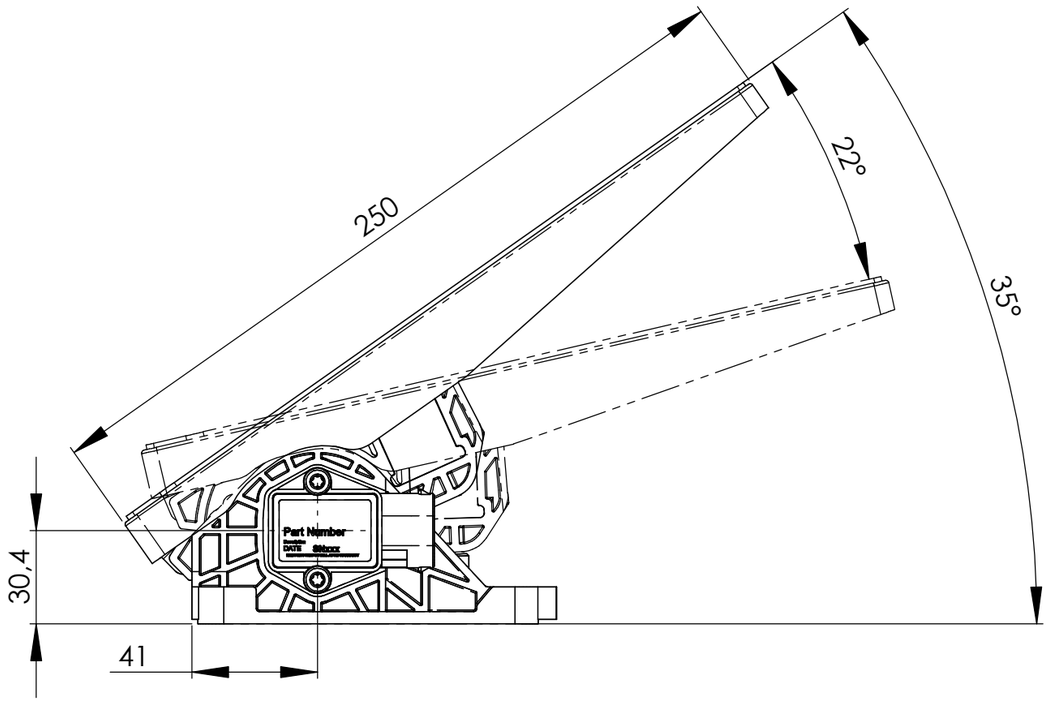

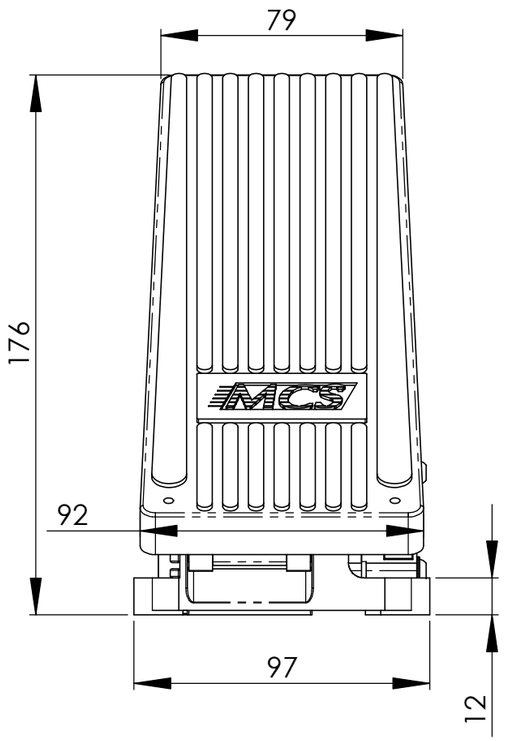

Sensor output signals:

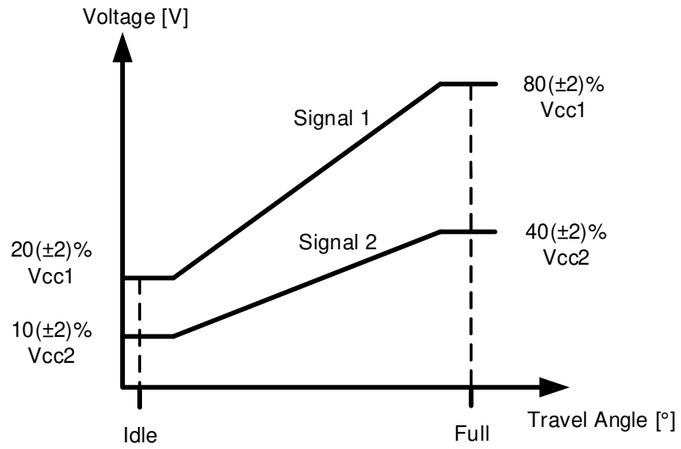

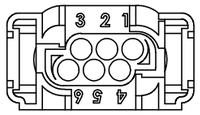

Wire side view

	FUNCTION	PIN N°
SIGNAL 1	Ana Vcc1 Supply +5V (+/-0,25V)	1
	Ana Ground 0V	2
	Ana Signal 20 - 80%Vcc1	4
SIGNAL 2	Ana Vcc2 Supply +5V (+/-0,25V)	6
	Ana Ground 0V	5
	Ana Signal 10 - 40%Vcc2	3

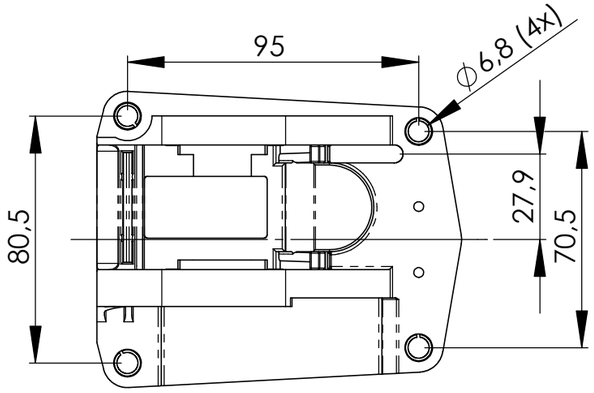

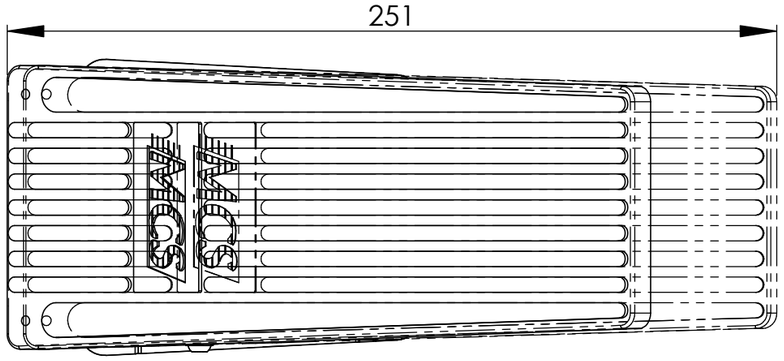

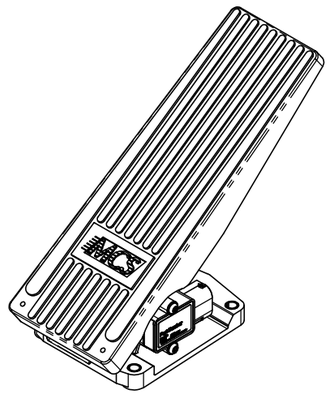

INCLUDED

COUNTER CONNECTOR KIT PN : **KTCN 0962 001**

Connector : AMP Nr. 1-967616-1 (x1)
Terminals : AMP Nr. 0-5962885-5 (x7)
Wire seal : AMP Nr. 0-0967067-1 (x6)

!!! WARNING !!!
Connect throttle sensor ground to engine ECU ground terminals only. DO NOT CONNECT TO CHASSIS GROUND

UNLESS OTHERWISE SPECIFIED:
DIMENSIONS ARE IN mm
TOLERANCES:
ISO 2768 - vL

TITLE:
Throttle Pedal 35°
Dual Ana

	NAME	CREATED DATE
DRAWN	RD	12/08/2024
CHK'D	SB	REV. DATE 12/08/2025

MCS MOBILE CONTROL SYSTEMS SA — A Member of the ADEPTECH Group

This drawing is confidential and remains the sole proprety of Mobile Control Systems S.A. This document is protected in accordance with the prevalling law.

PART NR:
965 135 M211

REV: **A**

SCALE:1:2

SHEET 1 OF 1

A3