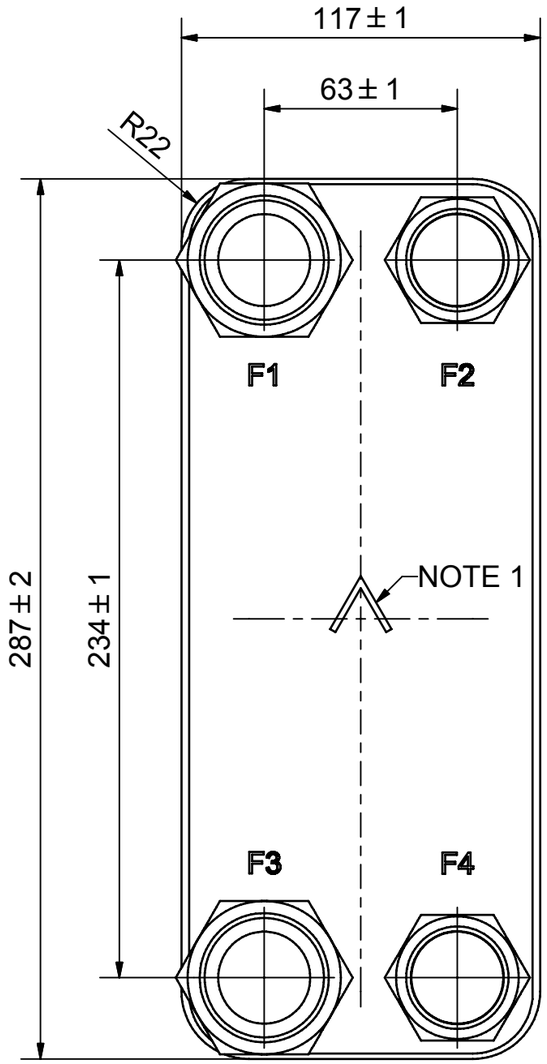

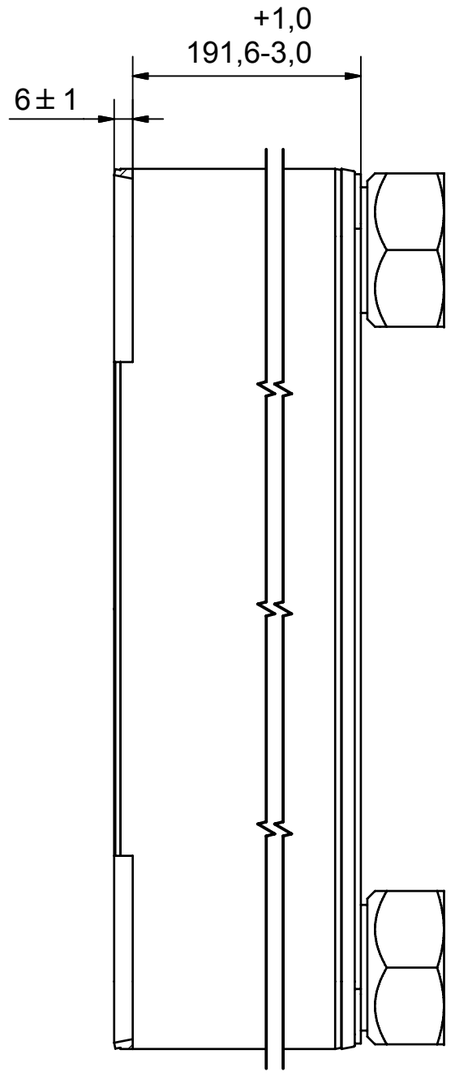

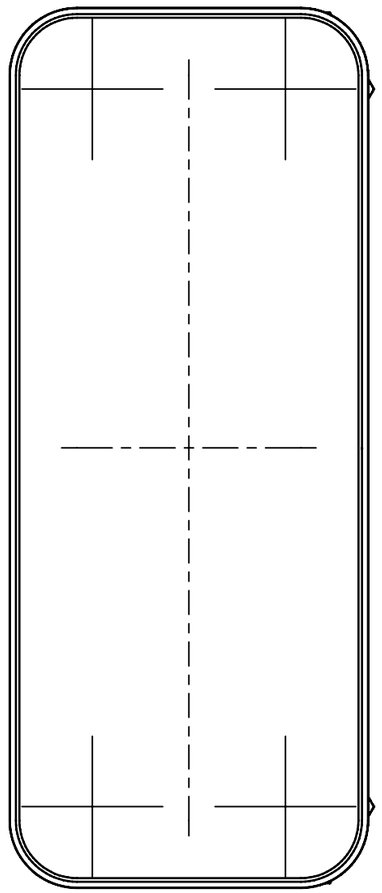

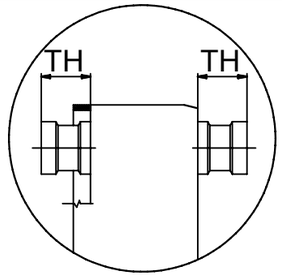

NOTE 1 ALTERNATE MARKING: STICKER OR STAMP

OLAER CZ

F1	46083	ISO-G 1 1/4 INT HEX, TH = 27,1	CD000318
F2	30187	ISO-G 1 INT HEX, TH = 27,1	CD000458
F3	46083	ISO-G 1 1/4 INT HEX, TH = 27,1	CD000318
F4	30187	ISO-G 1 INT HEX, TH = 27,1	CD000458

Title: B12Hx080/1P-SC-S 2*1 1/4" INT HEX+2*1"INT HEX

Created Date	Created By
2007-03-05	AU

Article/Configuration number	Drawing number
12034-080	AU00017123