G35 PRO SERIES

Maximum Flow Rate: 138 l/min (36.5 USgpm)
Maximum Pressure: 83 bar (1200 psi) for Metallic Pump Heads
17 bar (250 psi) for Non-metallic Pump Heads

WANNER™ HYDRA-CELL® PRO
SEAL-LESS PUMP TECHNOLOGIES

ATEX AVAILABLE

UK CA CE

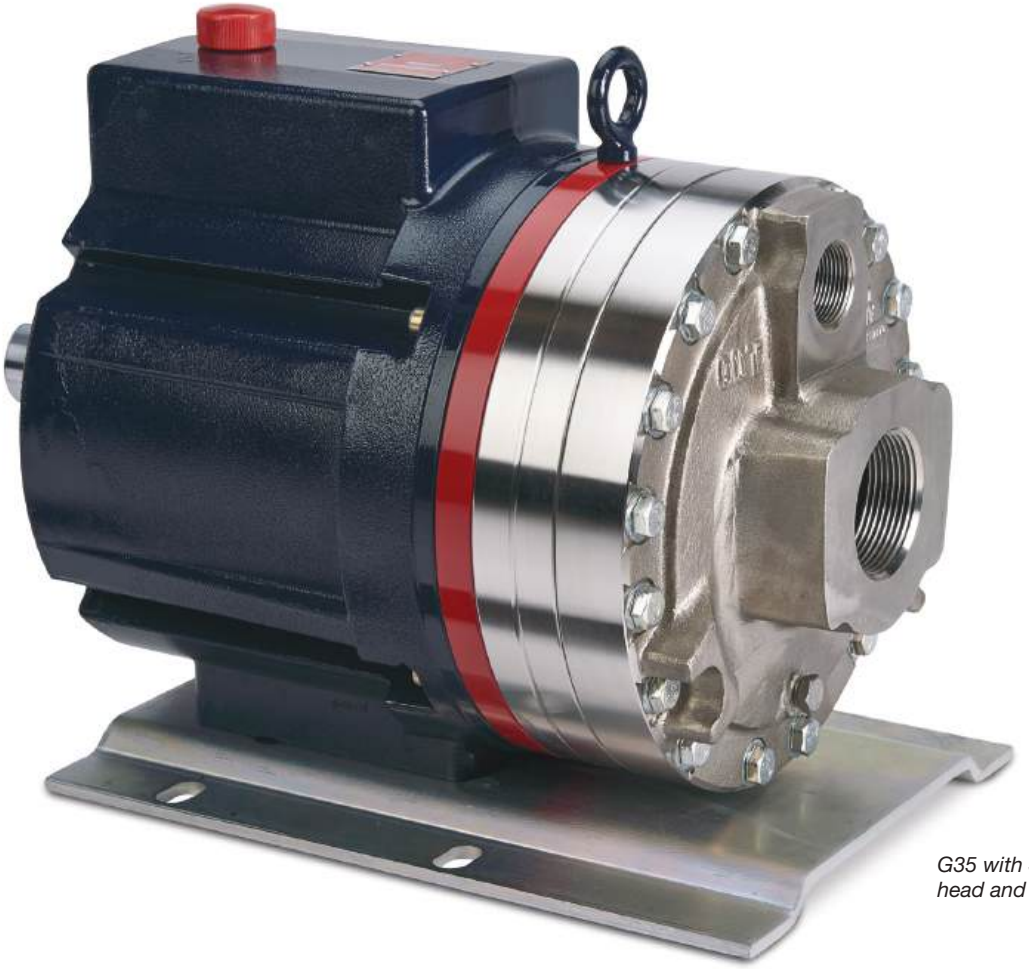

G35 with Stainless Steel pump head and BSPT threaded ports.

A higher standard of pump performance and energy efficiency.

- Integrates **Wanner Hydra-Cell® Pro** seal-less pump technologies for the highest levels of volumetric and energy efficiencies, up to 90% across the full rpm range.
- Reliably handles a wide range of viscosities and shear sensitivities, corrosive liquids, abrasives, slurries and suspended solids.
- No mechanical dynamic seals, packing, or cups to leak, wear or replace – reduces maintenance, costs and downtime.
- Can run dry indefinitely without damage to the pump.
- Seal-less design API 674 pumps that also exceed API 675 standards for accuracy, linearity and repeatability.
- Pumped media is 100% contained – prevents degradation, contamination and environmental risks.
- Patented ADPC (Advanced Diaphragm Position Control) and hydraulic oil management system protect diaphragms under closed or restricted inlet conditions.
- Reduced ownership costs – acquisition, operation, service, maintenance, and energy use.

Capacities

Model	Max. Input rpm	Max. Flow Capacities @83 bar (1200 psi)		Max. Inlet Pressure				Max. Discharge Pressure			
				Metallic Heads		Non-Metallic Heads		Metallic Heads		Non-Metallic Heads	
		l/min	USgpm	bar	psi	bar	psi	bar	psi	bar	psi
G35-X	1050	138	36.5	34	500	3.5	50	83	1200	17	250
G35-E	1150	129	34.0	34	500	3.5	50	83	1200	17	250

Performance and specification ratings apply to G35 configurations unless specifically noted otherwise.

*** Consult factory if operating above 83 bar (1200 psi).**

Metering & Dosing

API 675 Performance Characteristics of Steady State Accuracy ± 1%, Linearity ± 3% and Repeatability ± 3% can be achieved at speeds up to 960 rpm and pressures up to 69 bar (Metallic Head) and 24 bar (non-metallic pump heads)

Available to Meet API 674

Please contact Wanner International for further information.

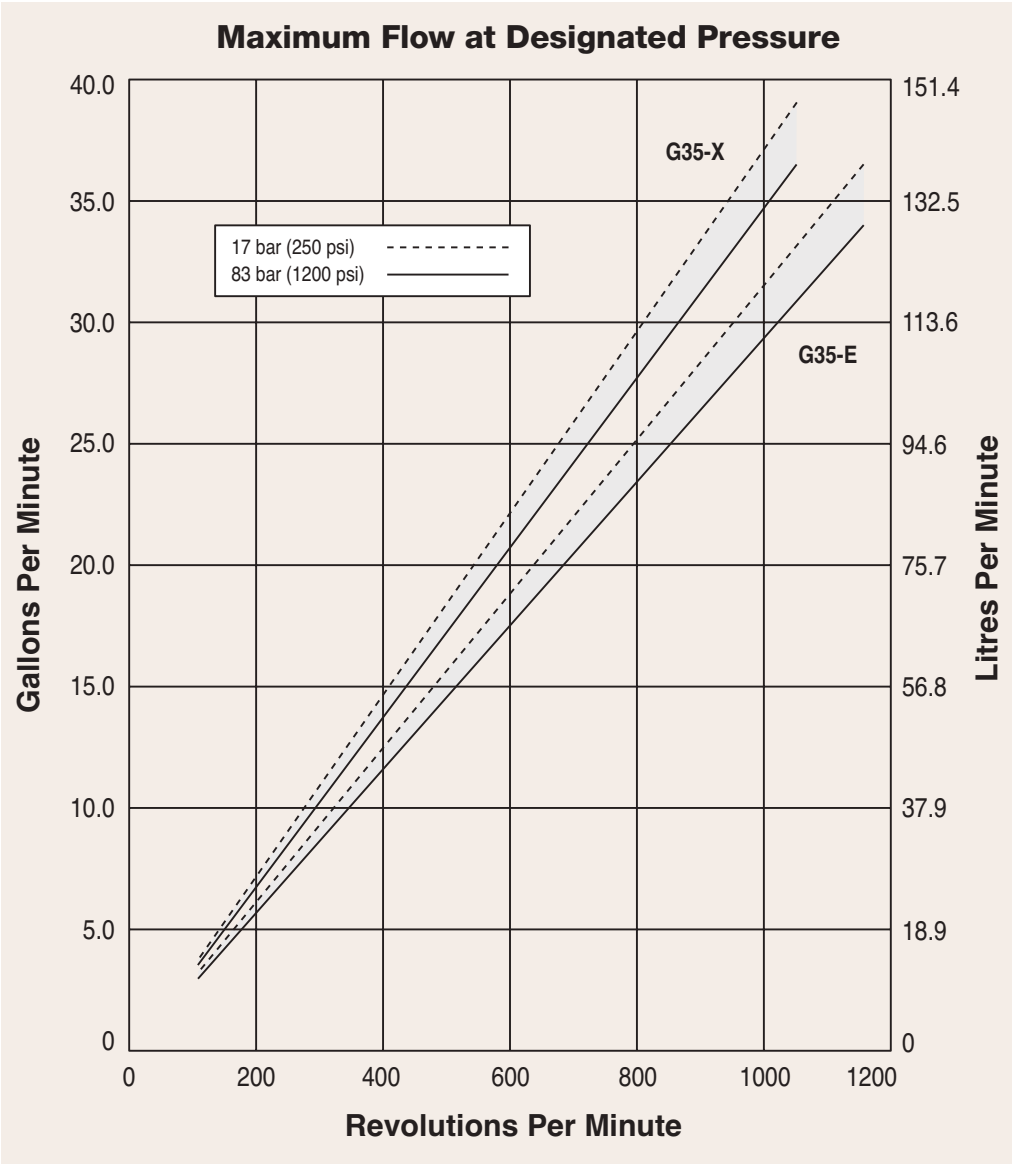

- True positive displacement pumping action achieves overall efficiency of >90%, targeting improvements at lower speeds and higher pressures.

Due to the Wanner Engineering Continuous Improvement Program, specifications and other data are subject to change.

Flow Capacities @ 83 bar (1200 psi) 6-pole Motor @ 50 Hz

Model	rpm	l/min	USgpm
G35-X	960	126.00	33.30
G35-E	960	107.00	28.40

Flow Capacities @ 83 bar (1200 psi) 8-pole Motor @ 50 Hz

Model	rpm	l/min	USgpm
G35-X	730	95.90	25.30
G35-E	730	81.80	21.60

Delivery @ 83 bar (1200 psi)

Model	litres/rev	gal/rev
G35-X	0.1314	0.0347
G35-E	0.1120	0.0296

Maximum Discharge Pressure

Metallic Heads: 83 bar (1200 psi) @ 1050 rpm max. (X cam)
83 bar (1200 psi) @ 1150 rpm max. (E cam)
103 Bar (1500psi) @ 700 rpm (X & E cam)

Non-metallic Heads: 17 bar (250 psi) Polypropylene

Maximum Inlet Pressure

Metallic Heads: 34 bar (500 psi)

Non-metallic Heads: 3.5 bar (50 psi)

Maximum Operating Temperatur

Metallic Heads: 121˚C (250˚F) - Consult factory for correct component selection for temperatures from 71˚C (160˚F) to 121˚C (250˚F).

Non-metallic Heads: 49˚C (120˚F) Polypropylene

Maximum Solids Size 800 microns

Inlet Port

Metallic Heads: 2-1/2 inch BSPT
2-1/2 inch NPT
150lb or 600lb ANSI RF Flange
3 inch SAE

Non-metallic Heads: 2-1/2 inch SAE J518

Discharge Port

Metallic Heads: 1-1/4 inch BSPT
1-1/4 inch NPT
600lb or 1500lb ANSI RF Flange
1-1/4 inch SAE

Non-metallic Heads: 1-1/2 inch SAE J518

Shaft Diameter 50.8 mm (2 inch)

Shaft Rotation Reverse (bi-directional)

Bearings Tapered roller bearings

Oil Capacity 7.3 litres (7.75 US quarts)

Weight

Metallic Heads: 116.6 kg (257 lbs.)

Non-metallic Heads: 87.6 kg (193 lbs.)

Calculating Required Power

$$\frac{100 \times rpm}{63{,}000} + \frac{gpm \times psi}{1{,}460} = \text{electric motor hp}$$

$$\frac{100 \times rpm}{84{,}428} + \frac{l/min \times bar}{511} = \text{electric motor kW}$$

Attention!
When using a variable frequency drive (VFD) controller, calculate the hp or kW at minimum and maximum pump speed to ensure the correct hp or kW motor is selected. Note that motor manufacturers typically de-rate the service factor to 1.0 when operating with a VFD.

Calculating Pulley Size

$$\frac{\text{motor pulley OD}}{\text{pump rpm}} = \frac{\text{pump pulley OD}}{\text{motor rpm}}$$

Net Positive Suction Head (NPSHr)

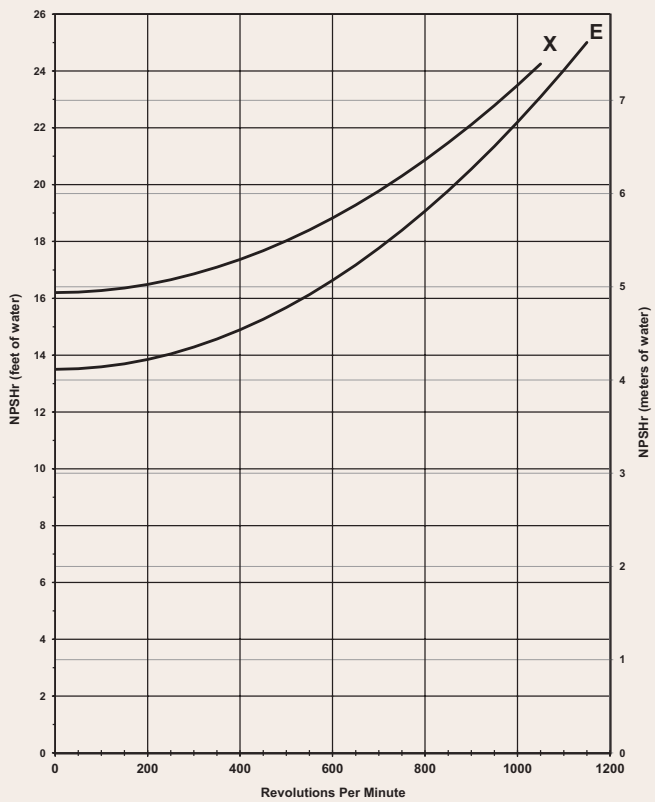

Suction Lift

Each Hydra-Cell pump has different lift capability depending on model size, cam angle, speed, and fluid characteristics. To ensure that your specific lift characteristics are met, refer to the inlet calculations regarding friction, and acceleration head losses in your Hydra-Cell Product Manual. Compare those calculations to the NPSHr curves above.

Due to the Wanner Engineering Continuous Improvement Program, specifications and other data are subject to change.

Baseplate Assembly Long-coupled for IEC 132 Motor Frame

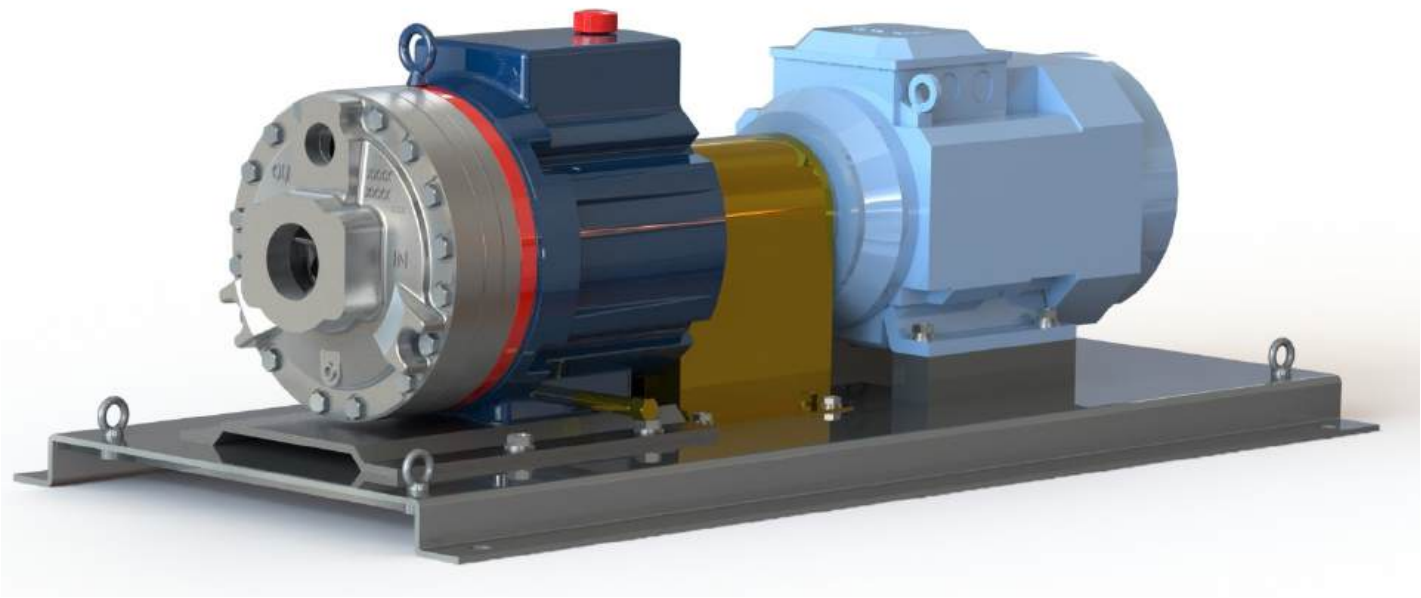

Dimensions in mm

G35 - IEC 132

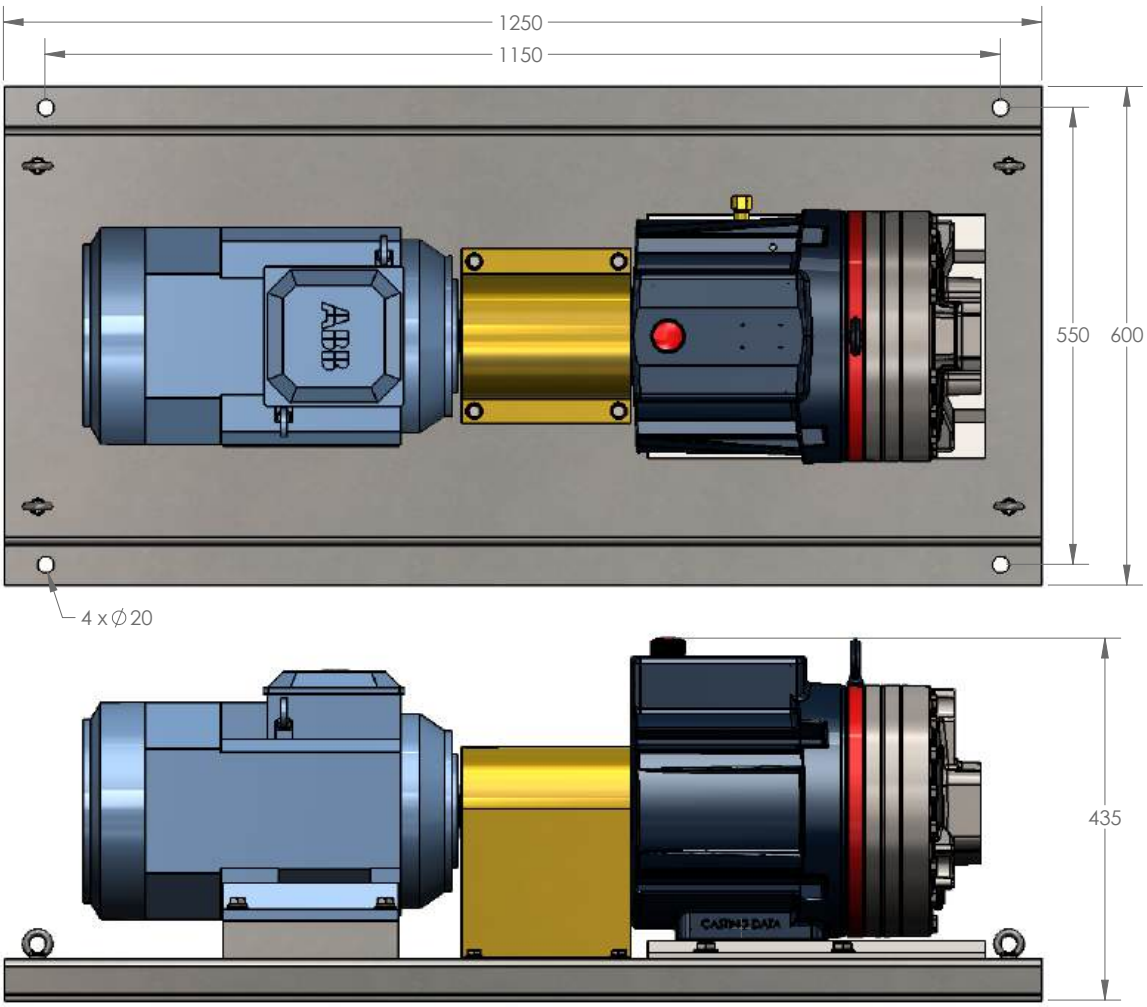

Unit Weight Approx - 261 Kg

Baseplate Assembly Long-coupled for IEC 160 Motor Frame

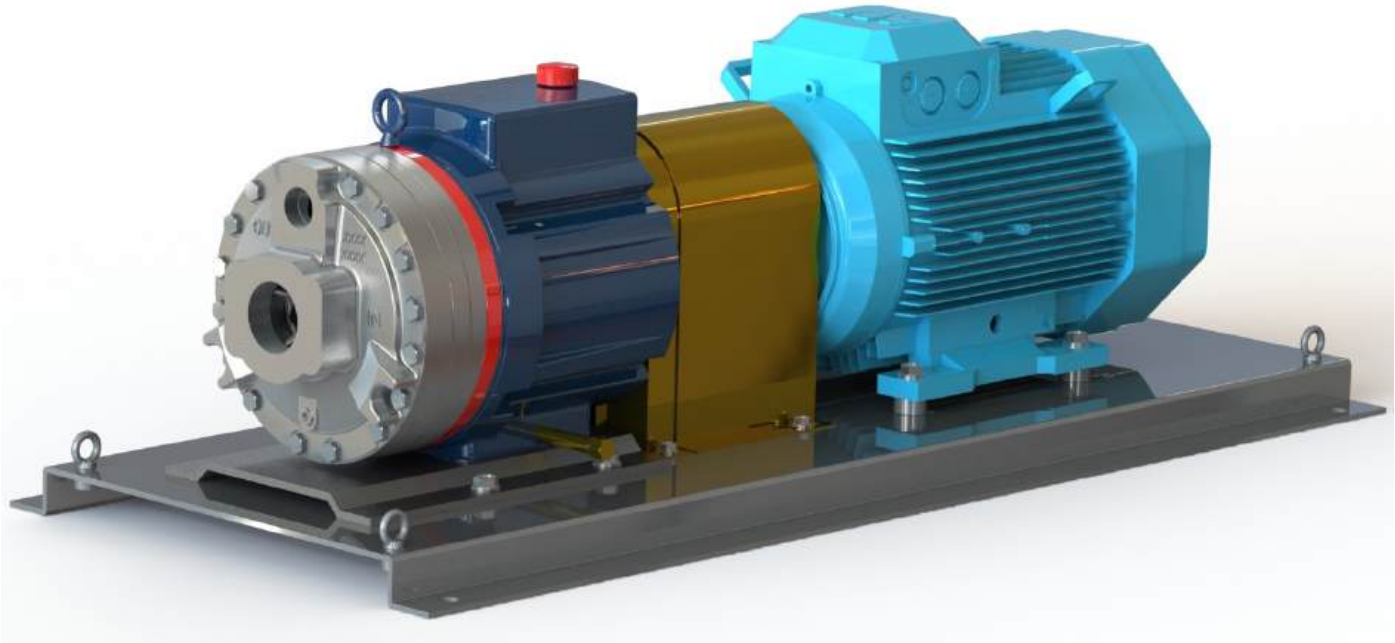

Dimensions in mm

G35 - IEC 160

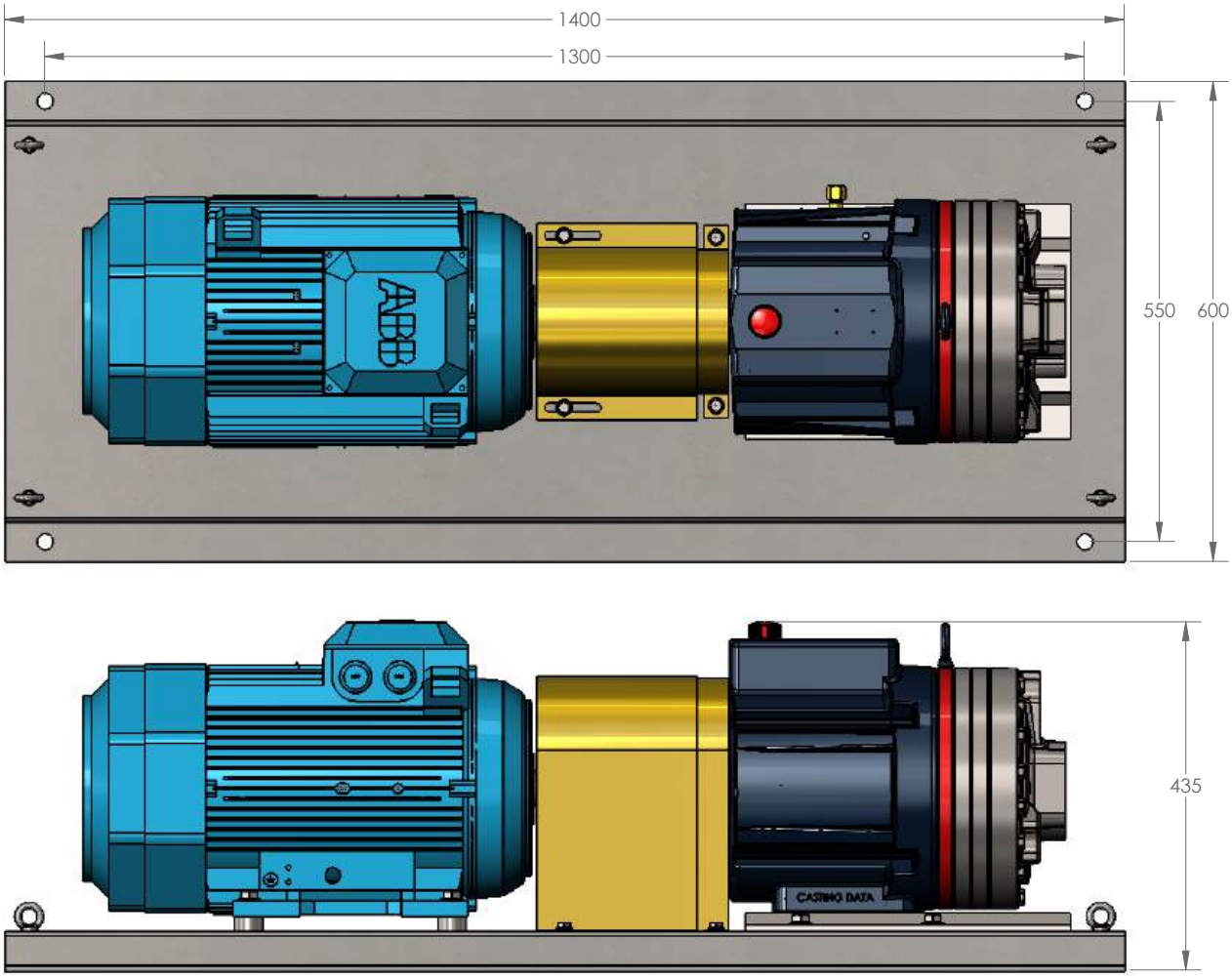

Unit Weight Approx - 358 Kg

Baseplate Assembly Long-coupled for IEC 180 Motor Frame

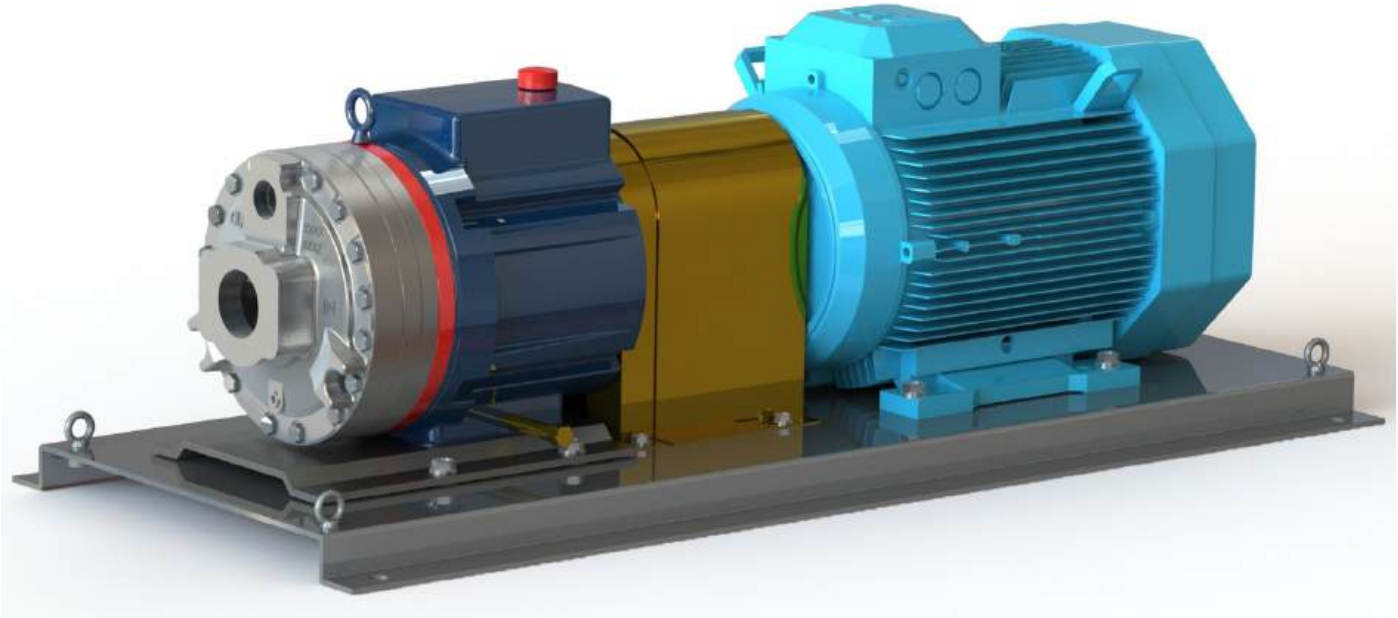

Dimensions in mm

G35 - IEC 180

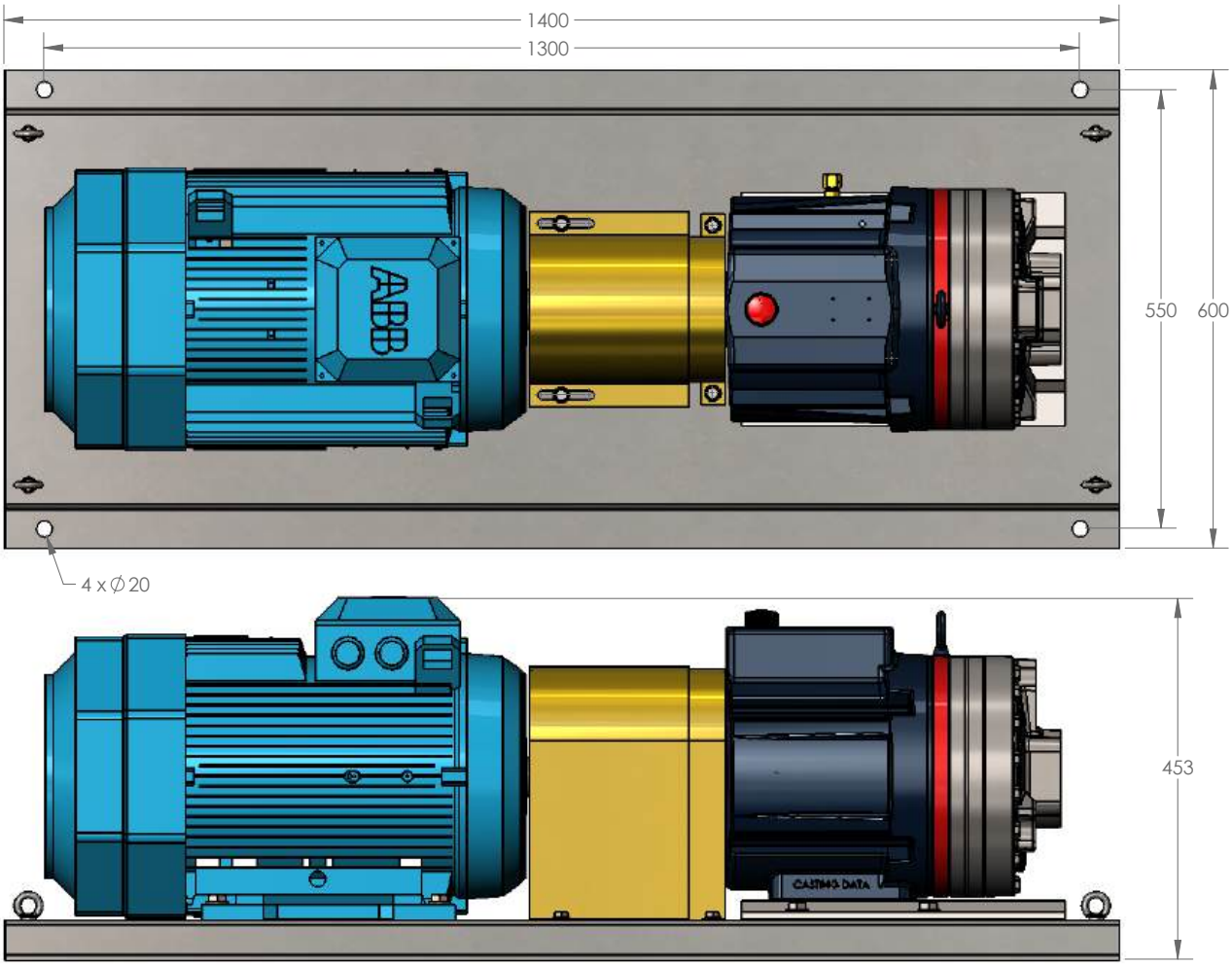

Unit Weight Approx - 393 Kg

Baseplate Assembly Long-coupled for IEC 200 Motor Frame

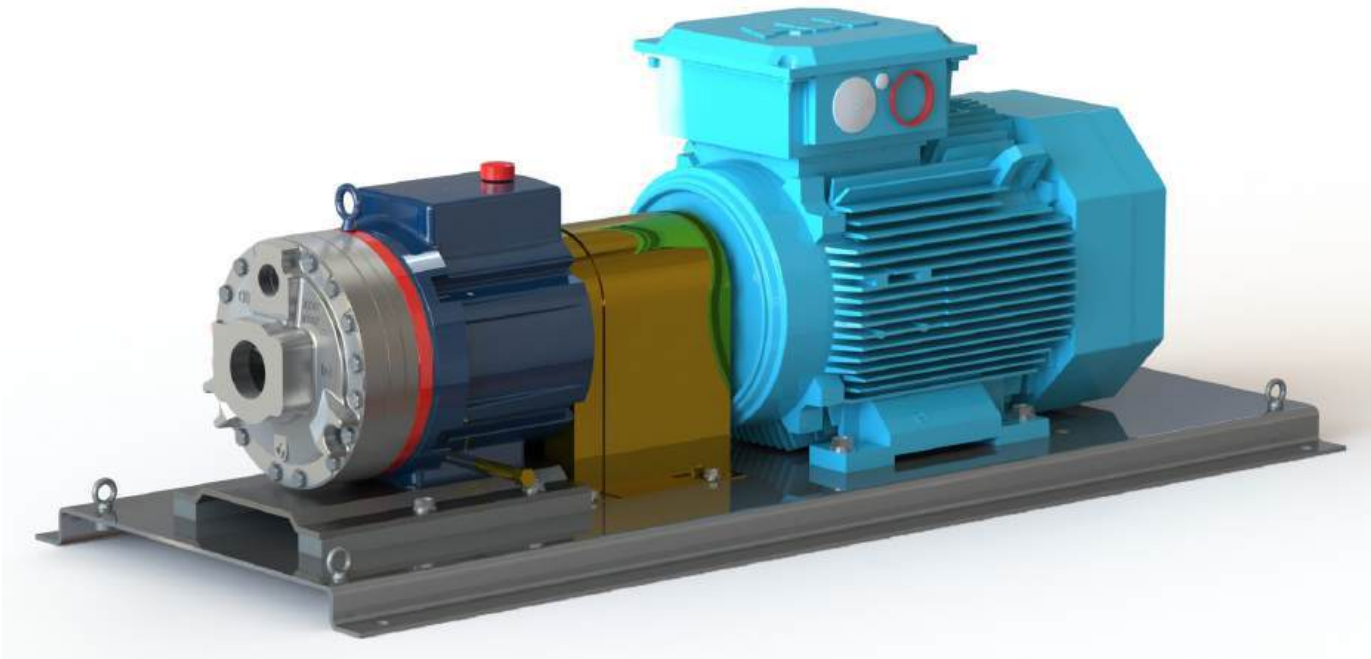

Dimensions in mm

G35 - IEC 200

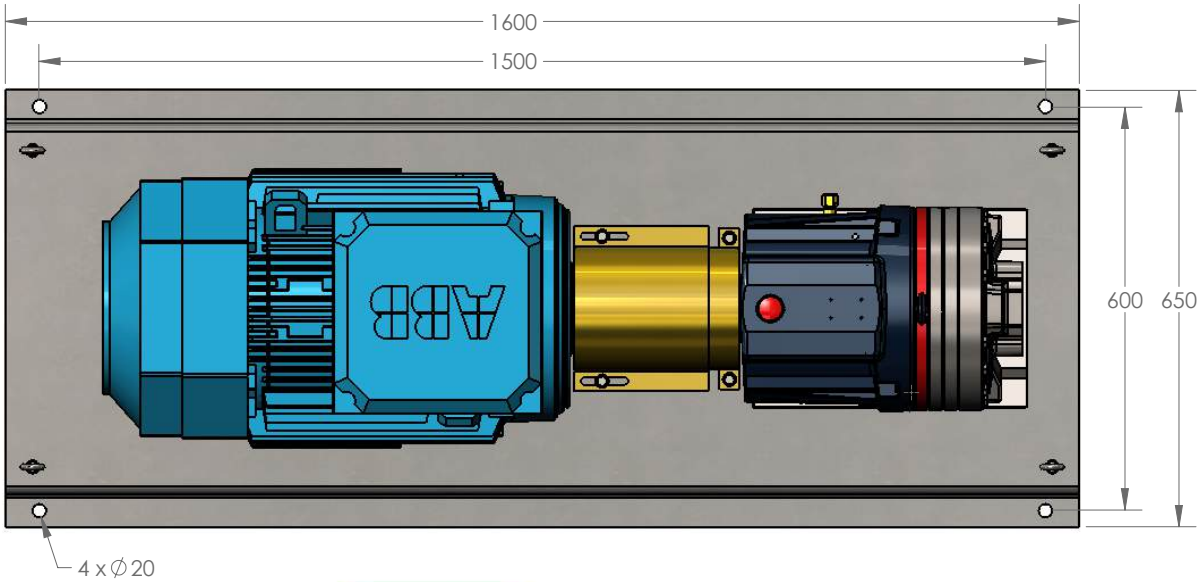

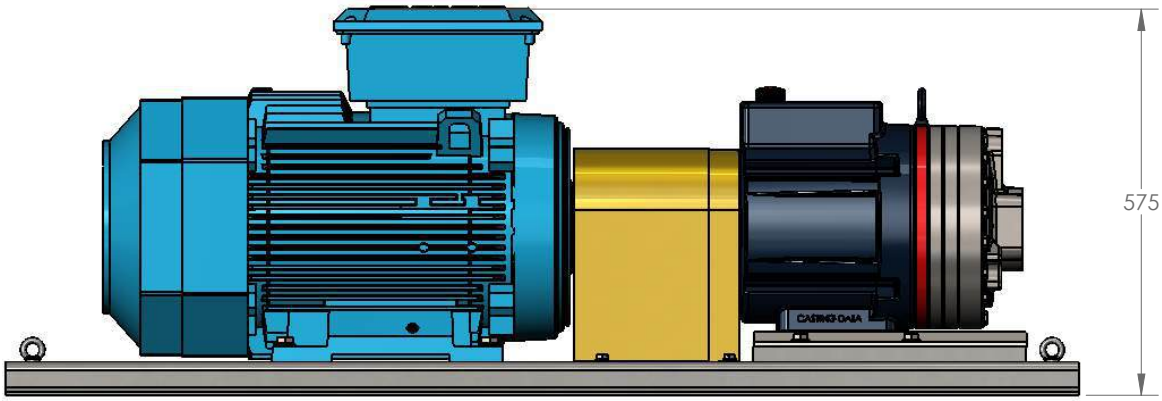

Unit Weight Approx - 488 Kg

Baseplate Assembly Long-coupled for IEC 225 Motor Frame

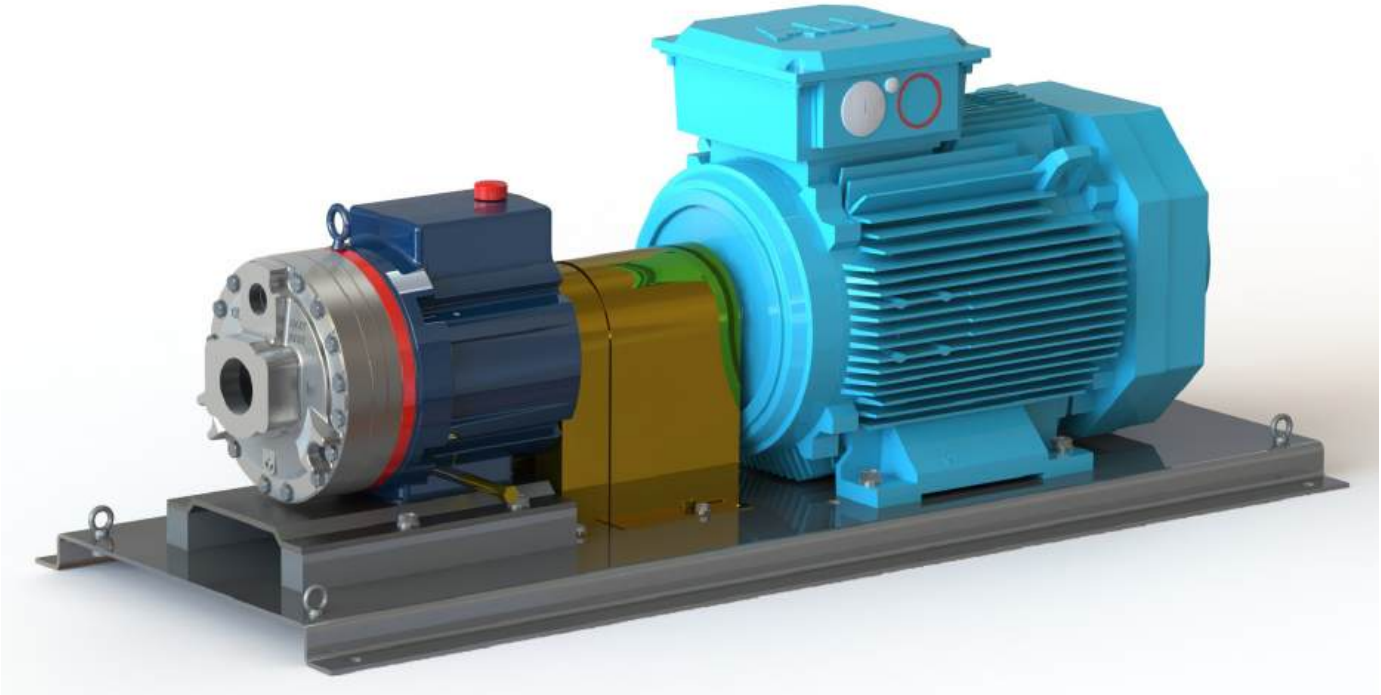

Dimensions in mm

G35 - IEC 225

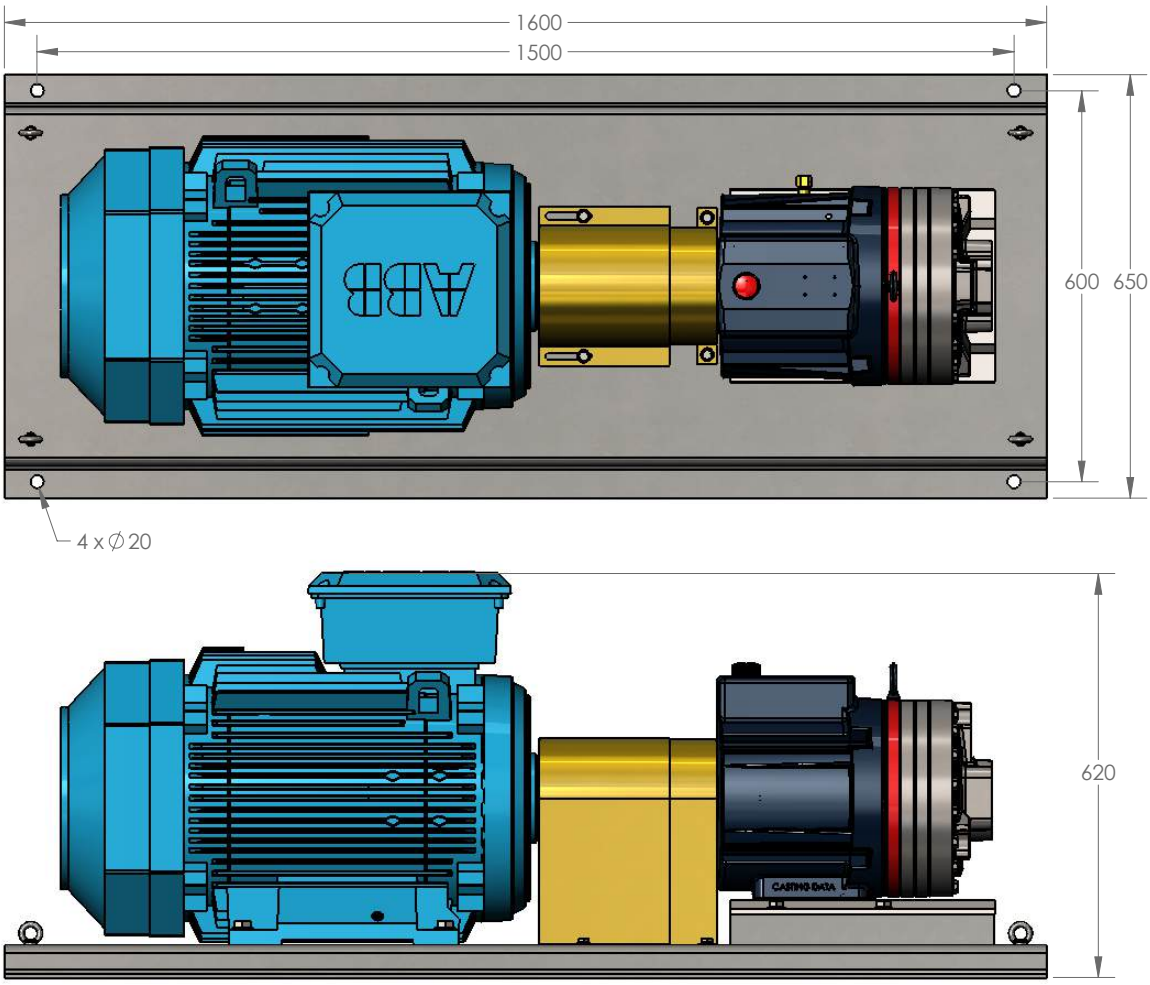

Unit Weight Approx - 546 Kg

G35 Models with BSPT Inlet/Outlet Ports mm (Inches)

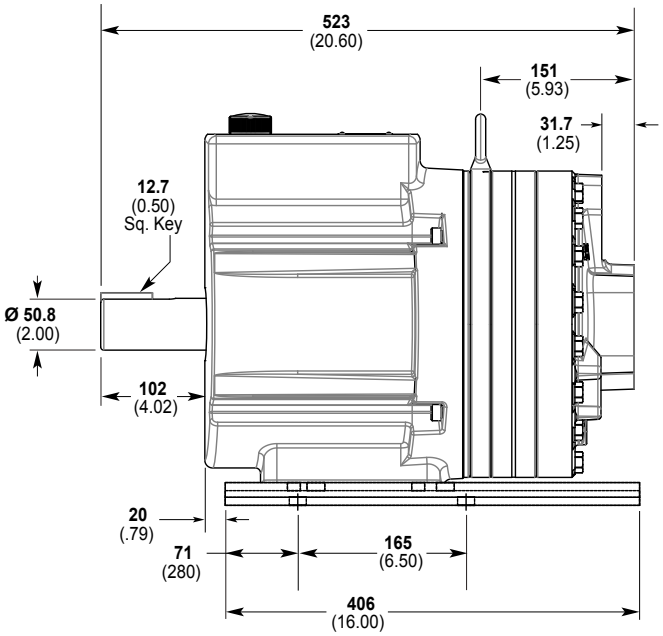

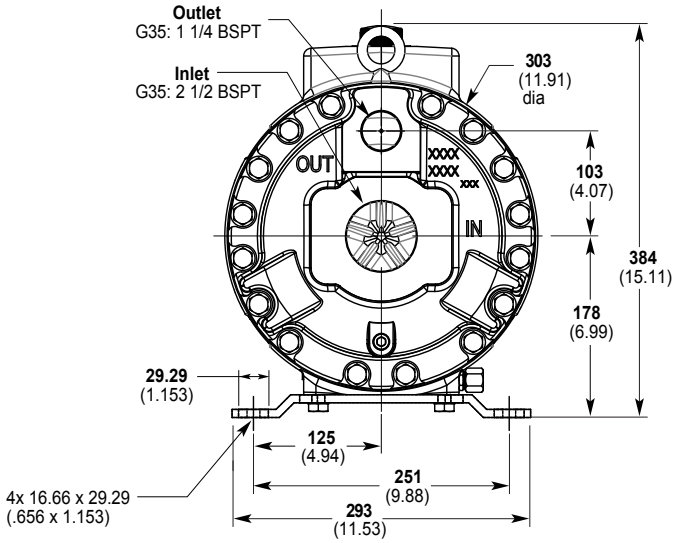

G35 Models with SAE Flange Inlet/Outlet Ports mm (Inches)

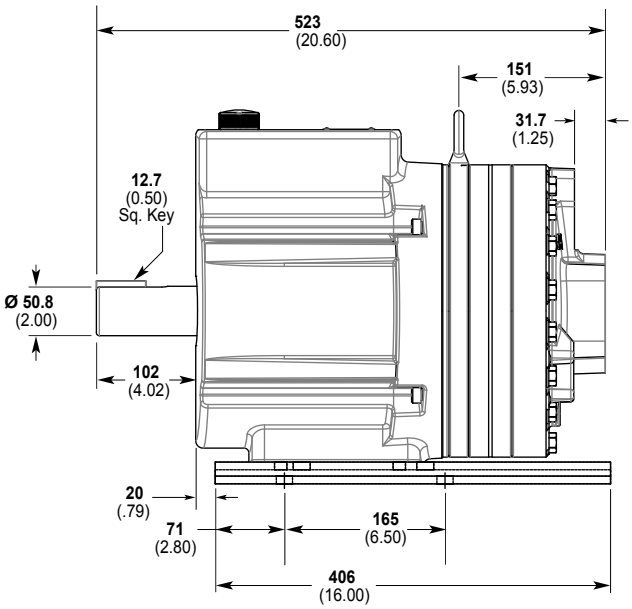

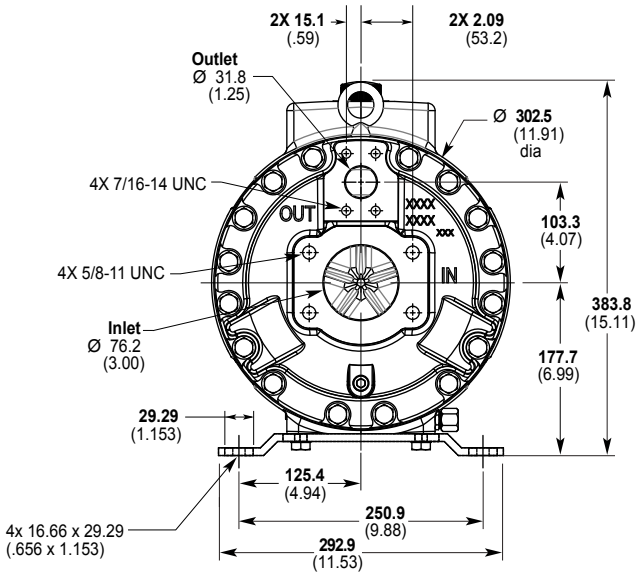

Note: Dimensions are for reference only. Contact factory for certified drawings.

G35 Non-metallic Pump Head with SAE Flange Inlet/Outlet Ports
mm (Inches)

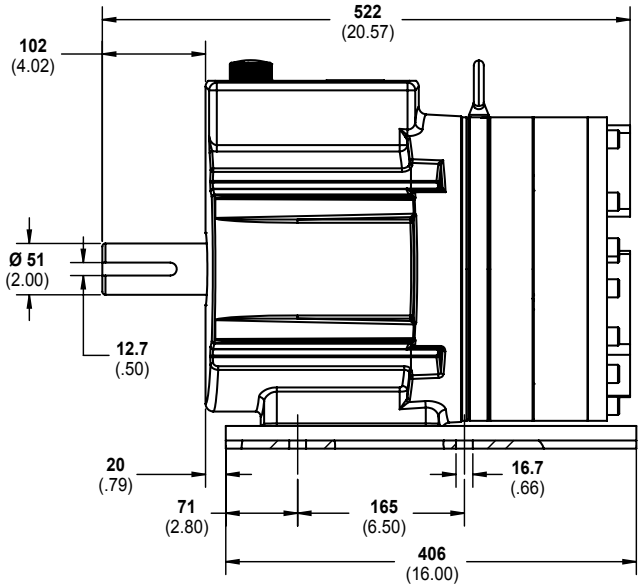

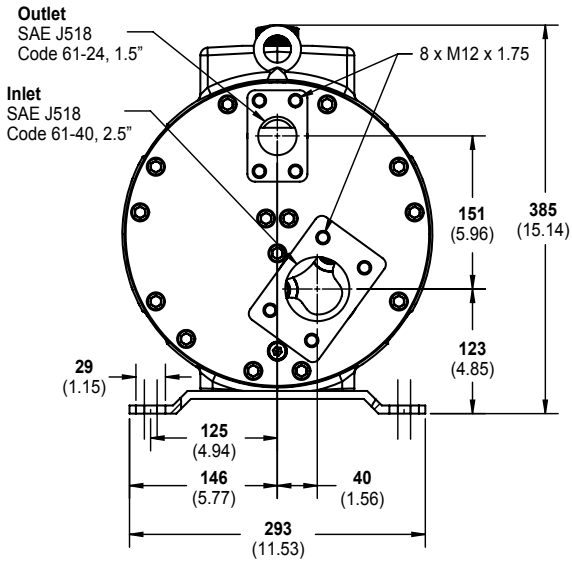

G35 Models with ANSI RF Flange Inlet/Outlet Ports mm (Inches)

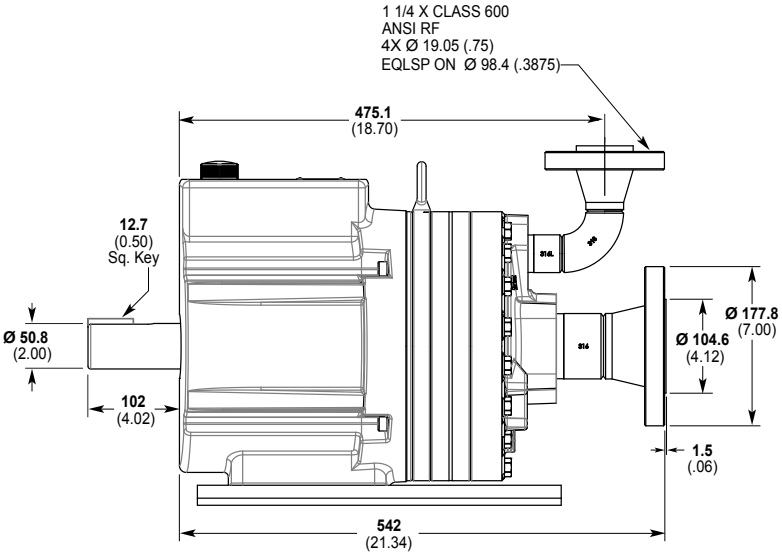

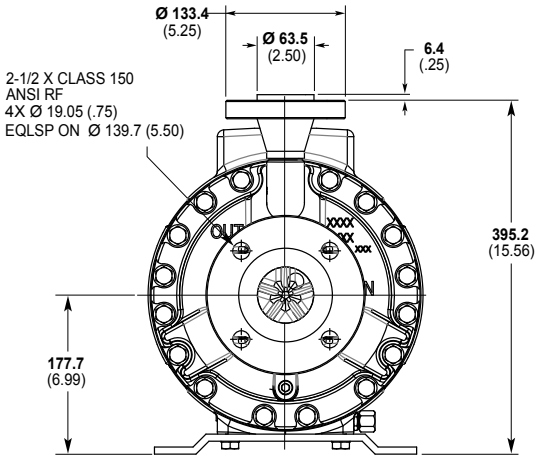

Valve Selection

A seal-less **C64 Pressure Regulating Valve** is recommended for Hydra-Cell G35 pumping systems, especially for high-pressure requirements or when handling dirty fluids.

A **C24 Pressure Regulating Valve** provides a capable, lower-cost alternative to C64 valves for Hydra-Cell G35 pumping systems.

Note: Dimensions are for reference only. Contact factory for certified drawings.

Contact Wanner International for:

- Motors, bases, couplings and other pump accessories
- Hydra-Oil selection and specification information
- Design considerations, installation guidelines, and other technical assistance in pump selection
- Process liquid end built with NACE and 3.1 traceable material certification

G35 with with 316L Stainless Steel pump head.

G35 with Brass pump head.

G35 with Polypropylene pump head.

G35 with 316L Stainless Steel pump head and ANSI flanges.

Ordering Information

A complete G35 Series Model Number contains 12 digits including 10 customer-specified design and materials options, for example: G35XKBTHFECA.

1	2	3	4	5	6	7	8	9	10	11	12
	3	5									

Digit	Order Code	Description
1-3		**Pump Configuration**
	G35	Shaft-driven (BSPT Ports)
	D35	Shaft-driven (NPT Ports or ANSI Flanges or SAE Flanged Ports)
4		**Hydraulic End Cam**
	X	Max 138 l/min (36.5 USgpm) @ 1050 rpm
	E	Max 129 l/min (34.0 USgpm) @ 1150 rpm
5		**Pump Head Version**
	P	Hydra-Cell Pro
	E	Hydra-Cell Pro SAE Flanged Ports
		See lower right for ATEX Certification Kit Options.
6		**Pump Head Material**
	B	Brass
	C	Ductile Iron (Nickel-plated)
	G	Duplex Alloy 2205 Stainless Steel (with Hastelloy C followers & follower screws)
	S	316L Stainless Steel (Threaded or SAE Ports)
	N	Polypropylene (with Hastelloy C screws & follower screws) SAE Flanges only *ATEX not available for Polypropylene pump heads.*
	R	316L Stainless Steel ANSI flange class 150 x 600
	-	316L Stainless Steel standard manifold with custom ANSI or DIN flange options, contact Wanner international with flange specification for part number.
	T	Hastelloy CW12MW
7		**Diaphragm & O-ring Material**
	A	Aflas diaphragm / PTFE o-ring
	E	EPDM (requires EPDM-compatible oil - Digit 12 oil code D)
	G	FKM
	J	PTFE (available with E cam only; 960 rpm max)
	K	FFKM diaphragm / PTFE o-ring
	P	Neoprene
	T	Buna-N
8		**Valve Seat Material**
	C	Ceramic
	D	Tungsten Carbide (900 rpm max.)
	H	17-4 Stainless Steel
	N	Nitronic 50
	T	Hastelloy C

Digit	Order Code	Description
9		**Valve Material**
	C	Ceramic
	D	Tungsten Carbide (900 rpm max.)
	F	17-4 Stainless Steel
	N	Nitronic 50
	T	Hastelloy C
10		**Valve Springs**
	E	Elgiloy
	T	Hastelloy C
11		**Valve Spring Retainers**
	C	Celcon
	H	17-7 Stainless Steel (used with metallic heads only)
	M	PVDF
	P	Polypropylene
	T	Hastelloy C (used with metallic heads only)
	Y	Nylon (Zytel)
12		**Hydra-Oil**
	A	10W30 standard-duty oil
	B	40-wt for continuous-duty oil (use with 316L SST or Hastelloy CW12MW pump head - standard)
	D	EPDM-compatible oil
	E	Food-contact oil
	G	5W30 cold-temp severe-duty synthetic oil
	H	15W50 high-temp severe-duty synthetic oil

G35 Pump Housing is standard as Cast Aluminum.
Upgrade to Ductile Iron available.

ATEX Certification Kit Options

As a separate line on your order, please add the required ATEX Certification Kit Option.

– ATEX 2014/34/EU Certified, Category 2, Zone 1

– ATEX 2014/34/EU Certified, Category 3, Zone 2

- *All options include Certificate, Oil Level Monitor or Sight Glass, Earth Stud & Secondary ATEX Label.*
- *Extra oil is required to fill the oil bowl during installation of ATEX pumps. This oil is not included and must be ordered separately.*
- *ATEX is not available with non-metallic pump heads.*

WANNER™ HYDRA-CELL® PRO
SEAL-LESS PUMP TECHNOLOGIES

Partners in over 70 countries

WANNER™
Global Sales and Technical Support

Americas
- Minneapolis, Minnesota USA
- Wichita Falls, Texas USA
- São Paulo, Brazil
- Buenos Aires, Argentina

EMEA | Australia
- Hampshire, United Kingdom
- Cairo, Egypt
- Düsseldorf, Germany
- Lyon, France

Asia | Pacific
- Kowloon, Hong Kong
- Shanghai, China
- Jakarta, Indonesia

India
- Mumbai, India
- New Delhi
- Bangalore
- Gujarat

Wanner worldwide

GLOBAL SALES & TECHNICAL SUPPORT

WANNER ENGINEERING, INC.
WORLD HEADQUARTERS & MANUFACTURING

Minneapolis, Minnesota USA
t: 612-332-5681
e: sales@wannereng.com
Hydra-Cell.com

REGIONAL OFFICE
Wichita Falls, Texas USA
t: 940-322-7111
e: sales@wannereng.com

LATIN AMERICAN OFFICE
São Paulo, Brazil
t: +55 (11) 99582-1969
e: mmagoni@wannereng.com
Hydra-Cell-Pumps.com.br

WANNER INTERNATIONAL, LTD.
UNITED KINGDOM

Church Crookham, Hampshire UK
t: +44 (0) 1252 816847
e: support@wannerint.com
Hydra-Cell.co.uk

WANNER PUMPS, LTD.
Kowloon, HONG KONG
t: +852 3428 6534
e: sales@wannerpumps.com
WannerPumps.com

Shanghai, CHINA
t: +86-21-6876 3700
e: sales@wannerpumps.com
WannerPumps.com

WANNER INDIA PVT. LTD.
Mumbai, INDIA
t: +91 (22) 22044766
e: support@wannerindia.com
WannerIndia.com

WANNER™

Copyright© 2024. Wanner Engineering, Inc. All rights reserved. WANNER™ and Hydra-Cell® are registered trademarks.
All material contained are protected by copyright under US copyright law, international conventions and other copyright laws.

HCP G35 WI | 21 Mar 2025