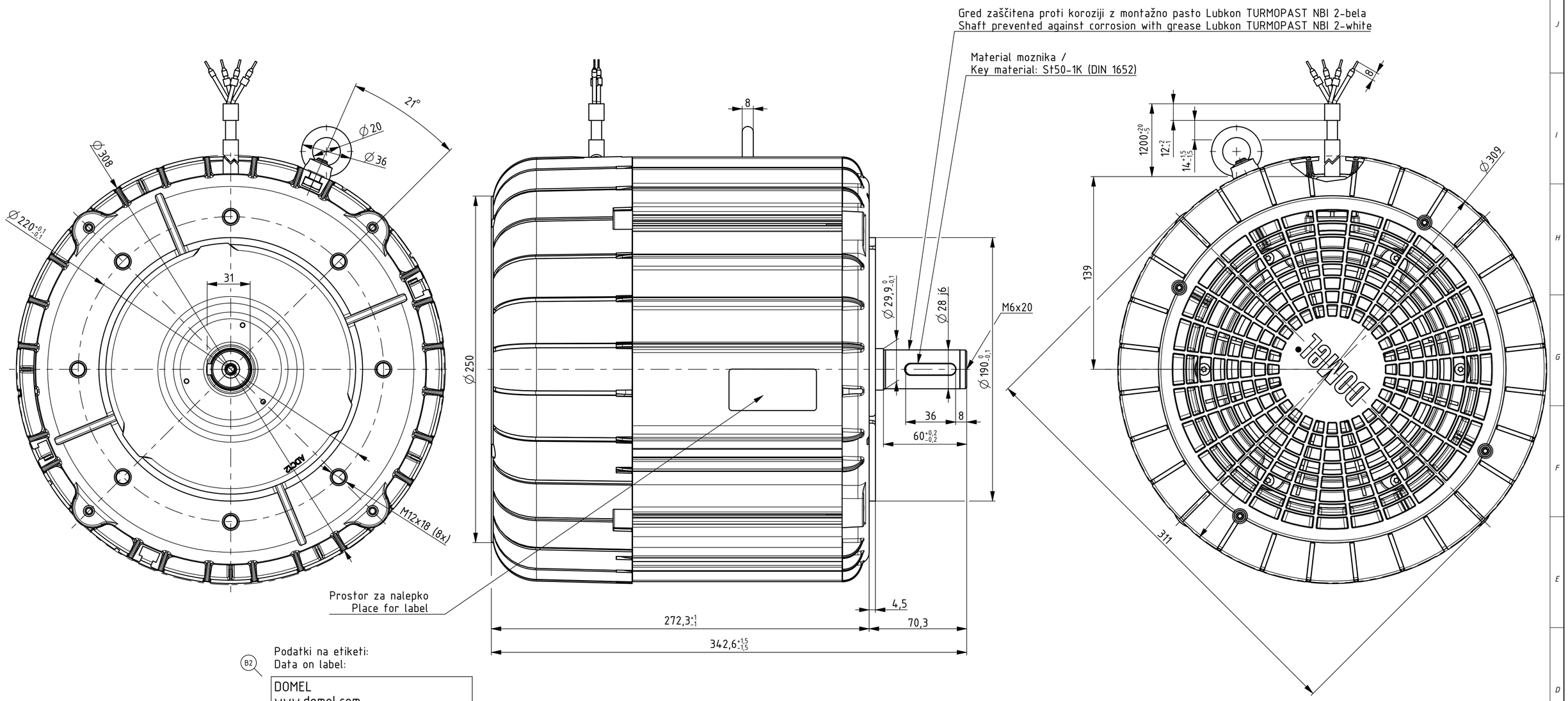

Podatki na etiketi:
Data on label:

B2

DOMEL
www.domel.com
Made in Slovenia (EU)
Type: AZ 220-100-P120B-ACVI
Code: 749.3.698-5
Cust ID: 927200-0
Ui: 3x 400-480 VAC
10p S1 IP55
S/N: XXXXX Date: XXXXX
n_n: 1730 rpm
T_n: 40 Nm
P_{max}: 7900 W
n_{max}: 2600 rpm
T_{max}: 34 Nm
I_{max}: 16 A
BEMF: 183 V
Rs: 0.15 Ω
Ld: 5.8 mH
216.7 Hz
41.4 kg
Class 180 (H) D-180-1
Tamb = 40 °C
CE 3500
c UL us

Notes: max. torque is reachable up to 2200 rpm.

B1

LEŽAJI / BEARINGS	6206 C3 HYBRID
MAKSIMALNA MOČ / MAXIMAL POWER	7900 W
NAZIVNA HITROST / NOMINAL SPEED	1730 /min
NAZIVNI NAVOR / NOMINALTORQUE	40 Nm
MAKSIMALNI TOK / MAXIMAL CURRENT	16,0 A
IP RAZRED / IP CLASSIFICATION	IP 55
MASA / MASS	41,4 kg
TIP ELEKTRONIKE / EC CONTROLLER TYPE	

Opombe / Remarks:
1. Moment privitja vijakov M12 pri montaži motorja je max. 30 Nm.
Max. torque for bolts M12 fastening at motor assembling is max. 30 Nm.

mera	odstopek	Ozn. Mark	St. obvestila Nr. of notice	Datum Date	Ime Name
⌀28 j6	+0,009	B2	15328	12.04.21	D.Jaušovec
	-0,004	A0	15238	01.03.21	D.Jaušovec

Tolerance odprtih mer / Tolerances without individual indications: ISO 8015, ISO 2768 - mK
Površinska hrapavost / Surface finishing

	Datum/Date	Ime/Name
Izdelal / Designed	22.02.21	D.Jaušovec
Pregl. / Verified	12.04.21	B.Benedik

DOMEL®
Otoki 21, 4228 Železniki, Slovenija

Merilo / Scale: 1:2
Original format: ISO 5457 - A2
Gradivo / Material

Naziv / Title: MOTOR AZ 220-100-P120B-ACVI

Koda / Code: 749.3.698-5
List / Sheet: 3+
Stran / Page: 1

7493698005_MOTOR_AZ_100

Izdelano s CAD/ProEngineer - ročno spreminjanje ni dovoljeno! Vsak prenos tretjim osebam ali uporaba v nedogovorjene namene ni dovoljena po zakonu o avtorskih pravicah.
Made with CAD/ProEngineer - changing is not allowed! Any unauthorized copying of this drawing or unauthorized distribution of the information contained herein is prohibited.