ROCK GROUTING AND SPRAYING

ICTUS

CM 5001/2 Mixer Unit with
402/406 Spray Gun
MKIII, M500 or M60 Pump



INTRODUCTION

Ictus has been at the forefront of the mining and construction industries since the early 80's with our range of grouting equipment. Our entire mining and construction range is manufactured locally, taking great care with quality and cost. Our products are used all over South Africa and abroad in more than 15 countries and counting... Our name speaks for itself... "Performance Proven".

Our aim is to provide you with total quality and to make your bash at hand seem effortless and proficient. Our continuous commitment to innovation ensures that we are always a step ahead and that you, the customer, can always be supplied with the latest and very best products available. This is the very commitment that has also ensured our substantial growth.

INDEX

M500 Series Injection Pump	1
The CM 5001/2 Mixer	2
CM 5001 Technical Specifications	3
Grout Pump Assembly	4
Gearbox Assembly	5
Vane Motor Assembly	6
75L Drum Assembly - CM5001/2	7
90L Drum Assembly - CM5001/2	8
ICTUS Maintenance Manual	9-12

E&OE • Product colors may vary due to production runs & customer requirments

ICTUS

TECHNICAL SPECIFICATIONS

M500 SERIES INJECTION PUMP

The ICTUS M500 Series Pump is reciprocating air-motor connected directly to a pump piston with a check valve.
The graphs below give some indication of the capability of the M500 Series. However, the figure will vary depending on aspects such as the air pressure, volume and fluctuation. Actual results will depend on the type of mix, the state of the delivery hose, and the condition of the the pump itself.

Achievable Results:
Using a 0.33 water: cement ratio (thick mix) vertical holes 20 metres (66ft).
And more with full hole grouting.

Depending on the underground conditions, 10 to 30 holes can be completed per shift with 1.8 to 2.5 m (6 ft to 8 ft) long holes up to 200 holes per shift can be completed.
For spraying rock sealing or ground consolidation materials an average of 80 to 110 m (265 sqft) per 6 hour shift can be achieved with double that for thin materials.

Using the extension arms areas 4.5 m (15 ft) from the ground can be sprayed.

Thicknesses can be controlled from 1 mm for thin materials to 10 mm (⅜ in) in a single pass. The materials which can be handled range from pure cements to fibrous mixes and sands up to 1.5 mm (1/16 in) without additives and minus 4 mm (3/16 in) with placticisers.

Coarser mixes such as minus 6 mm (¼ in) crusher can require the use of the MK 60 Pump and the inclusion of fly-ash in the mix.

DIMENSIONS:

Weight: Pump excluding hose..... 17 kg
Pump with hoses..... 29 kg
Packing Dimensions:....460mm x 400 mm x 1090 mm

PUMP CABABILITIES

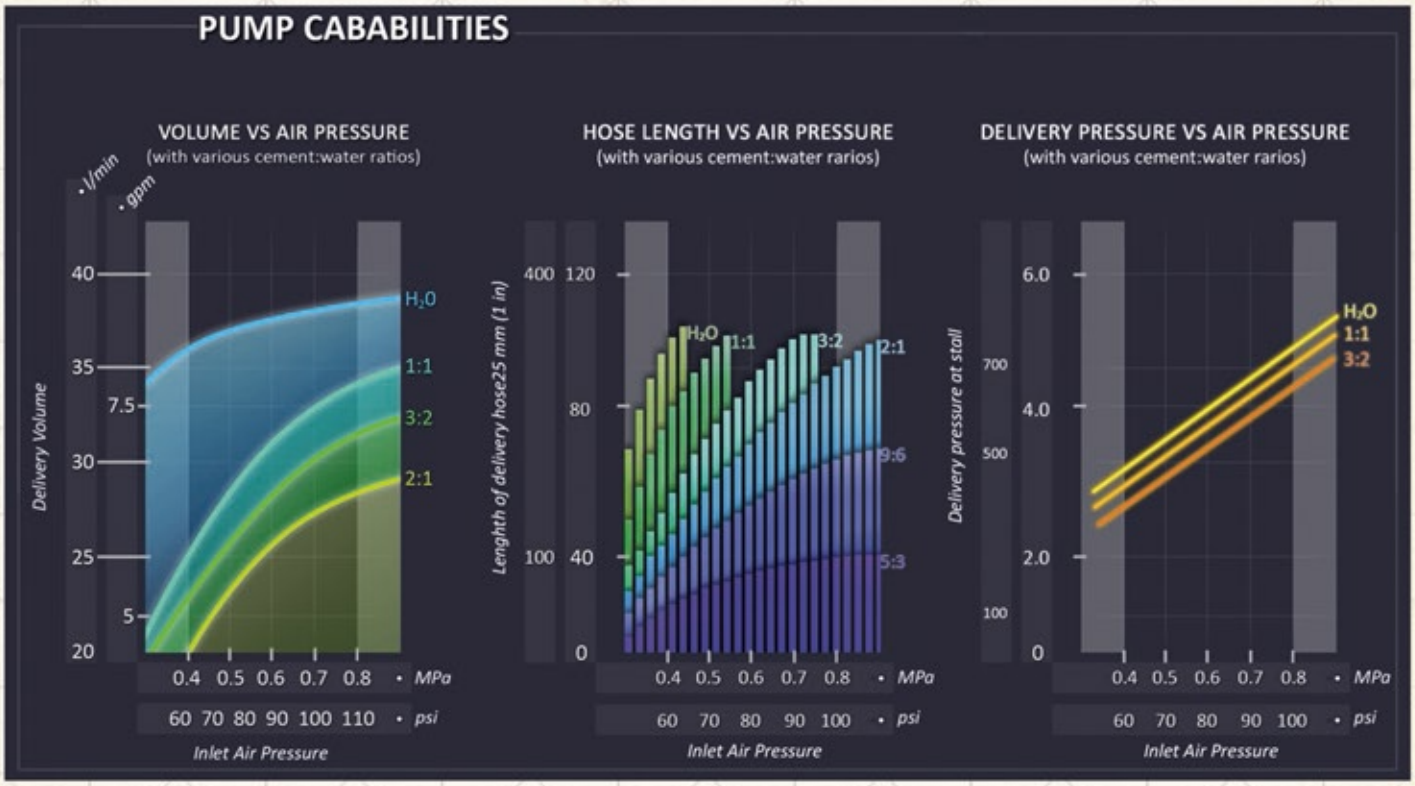

THE CM 5001/2 MIXER

The ICTUS CM 5001/2 mixer is designed to work with the ICTUS M 500 Pump. It prepares a mix suitable for pumping as a grout or a sprayable material.

Main Features:

- Only three main parts.
- The power unit, the mixing blades and the buckets.
- Slow speed, no spill action:
  The principle on which the ICTUS mixer works is to keep the bottom and a side clear of material and break-up and lumps to deliver a smooth, even mix.
- Ease of maintenance:
  The power unit can be taken away seperately.
- Simple operation:
  The power unit is locked onto the blade assembly by twisted action. The blades are keptin axial rotation by the peg located in the bucket. Should the motor stall, it is a simple matter to reduce the load on the unit by lifting up the whole power unit/ blade assembly.
- Air agitators can be fitted where the material mixed tends to segregate before pumping.

While inteded for intermittent operation as in grouting, it has found use in continuous mix operations.

THE ICTUS SPRAY GUN

The ICTUS Spray Gun Type M402/406 was developed to meet the need for a simple unit which would apply viscous materials in a manner similar to plastering. The Spray Gun is an air-assisted applicator, which can perform to give a heavy or fine finish.

Main Features:

- Light weight - it weighs just over a kilogram, sufficient to ensure rugged construction yet it is light enough to enable the operator to perform a whole shift comfortably.
- Adjustable spray, from jet (for filling cavaties) to fine spray by adjusting the air feed and the front nozzle screw action.
- Hardened inner jet and outer nozzle to ensure long and reliable service.
- Through-flow design to eliminate blockages with viscous mixes.
- Balanced for comfortable handling.

M402 M406



THE M 500 PUMP

The ICTUS M500 Series Pump has been designed and developed for injection and spraying. As an air operated unit it can be stalled without damage and is completely safe for use. Most liquid and viscous material can be handled. It is primarily intended for cementitious and water based binders where low volume, but relatively high pressure is required.

The chief attraction of the M500 is its portability.
Yet it is rugged enough to withstand normal mine handling. It produces high pressure for spraying. This pump is ideal for those requirements where time is of the essence. It is very easy to mantain.

PRINCIPAL APPLICATIONS

Mines:

- Roofbolting and ground anchors: full-grouted bolts and anchors which are installed by pregrouting or postinjection.
- Longhole grouting: holes from 3 m up to 20 m and longer can be injected with cementitious mixes
- Fire-protection of timber supports - by cavity-filling and/or overspraying with cementitious mixes.
- Ventilation control.
- Rock sealing.
- Injection of grout-set props, with a modification to produce high pressure setting.
- Grouting instruments into boreholes.

Civil Engineering & Construction:

In addition to most of the applications used in Mines the system is suitable for:

- Cavity injection - particularly in situations where ground is sensitive, this will ensure a high degree of operator control.
- Very low water/cement ratio mixes.
- Embankment and ground consolidation: thin shell guniting using a spray of gypsum/seed or fibre-glass reinforced cementitious mixes.

Chemical & Technical Industry:

- Pumping any liquid or viscous material, especially in hazardous atmospheres.
- Fibre-glass/cement spray machines for producing reinforced panels.

FEATURES OF PUMP

- Easily hand-portable: because it is light (17 kg or 29 kg complete with hoses)
- Rugged construction to withstand tough handling in mines and on construction sites.
- Bottom feed - no hopper required, no transferring of material, no air-entainment.
- One-vale operation for complete and precise control, remote control can be used.
- Screwed main parts: the fluid section can be dismantled quickly in case blockage.
- Air-operated motor, with all the working parts sited internally. The exhaust keeps the top seal clear of any leaking material, so considerably extending the operating life of the pump.
- Major parts are stainless steel or rust-proofed.
- For cleaning: just through with water.

TECHNICAL SPECIFICATIONS

CM 5001/2 MIXER

The ICTUS Grout Mixer (described on page 2) consisits of three parts:

- The Power Unit.
- The Blades.
- The Mixing Buckets.

The Power Unit is constructed from a 7.5 kW (10 hp) rotary vane air motor and a 14:1 torque multiplying gearbox.

The graphs below give an indication of the performance of the unit.

DIMENSIONS:		CM5001	CM5002
Bucket Capacity		75 *litres*	90 *litres*
Speed of Rotation		60-300 rpm	60 - 300 rpm
Speed of Mixing (approx.)		2 mins	2 mins
Weight:	Air motor + Gearbox	17.9 kg	17.9 kg
	Bucket	16.95 kg	32.3 kg
	Paddle	8.3 kg	12.8 kg
Packing Dimensions:		460 x 460 x 680 (mm)	660 x 700 x 740 (mm)
Air Motor + Gearbox		310 x 450 x 480 (mm)	

PERFORMANCE OF MIXER BLADES WITH THEIR SPEEDS

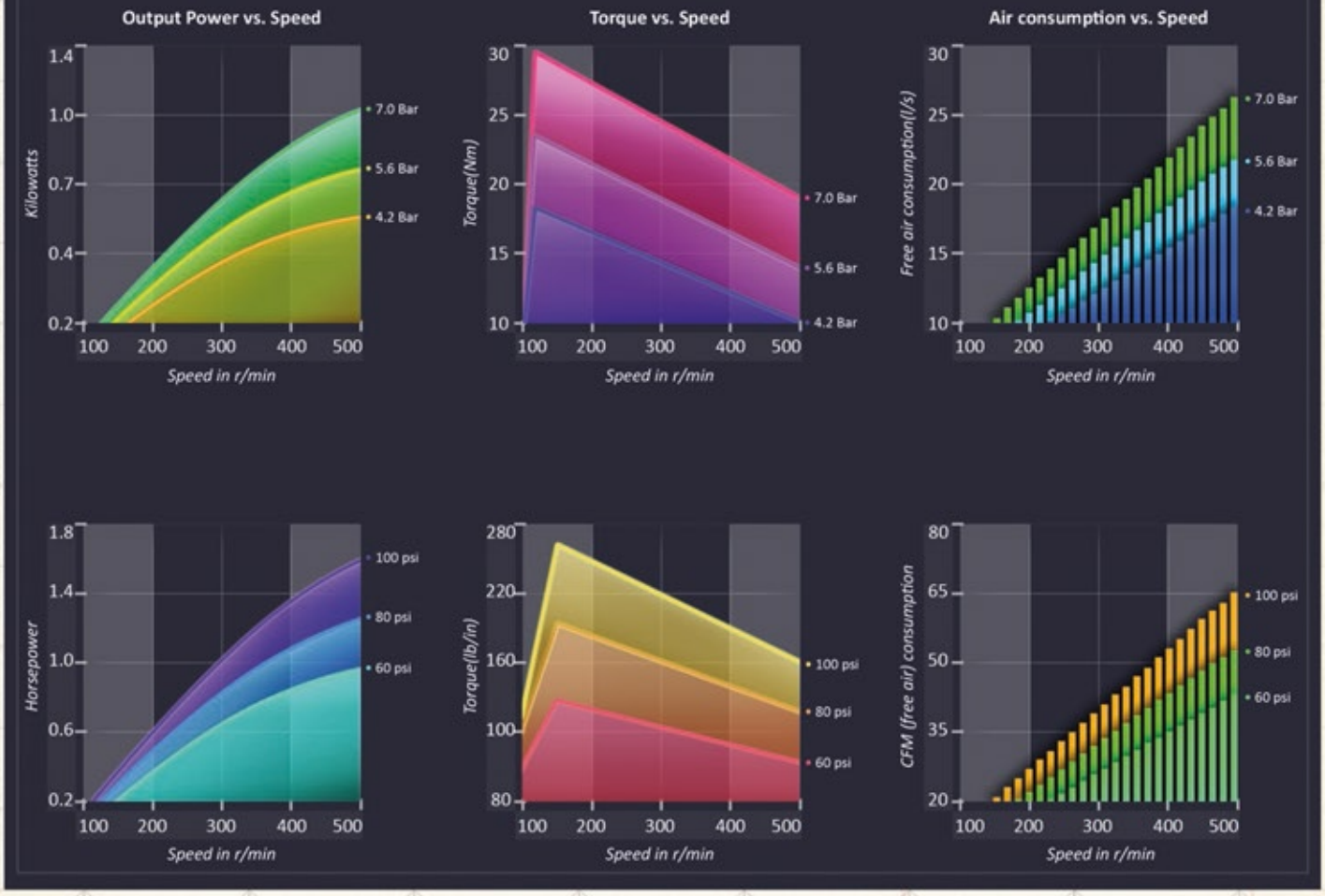

In the interests of continuing development Ictus Equipment reserves the right to make changes, without prior notice, to specifications, designs or performance of equipment in this leaflet.

Ictus Equipment (Pty) Ltd is represented in: Australia, Austria, Bolivia, Botswana, Cananda, Chile, China, DRC, Finland, Germany, India, Italy, Namibia, Norway, Peru, the Philippines, Poland, Russia, Ictus Singapore Pte, South Africa, Spain, Sweden, Swaziland, Switzerland, UK, USA, Zambia, Zimbabwe.

40 Colin Wade Street, Delville Ext.6, Germiston.
PO Box 14404, Wadeville 1422.
Telephone: +2711 824-2941/6
Fax: +2711 824-3155

ICTUS

ICTUS EQUIPMENT (PTY) LTD
M500 GROUT PUMP ASSEMBLY

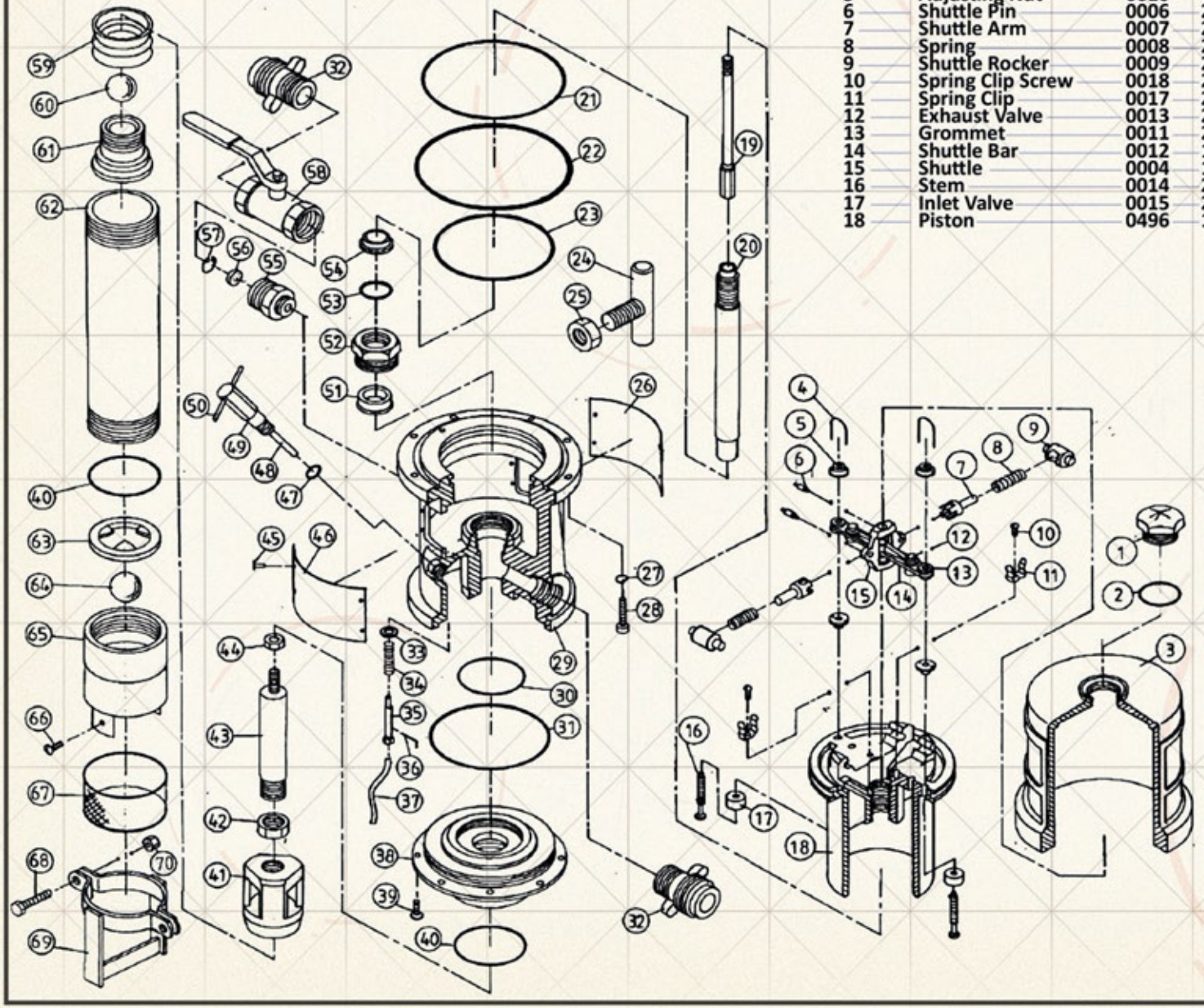

ITEM NO.	DESCRIPTION	PART NO.	QTY
1	Cap Nut	0492	1
2	'O' Ring	1700	1
3	Cylinder	0493	1
4	Lockwire	0005	2
5	Adjusting Nut	0010	4
6	Shuttle Pin	0006	2
7	Shuttle Arm	0007	2
8	Spring	0008	2
9	Shuttle Rocker	0009	2
10	Spring Clip Screw	0018	2
11	Spring Clip	0017	2
12	Exhaust Valve	0013	2
13	Grommet	0011	2
14	Shuttle Bar	0012	1
15	Shuttle	0004	1
16	Stem	0014	2
17	Inlet Valve	0015	2
18	Piston	0496	1
19	Trip Rod	0494	1
20	Displacement Rod	0021	1
21	Piston 'O' Ring	0495	1
22	Cylinder 'O' Ring	0026	1
23	Body 'O' Ring	0831	1
24	Handle	1317	1
25	Handle Nut	0221	1
26	Name Plate	1401	1
27	Spring Washer	0029	7
28	Allen Cap Screw	0833	7
29	Body	1316	1
30	'O' Ring	1312	1
31	'O' Ring	1308	1
32	Nylon Adaptor	1362	2
33	Washer Seal	1304	1
34	Spring	1305	1
35	Wick Stem	1303	1
36	Wire	1306	1
37	Wick	1307	1
38	Flange	1512	1
39	Countersunk Screw	1310	8
40	'O' Ring	0213	2
41	Cage	0208	1
42	Nut	1331	1
43	Conrod	0207	1
44	Conrod Nut	0206	1
45	Rivet	1396	8
46	Instruction Plate	1313	1
47	'O' Ring	1322	1
48	Sellock Pin	1492	1
49	Dipstick	1319	1
50	Sellock Pin	1493	1
51	Special U Seal	0025	1
52	Throat Nut	0023	1
53	Throat Nut 'O' Ring	0024	1
54	Wiper Seal	0022	1
55	Lube Inlet Adaptor	0517	1
56	Filter	1301	1
57	Circlip	1300	1
58	Ball Valve	0473	1
59	Double Lip Seal	0210	1
60	Piston Ball	0209	1
61	Bell Mouth	0211	1
62	Riser Tube	0212	1
63	Ball Stop	0214	1
64	Inlet Ball	0505	1
65	Foot Valve	0216	1
66	Screw	0056	1
67	Sieve	0223	1
68	Hex Bolt	1762	1
69	Foot Valve Bracket	0330	1
70	Nut	0108	1
71	Bush	1494	1
X	Air Motor Repair Kit	0057	
Y	Fluid Sect Repair Kit	0058	
Z	Body Sub Assembly	1309	

COPYRIGHTS RESERVED

ICTUS EQUIPMENT (PTY) LTD
GEARBOX ASSEMBLY

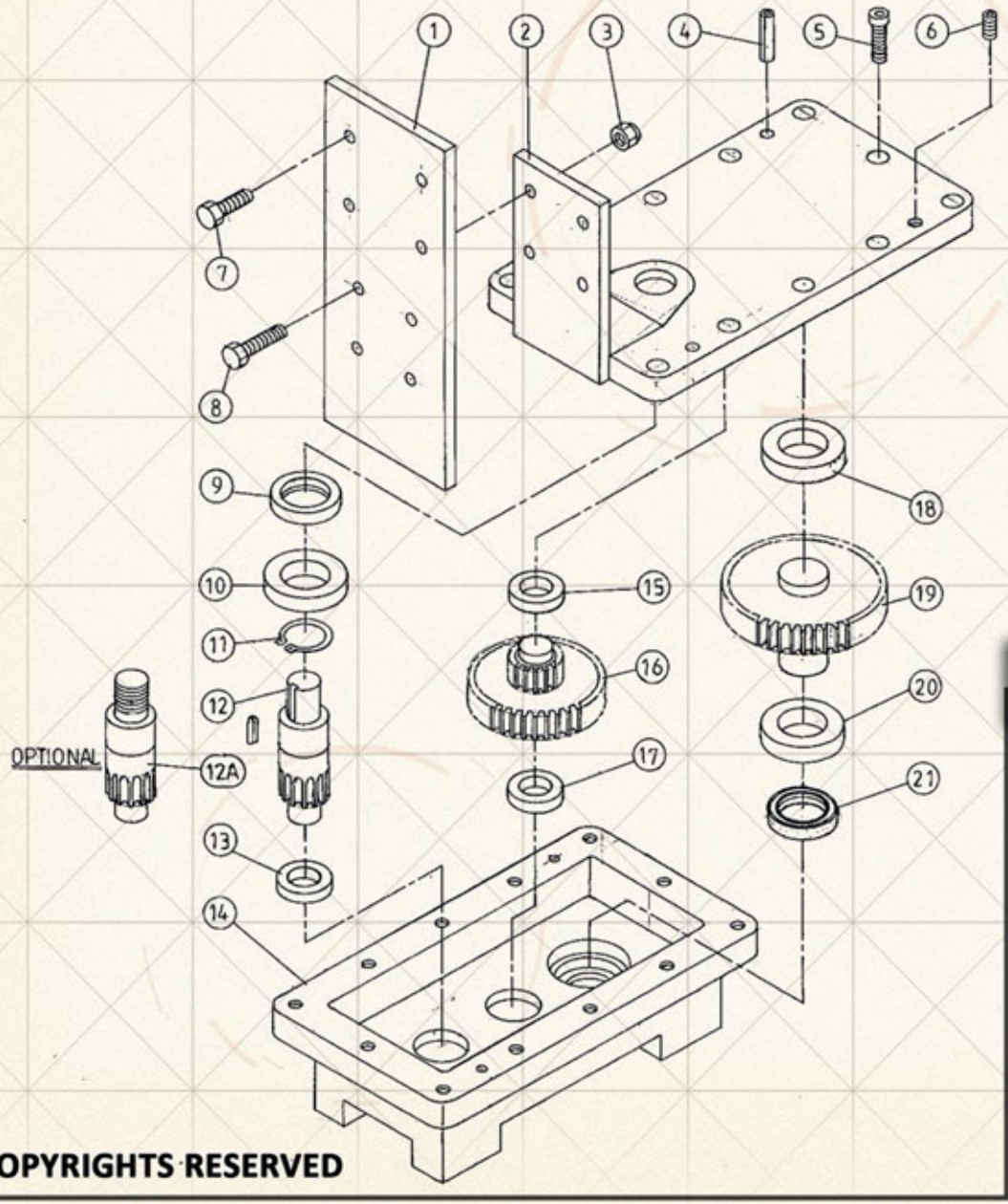

ITEM NO.	DESCRIPTION	PART NO.	QTY
1	Support Plate	0870	1
2	Lid	0331	1
3	Nylock Nut	1443	4
4	Dowel Pin	0334	2
5	Allen Cap Screw	0338	11
6	Grub Screw	1461	2
7	Hex Screw	0105	4
8	Hex Screw	0246	4
9	U-Seal	0339	1
10	Bearing	0341	1
11	Circlip	0336	1
12	Small Gear	0337	1
12A	Threaded Small Gear	0469	1
13	Bearing	0340	1
14	Gearbox Body	0335	1
15	Bearing	0340	1
16	Double Gear	0330	1
17	Bearing	0340	1
18	Bearing	0341	1
19	Large Gear	0342	1
20	Bearing	0343	1
21	U-Seal	0332	1

OILER ASSEMBLY

1	Inlet Adaptor	0157	1
2	Lid	0480	1
3	Seal	0481	1
4	Wick	0478	1
5	Lock Wire	0482	1
6	Center Stud	0302	1
7	Body	0486	1
8	Barrel Nipple	0776	1

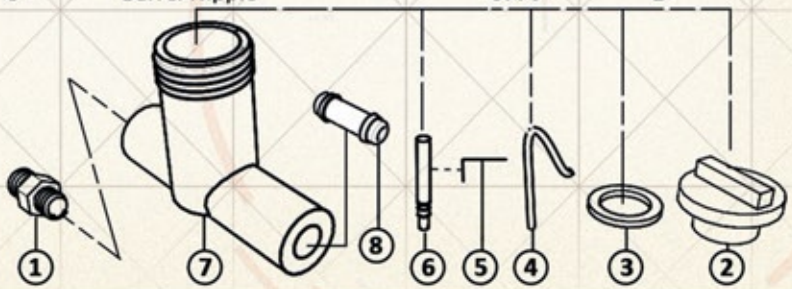

COPYRIGHTS RESERVED

ICTUS EQUIPMENT (PTY) LTD
VANE MOTOR ASSEMBLY

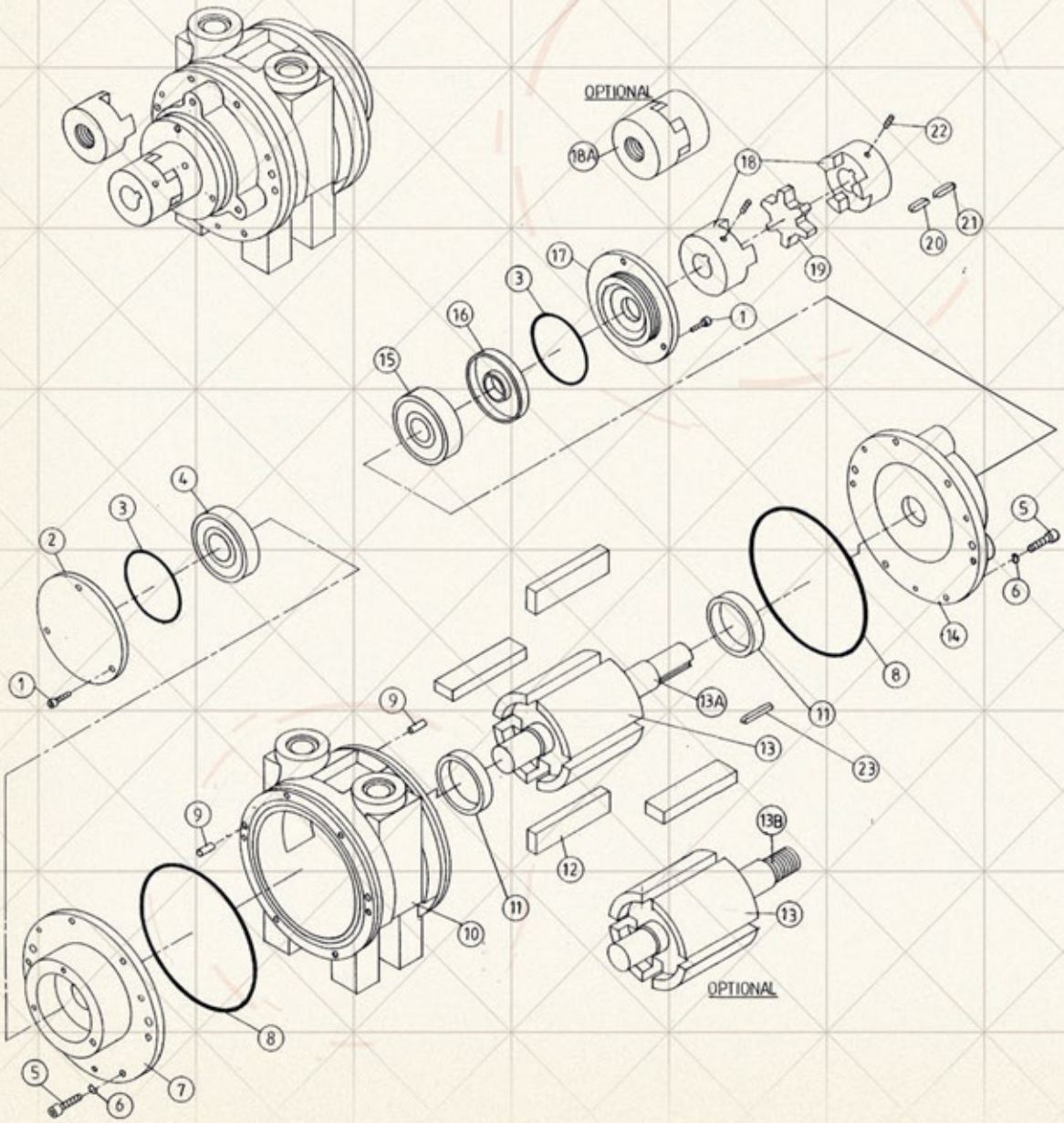

ITEM NO.	DESCRIPTION	PART NO.	QTY
1	Cap Screws	0868	6
2	Bearing Top Lid	0856	1
3	'O'Ring	0804	2
4	Bearing	0857	1
5	Allen Cap Screw	0228	12
6	Spring Washer	0029	12
7	Upper Bearing Housing	0853	1
8	'O' Ring	1580	2
9	Dowel	0860	4
10	Vane Motor Body	0851	1
11	Ejection Ring	0863	2
12	Vane Blades	0865	4
13	Rotor	0852	1
13A	Drive Shaft	0858	1
13B	Threaded Drive Shaft	0896	1
14	Bearing Housing	0854	1
15	Bearing	0869	1
16	U - Seal	0866	1
17	Bottom Bearing Lid	0855	1
18	Couplers	0857	2
18A	Threaded Couplers	0897	2
19	Spacer	0859	1
20	Key Steel	0864	1
21	Key Steel	0862	1
22	Grub Screws	1461	2
23	Key Steel	0861	1

COPYRIGHTS RESERVED

ICTUS EQUIPMENT (PTY) LTD
75L DRUM ASSEMBLY - CM5001

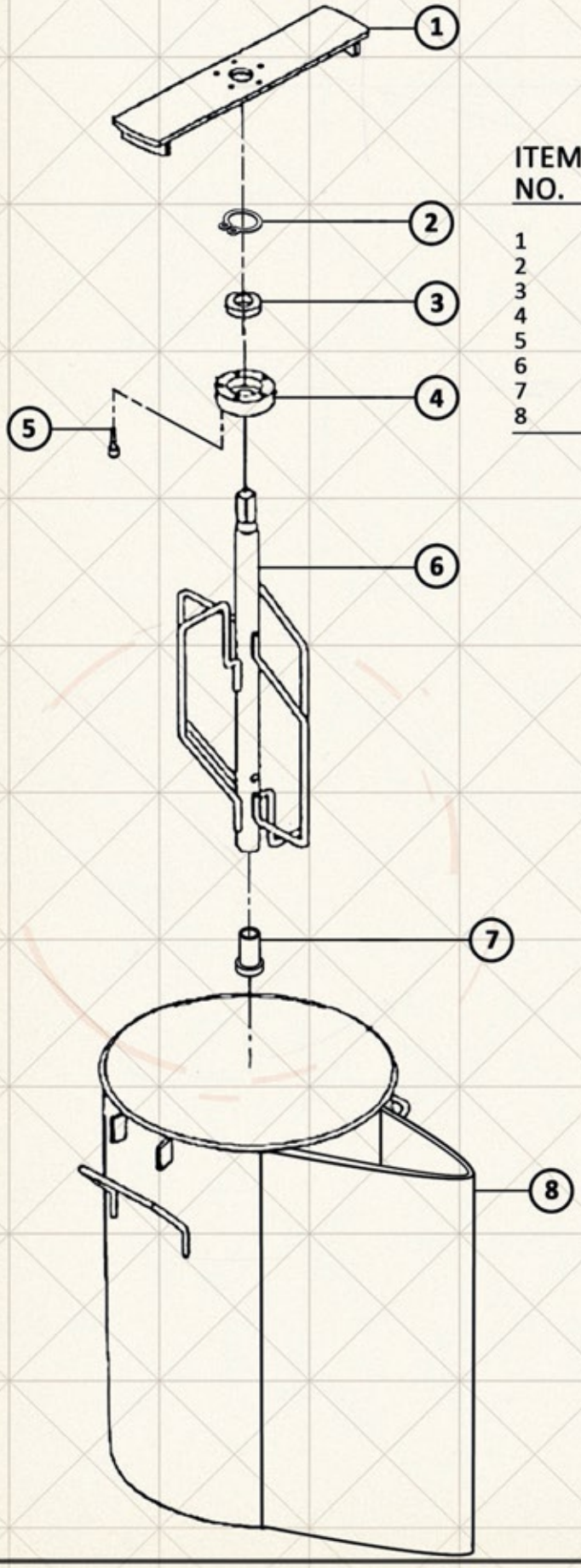

ITEM NO.	DESCRIPTION	PART NO.	QTY
1	Gearbox Location Plate	1482	1
2	Circlip	1131	1
3	Location Plate Bearing	1463	1
4	Bearing Housing	1466	1
5	Allen Cap Screw	1465	5
6	Paddle	1483	1
7	Nylon Bush	1129	1
8	75L Drum Only	1484	1

COPYRIGHTS RESERVED

ICTUS EQUIPMENT (PTY) LTD
90L DRUM ASSEMBLY - CM5002

ITEM NO.	DESCRIPTION	PART NO.	QTY
1A	Allen Bolt Screw	1458	4
1B	Allen Bolt Screw	1459	2
1C	Allen Bolt Screw	1460	2

ITEM NO.	DESCRIPTION	PART NO.	QTY
2	Alluminium Block	1134	1
3	Gearbox Location Plate	1482	1
4	Nylon Block	1130	2
5	Sieve	1135	1
6	Nylock Nut	1443	8
7	Circlip	1131	1
8	Location Plate Bearing	1463	1
9	Bearing Housing	1466	1
10	Allen Cap Screw	1465	5
11	Paddle	1483	1
12	Nylon Bush	1129	1
13	Drum Only	1484	1

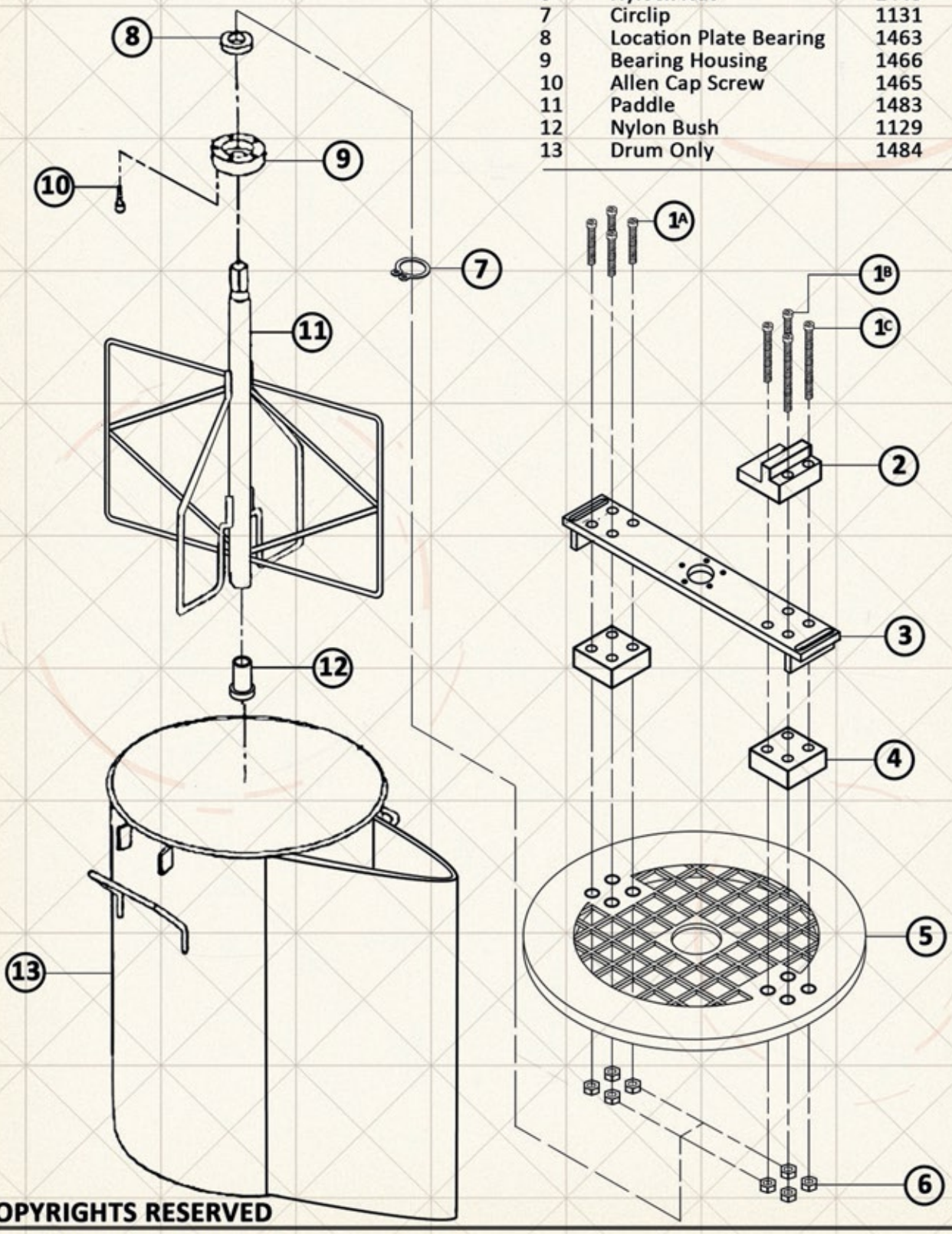

COPYRIGHTS RESERVED

FOR MODELS: M30/M50/M60/M500 AND BUILT IN LUBRICATOR UNITS

1. OPERATING INSTRUCTION

A. PREPARATION OF GROUT PUMP

- ENSURE THAT THE LUBRICATOR, OILER OR BUILT IN LUBRICATOR HAS BEEN FILLED WITH OIL.
- DO NOT EXCEED MORE THAN 8 BAR INPUT PRESSURE.
- ENSURE THAT BOTH COVER PLATES ARE SECURELY IN PLACE.

B. OPERATION OF UNITS

1. Connect delivery to this outlet.
2. Connect the air supply to the filter lubricator, on to the pump.
3. Place the pump into the mixing or decanting unit (container).
4. In order to allow the pump to work slowly, open the air valve.
5. Mix the material to be pumped. Ensure that lumps are non-existent and that the corners of the drum/container are free from material build-up.
6. Place the pump into the mixture, open the air valve slowly to allow the mixture to flow through the hose.
7. At NO TIME should the pump be left in the mixture for a period longer than 5 to 10 minutes (depending on the material), without circulating the material.
8. Once the pumping or spraying has been completed, the material must be flushed from the pump - with clean water. Place the pump into a drum of water and pump the fluid until it runs cleanly through the pump.
9. If neccessary, wash the outside of the pump with the discharge hose.
10. Close air supply and disconnect hose.
11. Turn pump upside down, to allow all excess water to drain from hoses. However where no hoses have been used, the water will drain directly from the body outlet.

C. PUMP AND HOSE BLOCKAGE

1. Should the pump stop operating, and the material ceases to move through the hose, close the air supply and disconnect the air hose. This will allow the unit to depressurize.
2. Unscrew the hose connections from the pump.
3. Re-connect the air supply and allow the pump to operate slowly, should it still fail to operate, disconnect the air supply.
4. Unscrew the foot valve and clean the ball.
5. Unscrew the riser tube from the head. Seperate the riser tube from the riser shaft.
6. Flush the riser tube with water, and wash the base inlet until the water runs cleanly through.
7. Clean the piston section on the con rod, and insert back into the riser tube. Screw the riser tube back on to the pump head.
8. Screw the foot valve back on to the riser tube and re-connect the air supply.
9. Open air valve and allow the pump to operate.
10. Connect the discharge hose. If the discharge hose is blocked, knock hose with heavy object to allow the material to flow.

- ALWAYS ENSURE THAT THE MATERIAL IS MIXED CORRECTLY AND THAT ALL LUMPS/SOLIDS HAVE BEEN DISPERSED.
- ALWAYS MAKE SURE THAT THE PUMP AND THE HOSES ARE FLUSHED OUT AFTER DAILY USE.

D. AIR MOTOR REPAIRS

1. Unscrew the fluid section housing and remove from the body.
2. Pull out the con rod completely. If it is tight, open air slowly until the con rod is on the "down stroke" and disconnect air supply.
3. Unscrew the cap nut and pull out.
4. With the use of emery paper, hold the trip rod with a vice grip and unscrew the cap nut.
5. Remove cap screws from the body.
6. Slide the the cylinder off over the piston. Do not tilt the cylinder - keep is straight until it has been removed completely from the piston.
7. Remove the piston with the displacement rod from the body.
8. Check the condition of the piston and cylinder surface. The surface must be smooth and lubricated (free from "bad" marks, wear and tear.)
9. Unscrew the displacement rod from the piston, using a plug socket spanner. **DO NOT** grip onto the working surface.
10. Place piston on workbench.

E. DISASSEMBLY OF THE PISTON

1. Make sure that the valves are on the "down" stroke, and that the toggles are also in the down position.
2. Remove the 2 lock wires. (One on each valve stem.)
3. Unscrew the adjusting nuts from the piston.
4. Remove the valve stems from the piston.
5. Remove the inlet seals from the stems and check for cracks and general wear and tear.
6. Using a 12 mm flat spanner, remove the toggle rockers, by pushing them in towards the center. By doing so, the spring, toggle arms and the shuttle bar will be freed from the piston.
7. Check the spring clips for breakage, and make sure that the ends are not too far apart from one another. If so, Push the ends towards one another to close grip. If broken - replace.
8. Inspect the exhaust valve for cracks, wear and tear.
9. Inspect the shuttle for breakage as well as the trip rod for straightness, wear and tear.

F. ASSEMBLY OF THE PISTON

1. Always ensure that the spring clips are tightened and straight.
2. Put the valve stems through the piston, ensuring that the inlet valves are fitted to the bottom of the valve stems. Place lock nuts and tighten down. Place exhaust valves in hot water to soften, to enable easy assembly into the cros bar.
3. Take cross bar, slip through shuttle and replace the trip rod through the middle of the shuttle and replace the trip rod through the middle of the shuttle and the cross bar. Screw on cap nut.
4. Place complete cross bar assembly over valve stems. Ensure that the bar is secured into spring clips.
5. Screw the two adjusting nuts over the cross bar, onto the valve stems.

6. Slide shuttle pins into two holes on shuttle. Slide the shuttle arm over the spring. Make use of a flat spanner to insert rocker into piston grooves.
7. Press cap nut down, until rockers click over and the exhaust valves are pressed against the piston face.
8. Tighten adjusting nuts from the top, firmly against the grommets on the crossbar, ensuring that the top and bottom adjusting nut holes are in line with one another.
9. Set bottom gap (between the inlet valves and the piston) to +/- 2.4 mm. Use flat gauge to check the dip. To set gap, screw adjusting nut from top until you have a slide fit.
10. Once set, place lock wire through adjusting nuts to secure.
11. Pull the trip rod and cap nut up and down a few times.
12. Re-check the cap between the inlet valves and the piston.
13. Screw the displacement rod onto the bottom of the piston.
14. Smear the 'O' ring and toggle assembly with grease.
15. Push piston into the base assembly.

G. ASSEMBLY OF THE AIR MOTOR

1. Smear grease on to the inside of the cylinder and slide the cylinder over the piston. Line up the holes.
2. Replace cap screws complete with spring washers.
3. Replace the cap nut (first screw onto the trip rod). Make sure it is tight then tighten the top cap nut.
4. Test air motor with air supply - do not open fully.



NB - KEEP HANDS FREE FROM ALL MOVING PARTS!!

H. ASSEMBLY OF THE FLUID SECTION

1. Assemble the adaptor onto the base together with the 'O' ring and seal.
2. Connect the riser shaft, displacement rod and lock nut.
3. Screw the piston section (i.e. cage into bell mouth with ball and seal fitted).
4. Smear grease on to the tube threads and tighten.

I. TESTING OF THE PUMP

NOTE:

- DO NOT OPERATE THE PUMP WITHOUT THE NAME PLATES FIRMLY IN PLACE.
- DO NOT PLACE FINGERS INSIDE THE PISTON AREA WHILST THE AIRLINE IS CONNECTED TO THE PUMP.

1. Connect the airline to the pump. Open air valve slowly to allow the motor to run freely.
2. Place pump into a container of water and open air supply. Allow the water to pump through discharge outlet.
3. Run pump faster and then slowly close off discharge valve until the pump stalls.
4. The pump will be under pressure, check that the pump does not trip over. If so, leaks may be found in the following places:

    - Throat nut
    - Foot valve
    - Discharge valve
    - Riser tube (near base)

5. If leaks are present at the above places the cause thereof may be:

    - Throat nut - the throat nut may not be tight enough.
    - Foot valve - the foot valve ball may not be seated correctly or the foot valve has not been tightened onto the tube correctly.
    - Discharge valve - see that there is not lead at the threads.
    - Riser tube (near base) - check the 'O' rings and seals for damage, or the riser tube may only need to be tightened.

J. USING A PRESSURE GAUGE WITH THE DISCHARGE VALVE

1. Open air and allow the pump to discharge through the valve.
2. Slowly close the valve until fully closed - this will cause the pump to be under pressure.
3. Crack valve and close for the pump to develop maximum pressure.
4. Whilst the pump is under pressure check for any leaks.
5. If the pump does not stall, check seating of the ball on the foot valve.

- TO DISCONNECT AIR, CLOSE AIR SUPPLY FIRST, OPEN DISCHARGE VALVE TO DE-PRESSURIZE THE PUMP AND REMOVE AIR SUPPLY.

SHOULD ANY OTHER PROBLEMS BE ENCOUNTERED, WHICH CANNOT BE RESOLVED, PLEASE FORWARD THE NECCESSARY INFORMATION BY FAX OR E-MAIL TO:

E-MAIL: sales@ictus.co.za or FAX: +2711 824 3155

NOTES

ICTUS EQUIPMENT



ICTUS

40 Colin Wade Street, Delville Ext.6, Germiston.
PO Box 14404, Wadeville 1422.
Telephone: (011) 824-2941/6
Fax: (011) 824-3155