Bladder Accumulators
BA Series

Bottom & Top Repairable

Parker

ENGINEERING YOUR SUCCESS.

Table of Contents

Page No.

Overview....3
Features....5
Specifications....6
Model, Capacities and Dimensions....8
Available Options....11
Parts and Accessories....12
How To Order....13
Offer of Sale....14

In line with our policy of continuing product improvement, specifications and information contained in this catalog are subject to change.

Copyright ©2025 by Parker Hannifin Corporation. All rights reserved.

PRINTED IN THE U.S.A.

WARNING

FAILURE OR IMPROPER SELECTION OR IMPROPER USE OF THE PRODUCTS AND/OR SYSTEMS DESCRIBED HEREIN OR RELATED ITEMS CAN CAUSE DEATH, PERSONAL INJURY AND PROPERTY DAMAGE.

This document and other information from the Parker Hannifin Corporation, its subsidiaries and authorized distributors provide product and/or system options for further investigation by users having expertise. It is important that you analyze all aspects of your application, including consequences of any failure and review the information concerning the product or system in the current product catalog. Due to the variety of operating conditions and applications for these products or systems, the user, through its own analysis and testing, is solely responsible for making the final selection of the products and systems and assuring that all performance, safety and warning requirements of the application are met.

The products described herein, including without limitation, product features, specifications, designs, availability and pricing, are subject to change by Parker Hannifin Corporation and its subsidiaries at any time without notice.

Offer of Sale

The items described in this document are hereby offered for sale by Parker Hannifin Corporation, its subsidiaries or its authorized distributors. This offer and its acceptance are governed by provisions stated on a separate page of the document entitled 'Offer of Sale'.

⚠ PROP 65 WARNING **WARNING:** This product can expose you to chemicals including Lead and Lead Compounds which are known to the State of California to cause cancer and birth defects or other reproductive harm. For more information go to www.P65Warnings.ca.gov

Machesney Park, Illinois
10711 N. Second Street, Machesney Park, IL 61115

Santa Fe Springs, California
14087 Borate Street, Santa Fe Springs, CA 90670

If you have questions about the information contained herein, please contact:

Hydraulic Actuator Division
phone **815 636 4100**
parker.com/had

Why Use Bladder Accumulators?

- Improves system efficiency
- Supplements pump flow
- Supplies power in emergency
- Compensates for leakage
- Absorbs hydraulic shocks
- Highly contaminant tolerant
- Universal application
- High/low temperature tolerance
- Safety, cannot be disassembled under pressure
- Very quick response
- Works well with water, low lubricity fluids
- Wide range of compounds for a variety of fluids

GREER Bladder Products ...
The Original and still the Best!

The Parker-Greer bladder style accumulator is the industry's original, and still the best! For years this style of accumulator has served both the industrial and mobile hydraulic markets, providing a proven design for many hydraulic system applications. The Parker-Greer bladder product line offers the broadest line of quality products, including:

- 3000 & 5000/6600 PSI Bottom Repairable
- 3000/3600 & 5000/6600 PSI Top Repairable
- 3000/3600 & 5000/6600 PSI Transfer Barrier
- 3000 & 5000 PSI Gas Bottles
- A Wide Array of Options and Accessories

Parker-Greer bladder products maintain the highest quality because of our in-house bladder molding operations. The heart of the bladder accumulator is the actual bladder, and all Parker-Greer bladders are engineered and manufactured in our own facility and subjected to our own high quality inspection standards.

Certifications

Two Base Design Codes

While many countries have their own regulations and quality standards for bladder accumulators, most refer back to one of two base design codes.

1. ASME

The oldest and most referenced design code for pressure vessels is ASME. Originally written to create a standard for the manufacture of boilers on steam locomotives, the American Society of Mechanical Engineers (ASME) Boiler and Pressure Vessel Code Section VIII, Division 1 has evolved into requirements for unfired pressure vessels and accumulators in the United States. This section requires the following:

- **Certification on vessels with internal diameters of 6" or greater.**
- **Certified vessels carry the "U" symbol on them as evidence that they were designed and manufactured in accordance with the Code. The "U" symbol is an internationally recognized symbol of design and manufacturing quality.**
- **Accumulators must be manufactured from materials that meet ASME specifications for traceability.**
- **A minimum design factor of 3.5:1 in the ratio of minimum burst pressure to rated pressure. All design factors are with respect to the specified minimum tensile strength of the material.**
- **ASME requires that each vessel be marked with the design pressure at the Minimum Design Metal Temperature (MDMT) for the vessel.**
- **Surveillance of an approved quality system, like ISO 9001.**
- **All hydrostatic testing to be witnessed by a recognized authorized inspection agency**

The 3.5:1 design factor requirement is mandatory for all accumulators with ASME Certification with the exception of those that comply with a specific rule within the Code called "Appendix 22." Appendix 22 permits that accumulators manufactured with "forged" shells and with openings of a specified maximum size may be certified with a design factor of 3:1 in the ratio of burst pressure to rated pressure. This includes bladder style accumulators.

2. PED/UKCA

The Directive 2014/68/EU (Pressure Equipment Directive) came into regulation in the European Union. This Directive applies to the design, manufacture, testing and conformity assessment of pressure equipment and assemblies of pressure equipment that operate over 0.5 bar. The Directive requires the following:

- **The operating fluids must be in Group 2 (non-hazardous).**
- **Certified vessels with a volume greater than 1 liter gas capacity must be CE marked.**

		United States Design Certifications				Europe Design Certifications			Canadian & Austrialian Certifications			
											CRN & AS 1210 Design Pressure	
Style	Size	Non-ASME	ASME	Non-ASME & ASME Design Pressure	Appendix 22 Design Pressure	Stand. Engineering Practice (SEP)	CE	PED Design Pressure	CRN	AS 1210	ASME	App. 22
Bottom Repairable	10 cu. in.	Y		3000 PSI		Y		330 BAR				
	1 Pint	Y		3000 PSI		Y		330 BAR				
	1 Quart	Y		3000 PSI		Y		330 BAR				
	150 cu. in.	Y		3000 PSI			Y	330 BAR				
	1 Gallon		P	3000 PSI	4000 PSI		P	330 BAR	P	P	3000 PSI	4000 PSI
	2.5-15 Gallon		P	3000 PSI	3600 PSI		P	330 BAR	P	P	3000 PSI	3600 PSI
Top Repairable	2.5-15 Gallon		P	3000 PSI	3600 PSI		P	330 BAR	P	P	3000 PSI	3600 PSI
Bottom Repairable	1 Gallon		A	5000 PSI	6600 PSI							
	2.5-15 Gallon											
Top Repairable	2.5-15 Gallon		A	5000 PSI	6600 PSI							

Key Advantages of the BA Series:

Bladder accumulators are suitable for storing energy under pressure, absorbing hydraulic shocks, and dampening pump pulsation and flow fluctuations. Bladder accumulators provide excellent gas and fluid separation ensuring dependable performance, maximum efficiency, and long service life.

Fluid Compatibility

Greer bladder accumulators are compatible with a wide variety of fluids. The standard accumulator may be used with petroleum-based industrial or water-based flame resistant fluids. Bladders compatible with most industrial fluids can be furnished on special orders with temperature ranges from -40°F to 250° F (-40°C to 121 °C).

Precharge

Units are shipped with a nominal nitrogen precharge as standard. For specific precharge pressures, specify at the time of order.

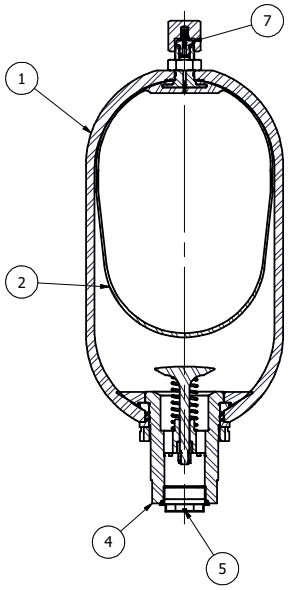

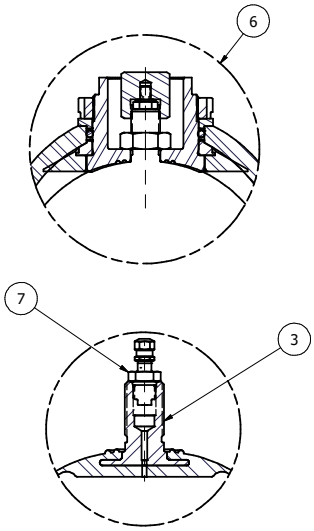

1. **Shell** - Bladder accumulator shells are made from chromemolybdenum alloy steel (SA372) with forged ends. All sizes comply with ASME material and design specifications. One gallon and larger supplied with ASME Certification as standard.
2. **Bladder** - Greer bladders, the heart and soul of a bladder accumulator, are manufactured in-house to control the material blending, molding, critical seam assembly, and curing processes. It is widely accepted that Greer bladders are the highest quality bladders in the industry. Bladders are offered in five different standard compounds to suit a wide variety of fluids and operating temperatures. Special compounds are available for unusual or severe applications.
3. **Bladder Stems -** All bladder accumulators, sizes 1 gallon and larger, are fitted as standard with two-piece bladder stems with replaceable gas valve cartridge for ease of serviceability. Also, the two-piece stem will accept high-flow poppet type gas valves and permanent mount gauge adapters.
4. **Port Assemblies -** Standard oil service ports are made from high-strength alloy steel for maximum durability. Chemical service port assemblies are made from stainless steel for maximum corrosion resistance. The water service components are Electroless Nickel Plated.
5. **Fluid Ports** - SAE straight thread, NPTF, SAE Code 61 and SAE Code 62 4-bolt split flange ports are available. Bleed ports are included as standard on sizes 1 gallon and larger; not available on flange ports.
6. **Top Repairable** - The top repairable design permits easy checking and maintenance of the bladder without removing the accumulator from the system, saving time and money.
7. **Gas Valve** - All accumulators are fitted with a gas valve for ease of gas precharging. One-gallon and larger 3000 PSI units are equipped with a cored gas valve cartridge (ISO-4570-8V1) for ease of maintenance. 5000 PSI units are equipped with a of a high-flow poppet gas valve cartridge. For safety, the gas valve vents if unscrewed.

Maximum Flow Rates

Size (Gallon)	Max. Recommended Flow for Standard Mineral Oils	
	GPM	LPM
10 cu in	23	87
1 pt	40	151
1 qt &150 cu in	60	227
1	150	568
2.5 thru 15	220	833

Standard and Optional Fluid Ports

The following standard and optional fluid ports are offered on all Bottom Repairable, Top Repairable, and Transfer Barrier accumulators. See How to Order at the end of this section for complete ordering instructions.

Sizes	Standard Port	Optional Ports				
	SAE Str. Thread Code T	SAE 4-Bolt Split Flange Code F	NPTF Code U	Undersize NPTF Code X	BSPP Code R	SAE 4-Bolt Split Flange* Code L
3000 PSI (207 Bar) Models						
10 cu in	SAE #8	-	3/4" Male	-	-	-
1 pt.	SAE #12	-	3/4"	-	G 3/4"	-
1 qt. & 150 cu in	SAE #16	-	1"	3/4"	G 1"	-
1 gal	SAE #20	1-1/4", Code 62	1-1/4"	-	G 1-1/4"	1-1/4", Code 61
2.5 to 15 gal.	SAE #24	1-1/2", Code 62	2"	1-1/4"	G 2"	2", Code 61
5000 PSI (345 Bar) Models						
1 gal.	SAE #20	1-1/4", Code 62	1-1/4"	-	G 1-1/4"	-
2.5 to 15 gal.	SAE #24	1-1/2", Code 62	2"	1-1/4"	G 2"	-

* “L” Code 61 flange model design pressure limited to: (ASME-3,000 PSI, PED [207 Bar])

⚠ **PROP 65 WARNING** **WARNING:** This product can expose you to chemicals including Lead and Lead Compounds which are known to the State of California to cause cancer and birth defects or other reproductive harm. For more information go to www.P65Warnings.ca.gov

Gas Valves

Core Style

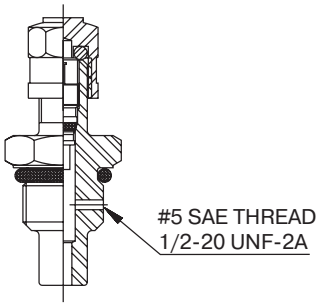

L07688000Q

Poppet Style

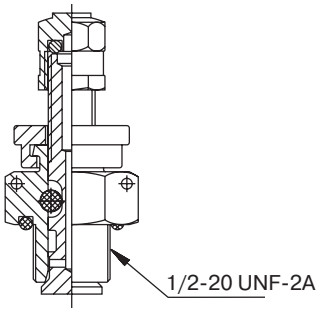

L07710T5K9

EMA-3 Style

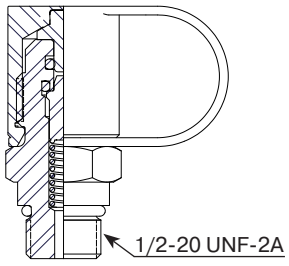

L07734000Q

Gas Valves			
Series	**Bore Size**	**Standard Valve**	**Options**
3000	1 - 15 gal	Cored (L07688000Q)	Poppet (L07689000Q) EMA-3 (L07734000Q)
5000	Bottom Repairable	Poppet (L07689000Q)	EMA-3 (L07734000Q)
5000	All	Poppet (L077170009)	EMA-3 (L07734000Q)

SAE 4-Bolt Flange Port Dimensions

Standard Pressure - Code 61 (ISO 6162) - 3000 PSI (207 Bar)

Flange Size	SAE Flange Dimensions (in.)					ISO 6162 Flange Dimensions (mm)				
	A	B	C	F	G	A	B	C	F	G
1-1/4"	7/16-4	1.188	2.312	1-1/2	1.000	M10	30.2	58.7	32	25.4
2"	1/2-3	1.688	3.062	2	1.062	M12	42.9	77.8	51	26.9

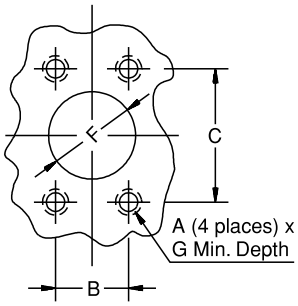

High Pressure - Code 62 (ISO 6162) - 6000 PSI (410 Bar)

Flange Size	SAE Flange Dimensions (in.)					ISO 6162 Flange Dimensions (mm)				
	A	B	C	F	G	A	B	C	F	G
1-1/4"	1/2-13	1.250	2.625	1-1/4	1.000	M16	31.8	66.7	32	25.4
1-1/2"	5/8-11	1.438	3.125	1-1/2	1.375	M16	36.5	79.4	38	34.9

Flange end tor SAE J518 Code 61/62
NOTE: 4-bolt split flange halves (not included).

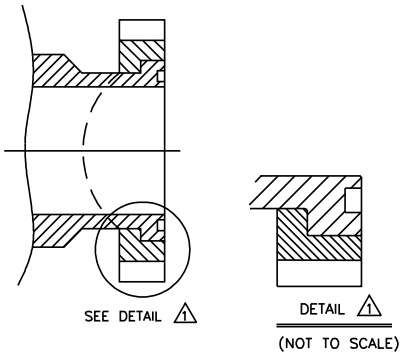

⚠ PROP 65 WARNING **WARNING:** This product can expose you to chemicals including Lead and Lead Compounds which are known to the State of California to cause cancer and birth defects or other reproductive harm. For more information go to www.P65Warnings.ca.gov

Dimensions - Bottom Repairable

BA Series

The simplicity and cost effectiveness of the bottom repairable design has made it the “Industry Standard” bladder accumulator. Sizes range from 10 cu. in. to 15 gallons.

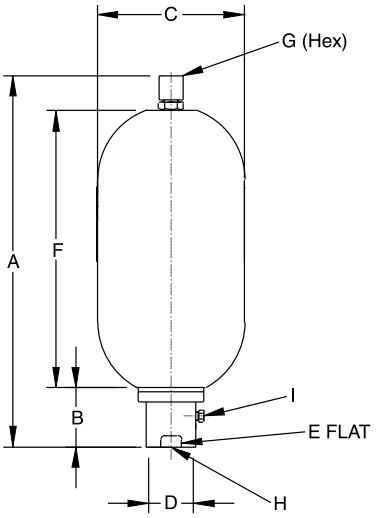

3000 PSI ASME, 330 BAR PED

Models	Nominal Size Gallon (Liters)	Gas Volume cu in (Liters)	Dimensions, inch (mm)							Hydraulic Ports		Weight lbs. (Kg.)
Oil Service Water Service			A	B	C	D	E	F	G	H (Thread)	I (Thread)	
BAC10B3T01Y2 BAC10B3T01WY2	10 cu in (0.16)	12 (0.21)	11.18 (284)	1.89 (48)	2.00 (51)	1.03 (26)	0.94 (24)	7.75 (197)	0.94 (24)	SAE #8 (3/4 - 16)	N/A	3.5 (1.6)
BA001B3T01Y2 BA001B3T01WY2	1 Pt. (0.47)	31 (0.51)	10.75 (273)	2.00 (51)	3.40 (86)	1.39 (35)	1.31 (33)	6.87 (174)	0.94 (24)	SAE #12 (1-1/16-12)	N/A	8 (3.6)
BA002B3T01Y2 BA002B3T01WY2	1 Qt. (0.95)	66 (1.08)	10.93 (278)	1.95 (49)	4.50 (114)	1.62 (41)	1.50 (38)	7.5 (191)	0.94 (24)	SAE #16 (1-5/16-12)	N/A	10 (4.5)
BA005B3T01Y2 BA005B3T01WY2	150 cu in (2.5)	156 (2.56)	18.93 (481)	1.95 (49)	4.50 (114)	1.62 (41)	1.50 (38)	15.50 (394)	0.94 (24)	SAE #16 (1-5/16-12)	N/A	16 (7.4)
BA01B3T01P2 BA01B3T01WP2	1 (3.79)	231 (3.79)	17.26 (439)	3.44 (88)	6.61 (168)	2.37 (60)	2.13 (54)	11.5 (292)	1.25 (32)	SAE #20 (1-5/8-12)	SAE #6 (9/16-18)	30 (13.4)
BA02B3T01P2 BA02B3T01WP2	2.5 (9.46)	556 (9.11)	21.60 (549)	3.62 (92)	8.78 (223)	3.00 (76)	2.88 (73)	15.75 (400)	1.25 (32)	SAE #24 (1-7/8-12)	SAE #6 (9/16-18)	62 (28)
BA05B3T01P2 BA05B3T01WP2	5 (18.9)	1124 (18.42)	33.85 (860)	3.62 (92)	8.78 (223)	3.00 (76)	2.88 (73)	28.00 (711)	1.25 (32)	SAE #24 (1-7/8-12)	SAE #6 (9/16-18)	98 (44)
BA10B3T01P2 BA10B3T01WP2	10 (37.9)	2097 (34.36)	54.85 (1393)	3.62 (92)	8.78 (223)	3.00 (76)	2.88 (73)	49.00 (1245)	1.25 (32)	SAE #24 (1-7/8-12)	SAE #6 (9/16-18)	160 (73)
BA11B3T01P2 BA11B3T01WP2	11 (41.6)	2400 (39.33)	59.98 (1523)	3.62 (92)	8.78 (223)	3.00 (76)	2.88 (73)	54.13 (1523)	1.25 (32)	SAE #24 (1-7/8-12)	SAE #6 (9/16-18)	175 (79)
BA15B3T01P2 BA15B3T01WP2	15 (56.8)	3267 (53.54)	77.88 (1978)	3.62 (92)	8.78 (223)	3.00 (76)	2.88 (73)	72.00 (1830)	1.25 (32)	SAE #24 (1-7/8-12)	SAE #6 (9/16-18)	228 (103)

5000/6600 PSI ASME/ASME APPENDIX 22

Models	Nominal Size Gallon (Liters)	Gas Volume cu in (Liters)	Dimensions, inch (mm)							Hydraulic Ports		Weight lbs. (Kg.)
Oil Service Water Service			A	B	C	D	E	F	G	H (Thread)	I (Thread)	
BA01B5T01NA1 BA01B5T01TA1	1 (3.79)	231 (3.79)	17.35 (441)	3.25 (83)	7.14 (181)	2.25 (57)	N/A	11.44 (291)	1.44 (37)	SAE #20 (1-5/8-12)	SAE #6 (9/16-18)	45 (20)
BA02B5T01A1 BA02B5T01WA1	2.5 (9.46)	556 (9.11)	23.38 (594)	3.88 (99)	9.63 (245)	3.00 (76)	2.88 (73)	16.25 (413)	2.50 (64)	SAE #24 (1-7/8-12)	SAE #6 (9/16-18)	116 (53)
BA05B5T01A1 BA05B5T01WA1	5 (18.9)	1124 (18.42)	35.38 (899)	3.88 (99)	9.63 (245)	3.00 (76)	2.88 (73)	28.25 (718)	2.50 (64)	SAE #24 (1-7/8-12)	SAE #6 (9/16-18)	191 (87)
BA10B5T01A1 BA10B5T01WA1	10 (37.9)	2097 (34.36)	56.13 (1426)	3.88 (99)	9.63 (245)	3.00 (76)	2.88 (73)	49.00 (1245)	2.50 (64)	SAE #24 (1-7/8-12)	SAE #6 (9/16-18)	321 (146)
BA15B5T01A1 BA15B5T01WA1	15 (56.8)	3267 (53.54)	79.13 (2010)	3.88 (99)	9.63 (245)	3.00 (76)	2.88 (73)	72.00 (1828)	2.50 (64)	SAE #24 (1-7/8-12)	SAE #6 (9/16-18)	466 (211)

Dimensions - Top Repairable

BA Series

The Top Repairable Accumulator permits easy checking and maintenance of the bladder without removing the accumulator from the service line, saving time and money. Sizes range from 2-1/2 to 15 gallons.

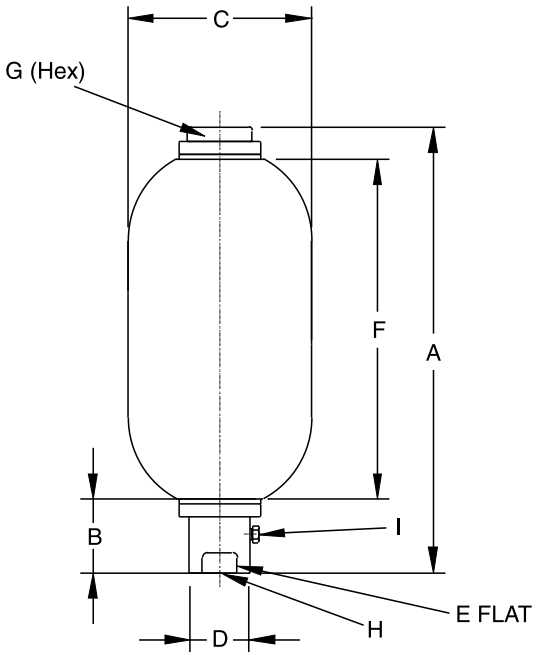

3000 /3600 PSI ASME/ASME APPENDIX 22, 330 BAR PED

Models	Nominal Size Gallon (Liters)	Gas Volume cu in (Liters)	Dimensions, inch (mm)							Hydraulic Ports		Weight lbs. (Kg.)
Oil Service Water Service			A	B	C	D	E	F	G	H (Thread)	I (Thread)	
BA02T3T01P2 BA02T3T01WP2	2.5 (9.45)	541 (8.87)	20.98 (533)	3.62 (92)	8.78 (223)	3.00 (76)	2.88 (73)	15.75 (400)	1.25 (32)	SAE #24 (1-7/8-12)	SAE #6 (9/16-18)	67 (30)
BA05T3T01P2 BA05T3T01WP2	5 (18.9)	1110 (18.19)	32.23 (844)	3.62 (92)	8.78 (223)	3.00 (76)	2.88 (73)	28.00 (711)	1.25 (32)	SAE #24 (1-7/8-12)	SAE #6 (9/16-18)	103 (47)
BA10T3T01P2 BA10T3T01WAP2	10 (37.8)	2083 (34.13)	54.23 (1378)	3.62 (92)	8.78 (223)	3.00 (76)	2.88 (73)	49.00 (1245)	1.25 (32)	SAE #24 (1-7/8-12)	SAE #6 (9/16-18)	165 (75)
BA11T3T01P2 BA11T3T01WP2	11 (41.6)	2386 (39.1)	59.36 (1508)	3.62 (92)	8.78 (223)	3.00 (76)	2.88 (73)	54.13 (1523)	1.25 (32)	SAE #24 (1-7/8-12)	SAE #6 (9/16-18)	180 (82)
BA15T3T01P2 BA15T3T01WP2	15 (56.7)	3253 (53.31)	77.23 (1962)	3.62 (92)	8.78 (223)	3.00 (76)	2.88 (73)	72.00 (1829)	1.25 (32)	SAE #24 (1-7/8-12)	SAE #6 (9/16-18)	232 (105)

5000/6600 PSI ASME/ASME APPENDIX 22

Models	Nominal Size Gallon (Liters)	Gas Volume cu in (Liters)	Dimensions, inch (mm)							Hydraulic Ports		Weight lbs. (Kg.)
Oil Service Water Service			A	B	C	D	E	F	G	H (Thread)	I (Thread)	
BA02T5T01A1 BA02T5T01WA1	2.5 (9.46)	541 (8.87)	23.22 (533)	3.88 (99)	9.63 (245)	3.00 (76)	2.88 (73)	16.25 (413)	1.25 (32)	SAE #24 (1-7/8-12)	SAE #6 (9/16-18)	118 (54)
BA05T5T01A1 BA05T5T01WA1	5 (18.9)	1110 (18.19)	35.22 (895)	3.88 (99)	9.63 (245)	3.00 (76)	2.88 (73)	28.25 (718)	1.25 (32)	SAE #24 (1-7/8-12)	SAE #6 (9/16-18)	193 (88)
BA10T5T01A1 BA10T5T01WA1	10 (37.8)	2083 (34.13)	55.97 (1422)	3.88 (99)	9.63 (245)	3.00 (76)	2.88 (73)	49.00 (1245)	1.25 (32)	SAE #24 (1-7/8-12)	SAE #6 (9/16-18)	323 (147)
BA15T5T01A1 BA15T5T01WA1	15 (56.8)	3253 (53.31)	78.97 (2006)	3.88 (99)	9.63 (245)	3.00 (76)	2.88 (73)	72.00 (1828)	1.25 (32)	SAE #24 (1-7/8-12)	SAE #6 (9/16-18)	468 (212)

⚠ **PROP 65 WARNING** **WARNING:** This product can expose you to chemicals including Lead and Lead Compounds which are known to the State of California to cause cancer and birth defects or other reproductive harm. For more information go to www.P65Warnings.ca.gov

The Transfer Barrier accumulator provides positive separation between two different medias or can be used with gas bottles. Sizes range from 2-1/2 to 15 gallons.

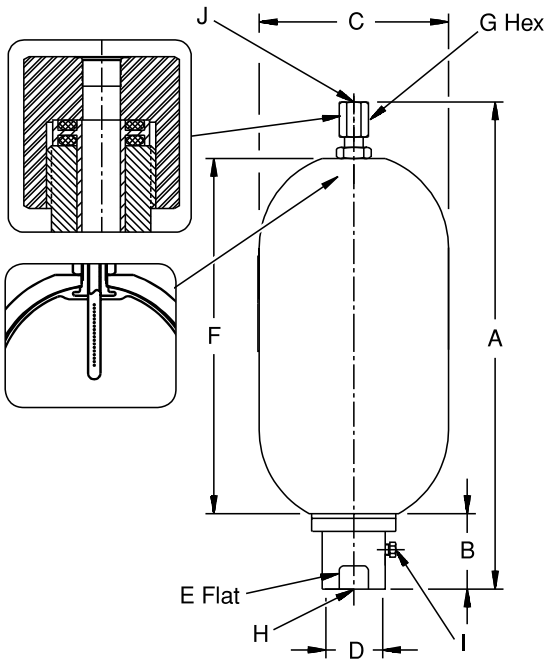

3000/3600 PSI ASME/ASME APPENDIX 22, 330 BAR PED

Models	Nominal Size Gallon (Liters)	Gas Volume cu in (Liters)	Dimensions, inch (mm)							Hydraulic Ports			Weight lbs. (Kg.)
Oil Service Water Service			A	B	C	D	E	F	G	H (Thread)	I (Thread)	J (Thread)	
BT02B3TT01P2 BT02B3TT01WP2	2.5 (9.45)	556 (9.11)	22.64 (575)	3.62 (92)	8.78 (223)	3.00 (76)	2.88 (73)	15.75 (400)	2.00 (51)	SAE #24 (1-7/8-12)	SAE #6 (9/16-18)	SAE #12 (1-1/6-12)	64 (29)
BT05B3TT01P2 BT05B3TT01WP2	5 (18.9)	1124 (18.42)	34.89 (886)	3.62 (92)	8.78 (223)	3.00 (76)	2.88 (73)	28.00 (711)	2.00 (51)	SAE #24 (1-7/8-12)	SAE #6 (9/16-18)	SAE #12 (1-1/6-12)	100 (45)
BT10B3TT01P2 BT10B3TT01WP2	10 (37.8)	2097 (34.36)	55.89 (1420)	3.62 (92)	8.78 (223)	3.00 (76)	2.88 (73)	49.00 (1245)	2.00 (51)	SAE #24 (1-7/8-12)	SAE #6 (9/16-18)	SAE #12 (1-1/6-12)	162 (74)
BT11B3TT01P2 BT11B3TT01WP2	11 (41.6)	2400 (39.33)	61.02 (1550)	3.62 (92)	8.78 (223)	3.00 (76)	2.88 (73)	54.13 (1523)	2.00 (51)	SAE #24 (1-7/8-12)	SAE #6 (9/16-18)	SAE #12 (1-1/6-12)	177 (80)
BT15B3TT01P2 BT15B3TT01WP2	15 (56.7)	3267 (53.54)	78.89 (2004)	3.62 (92)	8.78 (223)	3.00 (76)	2.88 (73)	72.00 (1829)	2.00 (51)	SAE #24 (1-7/8-12)	SAE #6 (9/16-18)	SAE #12 (1-1/6-12)	230 (105)

5000/6600 PSI ASME/ASME APPENDIX 22

Models	Nominal Size Gallon (Liters)	Gas Volume cu in (Liters)	Dimensions, inch (mm)							Hydraulic Ports			Weight lbs. (Kg.)
Oil Service Water Service			A	B	C	D	E	F	G	H (Thread)	I (Thread)	J (Thread)	
BT02B5TT01A1 BT02B5TT01WA1	2.5 (9.45)	556 (9.11)	23.60 (599)	3.62 (92)	8.78 (223)	3.00 (76)	2.88 (73)	16.25 (413)	2.00 (51)	SAE #24 (1-7/8-12)	SAE #6 (9/16-18)	SAE #12 (1-1/6-12)	117 (53)
BT05B5TT01A1 BT05B5TT01WA1	5 (18.9)	1124 (18.42)	35.60 (904)	3.62 (92)	8.78 (223)	3.00 (76)	2.88 (73)	28.25 (718)	2.00 (51)	SAE #24 (1-7/8-12)	SAE #6 (9/16-18)	SAE #12 (1-1/6-12)	192 (87)
BT10B5TT01A1 BT10B5TT01WA1	10 (37.8)	2097 (34.36)	56.35 (1431)	3.62 (92)	8.78 (223)	3.00 (76)	2.88 (73)	49.00 (1245)	2.00 (51)	SAE #24 (1-7/8-12)	SAE #6 (9/16-18)	SAE #12 (1-1/6-12)	322 (146)
BT15B5TT01A1 BT15B5TT01WA1	15 (56.7)	3267 (53.54)	79.35 (2015)	3.62 (92)	8.78 (223)	3.00 (76)	2.88 (73)	72.00 (1828)	2.00 (51)	SAE #24 (1-7/8-12)	SAE #6 (9/16-18)	SAE #12 (1-1/6-12)	527 (239)

⚠ **PROP 65 WARNING** **WARNING:** This product can expose you to chemicals including Lead and Lead Compounds which are known to the State of California to cause cancer and birth defects or other reproductive harm. For more information go to www.P65Warnings.ca.gov

Standard and Optional Bladders

A variety of bladders are offered to suit a wide range of fluids and operating temperatures. The following table lists the optional bladders available, their recommended operating temperature ranges, and the types of fluids that are generally compatible.

Seal Code	Polymer	**Recommended Operating Temperature Range	Maximum Temperature with Reduced Life	General Application & Compatibility*
01	Buna-Nitrile	5°F to 200°F -15°C to 93°C	225°F 107°C	Standard Compound - Compatible with most mineral oil-based fluids
04	Hydrin (Low-Temp)	-40°F to 194°F -40°C to 90°C	212°F 100°C	Compatible with most mineral oil-based fluids with enhanced low temperature performance
06	Butyl	-40°F to 200°F -40°C to 93°C	300°F 149°C	Compatible with most phosphate ester fluids and some synthetic fluids
08	Ethylene Propylene	-40°F to 200°F -40°C to 93°C	300°F 149°C	Compatible with some synthetic fluids and water
28	Fluorocarbon Elastomer	5°F to 300°F -15°C to 149°C	400°F 232°C	Compatible with most mineral oil-based fluids at higher temperatures and some exotic fluids

• Consult your local distributor or the factory for fluid compatibility information.
• • Temperature ranges may vary depending upon the fluid used in the hydraulic system.

Water (W) & Chemical Service (H) Options

Bladder accumulators are available with a water or chemical service option.

The (W) designation includes an internal/ external Electroless Nickel Plated (ENP) shell and stainless steel or ENP port assembly and internal wetted parts.

The (H) designation includes an internal Skotchkote shell and all stainless steel fittings and trim, which offers added protection against more corrosive fluids.

Special Options

If your application requires a bladder accumulator, gas bottle, or special option that falls outside of Parker's broad offering, consult your local distributor, Parker representative, or the factory with your specific requirements. Parker has the manufacturing and engineering expertise to design and build bladder accumulators to your exacting requirements, from simple modifications of standard units to complete designs. Some examples of Parker's past special designs include:

- Special and Stainless Steel Materials
- Special Bladder Compounds
- Suction Stabilizer
- Pulsation Dampener
- Special Certifications

Consult the experts at Parker with your next bladder accumulator requirement!

Bladder Kits

A full range of genuine Greer replacement bladder kits are available to bring your accumulator back to original condition should replacement become necessary. All bladder kits include port o-ring, backup seals and gas valves with secondary seals.

Bladder & Seal Compound					
Size	**Group 01 Nitrile (NBR)**	**Group 04 Hydrin**	**Group 06 Butyl**	**Group 08 EPR**	**Group 28 Fluorocarbon**
3,000 PSI Standard Bladder Kits (Top & Bottom Repairable)					
10 Cu. In.	702900	702902	702903	702904	702906
1 Pt.	702914	702916	702917	702918	702920
1 Qt.	702928	702930	702931	702932	702934
150 Cu. In.	E702942	E702944	E702945	E702946	E702948
1 Gal.	E702956	E702958	E702959	E702960	E702962
2 1/2 Gal.	E702970	E702972	E702973	E702974	E702976
5 Gal.	E702984	E702986	E702987	E702988	E702990
10 Gal.	E702998	E703000	E703001	E703002	E703004
11 Gal.	E703012	E703014	E703015	E703016	E703018
15 Gal.	E703026	E703028	E703029	E703030	E703032
5,000 PSI Bottom Repairable Bladder Kits (2" Valve Stem -New Style)					
1 Gal. 7/8" Ø Stem	8741630001	87416330004	8741630006	8741630008	8741630028
2 1/2 Gal.	706000	706002	706003	706004	706006
5 Gal.	706010	706012	706013	706014	706016
10 Gal.	706020	706022	706023	706024	706026
15 Gal.	706030	706032	706033	706034	706036

Mounting, Charging & Gauging Accessories

Parker offers a wide variety of mounting, charging and gauging accessories. See Accumulator Accessories Brochure.

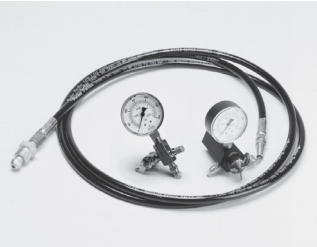

⚠ **PROP 65 WARNING** **WARNING:** This product can expose you to chemicals including Lead and Lead Compounds which are known to the State of California to cause cancer and birth defects or other reproductive harm. For more information go to www.P65Warnings.ca.gov

Series	Size	Construction	Gas Pressure	Hyd. Port	Bladder/Seal Compound	Design Modification	Design Code	Precharge Designation
BA	001	B	3	T	01	- P	2	-H

Series	
BA	Accumulator
BG	Gas Bottle
BT	Transfer Barrier

Size		Available 3000 PSI	Available 5000 PSI
C10	10 Cl	*	
001	1 Pint	*	
002	1 Quart	*	
005	150 Cl	*	
01	1 Gallon	*	*
02	2½ Gallon	*	*
05	5 Gallon	*	*
10	10 Gallon	*	*
11	11 Gallon	*	
15	15 Gallon	*	*

Type of Construction	
B	Bottom Repairable Standard on all sizes
T	Top Repairable Optional for 2 1/2 Gallon and up

Working Pressure	
3	3,000 PSI / 3,600 (330 bar PED)*
5	5,000 PSI / 6,600 PSI

Hydraulic Port		
T	**SAE Straight Thread O-Ring (Standard)**	
	10 Cl	SAE #8
	1 Pint	SAE #12
	1 Quart &150 Cl	SAE #16
	1 Gallon	SAE #20
	2½ Gallon Thru 15 Gallon	SAE #24
U	**NPT Pipe (No Cost Option)**	
	10 Cl	3/4" NPT Male
	1 Pint	3/4" NPTF
	1 Quart &150 Cl	1" NPTF
	1 Gallon	1¼"NPTF
	2½ Gallon thry 15 Gallon	2" NPTF
F	**SAE 4-bolt Code 62 (No Cost Option)**	
	10 Cl thru 150 Cl (3K)	N/A
	1 Gallon (3K & 5K)	1¼" Code 62 (6000 PSI)
	2½ Gal thru 15 Gal (3K & 5K)	1½" Code 62 (6000 PSI)
L**	**SAE 4-bolt Code 61 Flange (No Cost Option)**	
	10 Cl thru 150 Cl (3K)	N/A
	1 Gallon (3K)	1¼" Code 61 (3000 PSI)
	2½ Gal thru 15 Gal (3K)	2" Code 61 (3000 PSI)
X	**NPT Pipe Undersized (No Cost Option)**	
	1 QT - 150 Cl	3/4" NPTF
	2½ Gallon thru 15 Gallon (3000/5000 PSI)	1¼" NPTF
R	**BSPP**	
	10 Cl	N/A
	1 Pint	3/4-14
	1 Quart & 150 Cl	1-11
	1 Gallon	1¼-11
	2½ Gallon thru 15 Gallon	2-11
S	**Special**	

Precharge Designation
-H Precharge Designation for standard units only*

Design Code	
1	Standard for ASME
2	ASME / PED
*****	Number given

Design Modification (1st Digit)	
Blank	Standard
W	Water
H	Chemical Service
N	Poppet Type

Design (2nd Digit)	
P	ASME - Appendix 22 / PED
S	Special
Y	Non-ASME / PED
A	ASME / Appendix 22

Consult factory when using water/ chemical service with any port other than the standard SAE.

Bladder / Seal Compound	
01	Buna-Nitrile (Std.)
04	Hydrin (Optional)
06	Butyl (Optional)
08	EPR (Optional)
28	Fluoroelastomer (Optional)

* For 1 gal: 3,000 / 4,000 PSI (330 bar PED)
For sizes smaller than 1 gal: 3,000 PSI (330 bar PED)

** Limited to 207 bar PED by port rating

*The precharge pressure must be added to the end of the part number at time of order. i.e. -500 for 500 PSI precharge

The items described in this document and other documents and descriptions provided by Parker Hannifin Corporation, its subsidiaries and its authorized distributors ("Seller") are hereby offered for sale at prices to be established by Seller. This offer and its acceptance by any customer ("Buyer") shall be governed by all of the following Terms and Conditions. Buyer's order for any item described in its document, when communicated to Seller verbally, or in writing, shall constitute acceptance of this offer. All goods, services or work described will be referred to as "Products".

1. Terms. All sales of Products by Seller will be governed by, and are expressly conditioned upon Buyer's assent to, these Terms. These Terms are incorporated into any Quote provided by Seller to Buyer. Buyer's order for any Products whether communicated to Seller verbally, in writing, by electronic data interface or other electronic commerce, shall constitute acceptance of these Terms. Seller objects to any contrary or additional terms or conditions of Buyer. Reference in Seller's order acknowledgement to Buyer's purchase order or purchase order number shall in no way constitute an acceptance of any of Buyer's terms or conditions of purchase. Any Quote made by Seller to Buyer shall be considered a firm and definite offer and shall not be deemed to be otherwise despite any language on the face of the Quote. Seller reserves all rights to accept or reject any purported acceptance by Buyer to Seller's Quote if such purported acceptance attempts to vary the terms of the Quote. If Seller ships Products after Buyer issues an acceptance to the Quote, any additional or different terms proposed by Buyer will not become part of the parties' business relationship unless agreed to in a writing that is signed by an authorized representative of Seller, excluding email correspondence. If the transaction proceeds without such agreement on the part of Seller, the business relationship will be governed solely by these Terms and the specific terms in Seller's Quote.

2. Price; Payment. The Products set forth in the Quote are offered for sale at the prices indicated in the Quote. Unless otherwise specifically stated in the Quote, prices are valid for thirty (30) days and do not include any sales, use, or other taxes or duties. Seller reserves the right to modify prices for any reason and at any time by giving ten (10) days prior written notice. Unless otherwise specified by Seller, all prices are F.C.A. Seller's facility (INCOTERMS 2020). All sales are contingent upon credit approval and full payment for all purchases is due thirty (30) days from the date of invoice (or such date as may be specified in the Quote). Under any circumstances, Buyer may not withhold or suspend payment of any amounts due and payable as a deduction, set-off or recoupment of any amount, claim or dispute with Seller. Unpaid invoices beyond the specified payment date incur interest at the rate of 1.5% per month or the maximum allowable rate under applicable law. Seller reserves the right to require advance payment or provision of securities for first and subsequent deliveries if there is any doubt, in Seller's sole determination, regarding the Buyer's creditworthiness or for other business reasons. If the requested advance payment or securities are not provided to Seller's satisfaction, Seller reserves the right to suspend performance or reject the purchase order, in whole or in part, without prejudice to Seller's other rights or remedies, including the right to full compensation. Seller may revoke or shorten any payment periods previously granted in Seller's sole determination. The rights and remedies herein reserved to Seller are cumulative and in addition to any other or further rights and remedies available at law or in equity. No waiver by Seller of any breach by Buyer of any provision of these terms will constitute a waiver by Seller of any other breach of such provision.

3. Shipment; Delivery; Title and Risk of Loss. All delivery dates are approximate, and Seller is not responsible for damages or additional costs resulting from any delay. All deliveries are subject to our ability to procure materials from our suppliers. Regardless of the manner of shipment, delivery occurs and title and risk of loss or damage pass to Buyer, upon placement of the Products with the carrier at Seller's facility. Unless otherwise agreed prior to shipment and for domestic delivery locations only, Seller will select and arrange, at Buyer's sole expense, the carrier and means of delivery. When Seller selects and arranges the carrier and means of delivery, freight and insurance costs for shipment to the designated delivery location will be prepaid by Seller and added as a separate line item to the invoice. Buyer shall be responsible for any additional shipping charges incurred by Seller due to Buyer's acts or omissions. Buyer shall not return or repackage any Products without the prior written authorization from Seller, and any return shall be at the sole cost and expense of Buyer.

4. Warranty. The warranty for the Products is as follows: (i) Goods are warranted against defects in material or workmanship for a period of eighteen (18) months from the date of delivery or 2,000 hours of use, whichever occurs first; (ii) Services shall be performed in accordance with generally accepted practices and using the degree of care and skill that is ordinarily exercised and customary in the field to which the Services pertain and are warranted for a period of six (6) months from the date of completion of the Services; and (iii) Software is only warranted to perform in accordance with applicable specifications provided by Seller to Buyer for ninety (90) days from the date of delivery or, when downloaded by a Buyer or end-user, from the date of the initial download. All prices are based upon the exclusive limited warranty stated above, and upon the following disclaimer: **EXEMPTION CLAUSE; DISCLAIMER OF WARRANTY, CONDITIONS, REPRESENTATIONS: THIS WARRANTY IS THE SOLE AND ENTIRE WARRANTY, CONDITION, AND REPRESENTATION, PERTAINING TO PRODUCTS. SELLER DISCLAIMS ALL OTHER WARRANTIES, CONDITIONS, AND REPRESENTATIONS, WHETHER STATUTORY, EXPRESS OR IMPLIED, INCLUDING BUT NOT LIMITED TO THOSE RELATING TO DESIGN, NONINFRINGEMENT, MERCHANTABILITY, AND FITNESS FOR A PARTICULAR PURPOSE. SELLER DOES NOT WARRANT THAT THE SOFTWARE IS ERROR-FREE OR FAULT-TOLERANT, OR THAT BUYER'S USE THEREOF WILL BE SECURE OR UNINTERRUPTED, UNLESS OTHERWISE AUTHORIZED IN WRITING BY SELLER, THE SOFTWARE SHALL NOT BE USED IN CONNECTION WITH HAZARDOUS OR HIGH-RISK ACTIVITIES OR ENVIRONMENTS. EXCEPT AS EXPRESSLY STATED HEREIN, ALL PRODUCTS ARE PROVIDED "AS IS".**

5. Claims; Commencement of Actions. Buyer shall promptly inspect all Products upon receipt. No claims for shortages will be allowed unless reported to Seller within ten (10) days of delivery. Buyer shall notify Seller of any alleged breach of warranty within thirty (30) days after the date the non-conformance is or should have been discovered by Buyer. Any claim or action against Seller based upon breach of contract or any other theory, including tort, negligence, or otherwise must be commenced within twelve (12) months from the date of the alleged breach or other alleged event, without regard to the date of discovery.

6. LIMITATION OF LIABILITY. IN THE EVENT OF A BREACH OF WARRANTY, SELLER WILL, AT ITS OPTION, REPAIR OR REPLACE THE NON-CONFORMING PRODUCTS, RE-PERFORM THE SERVICES, OR REFUND THE PURCHASE PRICE PAID WITHIN A REASONABLE PERIOD OF TIME. IN NO EVENT IS SELLER LIABLE FOR ANY SPECIAL, INDIRECT, INCIDENTAL OR CONSEQUENTIAL DAMAGES INCLUDING ANY LOSS OF REVENUE OR PROFITS, WHETHER BASED IN CONTRACT, TORT OR OTHER LEGAL THEORY. IN NO EVENT SHALL SELLER'S LIABILITY UNDER ANY CLAIM MADE BY BUYER EXCEED THE PURCHASE PRICE PAID FOR THE PRODUCTS.

7. Confidential Information. Buyer acknowledges and agrees that Confidential Information has been and will be received in confidence and will remain the property of Seller. Buyer further agrees that it will not use Seller's Confidential Information for any purpose other than for the benefit of Seller and shall return all such Confidential Information to Seller within thirty (30) days upon request.

8. Loss to Buyer's Property. Buyer's Property will be considered obsolete and may be destroyed by Seller after two (2) consecutive years have elapsed without Buyer ordering the Products manufactured using Buyer's Property. Also, Seller shall not be responsible for any loss or damage to Buyer's Property while it is in Seller's possession or control.

9. Special Tooling. Seller may impose a tooling charge for any Special Tooling. Special Tooling shall be and remain Seller's property. In no event will Buyer acquire any interest in the Special Tooling, even if such Special Tooling has been specially converted or adapted for manufacture of Goods for Buyer and notwithstanding any charges paid by Buyer. Unless otherwise agreed, Seller has the right to alter, discard or otherwise dispose of any Special Tooling or other property owned by Seller in its sole determination at any time.

10. Security Interest. To secure payment of all sums due from Buyer, Seller retains a security interest in all Products delivered to Buyer and, Buyer's acceptance of these Terms is deemed to be a Security Agreement under the Uniform Commercial Code. Buyer authorizes Seller as its attorney to execute and file on Buyer's behalf all documents Seller deems necessary to perfect Seller's security interest.

11. User Responsibility. Buyer, through its own analysis and testing, is solely responsible for making the final selection of the Products and assuring that all performance, endurance, maintenance, safety and warning requirements of the application of the Products are met. Buyer must analyze all aspects of the application and follow applicable industry standards, specifications, and any technical information provided with the Quote or the Products, such as Seller's instructions, guides and specifications. If Seller provides options of or for Products based upon data or specifications provided by Buyer, Buyer is responsible for determining that such data and specifications are suitable and sufficient for all applications and reasonably foreseeable uses of the Products. In the event Buyer is not the end-user of the Products, Buyer will ensure such end-user complies with this paragraph.

12. Use of Products, Indemnity by Buyer. Buyer shall comply with all instructions, guides and specifications provided by Seller with the Quote or the Products. If Buyer uses or resells the Products in any way prohibited by Seller's instructions, guides or specifications, or Buyer otherwise fails to comply with Seller's instructions, guides and specifications, Buyer acknowledges that any such use, resale, or non-compliance is at Buyer's sole risk. Further, Buyer shall indemnify, defend, and hold Seller harmless from any losses, claims, liabilities, damages, lawsuits, judgments and costs (including attorney fees and defense costs), whether for personal injury, property damage, intellectual property infringement or any other claim, arising out of or in connection with: (a) improper selection, design, specification, application, or any misuse of Products; (b) any act or omission, negligent or otherwise, of Buyer; (c) Seller's use of Buyer's Property; (d) damage to the Products from an external cause, repair or attempted repair by anyone other than Seller, failure to follow instructions, guides and specifications provided by Seller, use with goods not provided by Seller, or opening, modifying, deconstructing, tampering with or repackaging the Products; or (e) Buyer's failure to comply with these Terms, including any legal or administrative proceedings, collection efforts, or other actions arising from or relating to such failure to comply. Seller shall not indemnify Buyer under any circumstance except as otherwise provided in these Terms.

13. Cancellations and Changes. Buyer may not cancel or modify, including but not limited to movement of delivery dates for the Products, any order for any reason except with Seller's written consent and upon terms that will indemnify, defend and hold Seller harmless against all direct, incidental and consequential loss or damage and any additional expense. Seller, at any time, may change features, specifications, designs and availability of Products.

14. Assignment. Buyer may not assign its rights or obligations without the prior written consent of Seller.

15. Force Majeure. Seller is not liable for delay or failure to perform any of its obligations by reason of any events or circumstances beyond its reasonable control. Such circumstances include without limitation: accidents, labor disputes or stoppages, government acts or orders, acts of nature, pandemics, epidemics, other widespread illness, or public health emergency, cyber related disruptions, cyber-attacks, ransomware sabotage, delays or failures in delivery from carriers or suppliers, shortages of materials, sudden increases in the price of raw material or components, shutdowns or slowdowns affecting the supply of raw materials or components, or the transportation thereof, oil shortages or oil price increases, energy crisis, energy or fuel interruption, war (whether declared or not) or the serious threat of same, riots, rebellions, acts of terrorism, embargoes, fire or any reason whether similar to the foregoing or otherwise. Seller will resume performance as soon as practicable after the event of force majeure has been removed. All delivery dates affected by an event of force majeure shall be tolled for the duration of such event of force majeure and rescheduled for mutually agreed dates as soon as practicable after the event of force majeure ceases to exist. The right to allocate capacity is in the Seller's sole discretion. An event of force majeure shall not include financial distress, insolvency, bankruptcy, or other similar conditions affecting one of the parties, affiliates and/or sub¬contractors. An event of force majeure in the meaning of these Terms means any circumstances beyond Seller's control that permanently or temporarily hinders performance, even where that circumstance was already foreseen. Buyer shall not be entitled to cancel any orders following its claim of an event of force majeure.

16. Waiver and Severability. Failure to enforce any provision of these Terms will not invalidate that provision; nor will any such failure prejudice either party's right to enforce that provision in the future. Invalidation of any provision of these Terms shall not invalidate any other provision herein and, the remaining provisions will remain in full force and effect.

17. Duration. Unless otherwise stated in the Quote, any agreement governed by or arising from these Terms shall: (a) be for an initial duration of one (1) year; and (b) shall automatically renew for successive one-year terms unless terminated by Buyer with at least 180-days written notice to Seller or if Seller terminates the agreement pursuant to Section 19 of these Terms.

18. Termination. Seller may, without liability to Buyer, terminate any agreement governed by or arising from these Terms for any reason and at any time by giving Buyer thirty (30) days prior written notice. Seller may immediately terminate, in writing, if Buyer: (a) breaches any provision of these Terms, (b) becomes or is deemed insolvent, (c) appoints or has appointed a trustee, receiver or custodian for all or any part of Buyer's property,(d) files a petition for relief in bankruptcy on its own behalf, or one is filed against Buyer by a third party, (e) makes an assignment for the benefit of creditors; or (f) dissolves its business or liquidates all or a majority of its assets.

19. Ownership of Rights. Buyer agrees that (a) Seller (and/or its affiliates) owns or is the valid licensee of Seller's IP and (b) the furnishing of information, related documents or other materials by Seller to Buyer does not grant or transfer any ownership interest or license in or to Seller's IP to Buyer, unless expressly agreed in writing. Without limiting the foregoing, Seller retains ownership of all Software supplied to Buyer. In no event shall Buyer obtain any greater right in and to the Software than a right in a license limited to the use thereof and subject to compliance with any other terms provided with the Software. Buyer further agrees that it will not, directly or through intermediaries, reverse engineer, decompile, or disassemble any Software (including firmware) comprising or contained within a Product, except and only to the extent that such activity may be expressly permitted, either by applicable law or, in the case of open source software, the applicable open source license.

20. Indemnity for Infringement of Intellectual Property Rights. Seller is not liable for infringement of any Intellectual Property Rights except as provided in this Section. Seller will defend at its expense and will pay the cost of any settlement or damages awarded in an action brought against Buyer based on a third-party claim that one or more of the Products infringes the Intellectual Property Rights of a third party in the country of delivery of the Products by Seller to Buyer. Seller's obligation to defend and indemnify Buyer is contingent on Buyer notifying Seller within ten (10) days after Buyer becomes aware of any such claim, and Seller having sole control over the defense of the claim including all negotiations for settlement or compromise. If one or more Products is subject to such a claim, Seller may, at its sole expense and option, procure for Buyer the right to continue using the Products, replace or modify the Products to render them non-infringing, or offer to accept return of the Products and refund the purchase price less a reasonable allowance for depreciation. Seller has no obligation or liability for any claim of infringement: (i) arising from information provided by Buyer (including Seller's use of Buyer's Property); or (ii) directed to any Products for which the designs are specified in whole or part by Buyer; or (iii) resulting from the modification, combination or use in a system of any Products. The foregoing provisions of this Section constitute Seller's sole and exclusive liability and Buyer's sole and exclusive remedy for claims of infringement of Intellectual Property Rights.

21. Governing Law. These Terms, the terms of any Quote, and the sale and delivery of all Products are deemed to have taken place in, and shall be governed and construed in accordance with, the laws of the State of Ohio, as applicable to contracts executed and wholly performed therein and without regard to conflicts of laws principles. Buyer irrevocably agrees and consents to the exclusive jurisdiction and venue of the courts of Cuyahoga County, Ohio with respect to any dispute, controversy or claim arising out of or relating to the sale and delivery of the Products.

22. Entire Agreement. These Terms, along with the terms set forth in the Quote, forms the entire agreement between the Buyer and Seller and constitutes the final, complete and exclusive expression of the terms of sale and purchase. In the event of a conflict between any term set forth in the Quote and these Terms, the terms set forth in the Quote shall prevail. All prior or contemporaneous written or oral agreements or negotiations with respect to the subject matter shall have no effect. No modification to these Terms will be binding on Seller unless agreed to in a writing that is signed by an authorized representative of Seller, excluding email correspondence, 'clickwrap' or other purported electronic assent to different or additional terms. Sections 2-25 of these Terms shall survive termination or cancellation of any agreement governed by or arising from these Terms.

23. No 'Wrap' Agreements/No Authority to Bind. Seller's clicking any buttons or any similar action, such as clicking "I Agree" or "Confirm," to utilize Buyer's software or webpage for the placement of orders, is NOT an agreement to Buyer's Terms and Conditions. NO EMPLOYEE, AGENT OR REPRESENTATIVE OF SELLER HAS THE AUTHORITY TO BIND SELLER BY THE ACT OF CLICKING ANY BUTTON OR SIMILAR ACTION ON BUYER'S WEBSITE OR PORTAL.

24. Compliance with Laws. Buyer agrees to comply with all applicable laws, regulations, and industry and professional standards, including those of the United States of America, and the country or countries in which Buyer may operate, including without limitation the U.S. Foreign Corrupt Practices Act ("FCPA"), the U.S. Anti-Kickback Act ("Anti-Kickback Act"), U.S. and E.U. export control and sanctions laws ("Export Laws"), the U.S. Food Drug and Cosmetic Act ("FDCA"), and the rules and regulations promulgated by the U.S. Food and Drug Administration ("FDA"), each as currently amended. Buyer agrees to indemnify, defend, and hold harmless Seller from the consequences of any violation of such laws, regulations and standards by Buyer, its employees or agents. Buyer represents that it is familiar with all applicable provisions of the FCPA, the Anti-Kickback Act, Export Laws, the FDCA and the FDA and certifies that Buyer will adhere to the requirements thereof and not take any action that would make Seller violate such requirements. Buyer represents and agrees that Buyer will not make any payment or give anything of value, directly or indirectly, to any governmental official, foreign political party or official thereof, candidate for foreign political office, or commercial entity or person, for any improper purpose, including the purpose of influencing such person to purchase Products or otherwise benefit the business of Seller. Buyer further represents and agrees that it will not receive, use, service, transfer or ship any Products from Seller in a manner or for a purpose that violates Export Laws or would cause Seller to be in violation of Export Laws. Buyer agrees to promptly and reliably provide Seller all requested information or documents, including end-user statements and other written assurances, concerning Buyer's ongoing compliance with Export Law. 9/22

9/25 / Catalog HY10-2300

Parker Hannifin Corporation
Hydraulic Actuator Division
500 South Wolf Road
Des Plaines, IL 60016
phone (847) 298-2400
fax (847) 294-2655
www.parker.com/had