EFD/EFDB and EDS Series Factory Sealed Control Stations

Explosionproof, Dust-Ignitionproof

NEC: Class I, Division 1 and 2, Groups B♦, C, D | Class II, Division 1 and 2, Groups E, F, G | Class III | NEMA 3, 7CD, 9EFG

Applications

- Push buttons and selector switches are used in conjunction with contactors or magnetic starters for remote control of motors. They provide circuit control and/or selection.
- Pilot lights provide visual assurance that an electrical function is being performed at a remote or local location.
- EFD/EFDB and EDS factory sealed control stations confine arcing of device within the enclosure, preventing ignition of ignitable atmospheres during control operation of motors and other equipment.
- Used in classified areas where flammable vapors, gases or highly combustible dusts are present.
- For installation in chemical and petrochemical plants, refineries, and other process industries.

Features

- EFD/EFDB Push Buttons and Selector Switches
  - — Eliminate need for adding sealing fittings and compound at each conduit entrance.
  - — Heavy-duty push buttons, 10 Amp, 600 Vac rated.
  - — Dozens of possible combinations of push buttons, pilot lights and selector switches.
  - — Smooth, rounded integral bushing in each EFD/EFDB hub protects conductor insulation.
  - — Accurately tapped, tapered hubs for tight, rigid joints and ground continuity.
  - — Stainless steel push button shaft operates within stainless steel bushing assuring long, maintenance free operation.
  - — Push button and selector switch contacts are silver cadmium oxide which are "sealed" in lower phenolic chamber isolated from corrosive elements. Assures positive contact and long, trouble-free operation.
  - — Enclosed stainless steel helper spring prevents accidental operation of push button in severe vibration installations.
  - — Push button models also available with dust cap for use in areas where excessive dust, moisture or corrosive conditions are encountered.
  - — Corrosion resistant captive stainless steel hex head cap screws hold EFKB covers to body.
  - — All EFD/EFDB momentary push buttons are supplied with lockout type guards as standard. Hole in guard will accept locks with up to 1/4" hasp. Permits locking of push button to prevent unauthorized operation.
  - — Clearly marked terminals with brass screws assure quick, easy wiring.
- EFD/EFDB Pilot Lights
  - — Factory sealed pilot lights supplied with red jewel/guard assembly and 120 Vac/Vdc, 50/60 Hz, 6 Watt, Type 6S6 lamp.
  - — Models also available in combination with factory sealed push buttons and selector switches.
- EFD/EFDB Selector Switches
  - — Factory sealed selector switches furnished with nylon cam-operated, heavy-duty push buttons for either 2-position or 3-position maintained contact operation.
  - — High thermal and arc resistance, high dielectric strength.
- EDS Push Buttons
  - — Factory sealed — eliminates need for adding sealing fittings and compound at each conduit entrance.
  - — Heavy duty, 10 Amp, 600 Vac.
  - — Switch is enclosed in separate sealing chamber.



EFDB Push Button



EFDB Photocontrol



EDS Rocker Arm Push Button



EFDB Push Button with Dust Cap



EFD Combination Pilot Light and Push Buttons



EFDB Pilot Light



EFDB Selector Switch



EFDB Maintained Push Button

  - — Sealing chamber has smooth, double flanges that mate both to cover and mounting enclosure to provide flame-tight joints.
  - — Pigtail leads from push buttons are factory sealed in sealing well.
  - — Stainless steel hex head screws attach sealing chamber to cover and mounting enclosure.
  - — Side rocker arm push button has lockout holes.
  - — EFD/EFDB backbox supplied with internal ground screw.

Standard Materials

- EFDB control stations: malleable iron body with copperfree (4/10 of 1% max.) aluminum cover
- SPBB push putton: copperfree (4/10 of 1% max.) aluminum upper barrel and phenolic lower barrel with nylon plastic button (dust cap models have neoprene buttons)
- SPLN/SPLS pilot light: copperfree (4/10 of 1% max.) aluminum guard and body assembly; steel clamping ring; and tempered glass jewel
- SSBA selector switch: copperfree (4/10 of 1% max.) aluminum operator mechanism, nylon cam, and sealed phenolic contact block
- EDS control stations: malleable iron body and cover; copperfree (4/10 of 1% max.) aluminum sealing chamber; and nylon operating handle

♦ *Select items suitable for Class I, Division 1 and 2, Groups B, C and D; Class II, Groups E, F and G and Class III. See product selection pages for suitable items.*

EFD/EFDB and EDS Series Factory Sealed Control Stations

Explosionproof, Dust-Ignitionproof

NEC: Class I, Division 1 and 2, Groups B♦, C, D | Class II, Division 1 and 2, Groups E, F, G | Class III | NEMA 3, 7CD, 9EFG

Standard Finishes

- EFD/EFDB control stations: body, triple-coat—(1) zinc electroplate, (2) chromate, and (3) epoxy powder coat
- SPBB push button, SPLN/SPLS pilot light and SSBA selector switch: natural finish
- EDS control stations: body and cover: triple-coat—(1) zinc electroplate, (2) chromate, and (3) epoxy powder coat sealing chamber, natural finish

Options

- 1- or 2-gang copperfree (4/10 of 1% max.) aluminum bodies and covers available. Add suffix – A.
- Three position selector switches with modified operation.
  - — Momentary contact right position, spring return to center, maintained contact left position. Add suffix – SRC.
  - — Momentary contact left position, spring return to center, maintained contact right position. Add suffix – SLC.
  - — Alternate contacts add suffix – ALT.
- EFD/EFDB selector switch lockout locks two or three position handle in any position. Add suffix – LD.
- Push button front operated mushroom head (momentary contact): Order by suffixes for desired color as follows:
  - — Red – NMRBRE
  - — Green – NMRBGR
  - — Black – NMRBBL
- EFD/EFDB pilot light jewel/guard assembly. Order by suffixes if color desired is other than red, as follows:
  - — Amber – JGBA
  - — Blue – JGBB
  - — Clear – JGBC
  - — Green – JGBG;
  - — Opal – JGB0
- For colored LED jewel/guard assembly, order by suffixes:
  - — Red – LEDR
  - — Green – LEDG
  - — Amber – LEDA
- EFD/EFDB pilot light transformers for single pilot light per gang. Order by suffix:

Primary Voltage	Lamp Voltage	Suffix
220	120	– TR-2
277	120	– TR-3
440	120	– TR-4
550	120	– TR-5

- EFD and EDS units may be supplied with brazed hubs as 3-, 4-, and 5-gang in a variety of hub configurations. See Ordering Information page for how to order these and other "custom" units by adding suffixes to mounting body catalog numbers.
- Securing Rod for EFD/EFDB Push Button Lockout Guard. Add suffix – SR.
- NPBRKT Nameplate Mounting Bracket to make circuit description/ identification easy.
  - — Pre-drilled holes in bottom of bracket allow direct mounting to control stations with existing cover bolts.
  - — Pre-drilled holes in middle of bracket allow mounting of customer's circuit identification nameplate; epoxy glue may also be used for mounting (phenolic nameplate not included).
  - — Bracket eliminates costly field installation of drilling and tapping to accommodate circuit identification nameplate.
  - — Brackets fit side-by-side on 2-, 3- and 4-gang boxes and 3-devices.

NEC Certifications and Compliances

- UL Standards: UL 508, UL 698, UL 1203
- cULus Listed: E10449, E81751

Related Products

- For Hazardous Location Photocontrols, see Lighting Section.

Illustrated Features



EDS factory sealed rocker arm push button control station — shows separate sealing chamber and device construction. Rocker arm has holes for lock.



Securing Rod for EFD/EFDB Push Button Lockout Guard — available as an optional item as catalog number NBL-SR (single guard only) or add Suffix – SR to push button catalog number. Lockout Guard, furnished as standard with the EFD/EFDB push button, may also be padlocked.



SPBB factory sealed push button used in EFD/EFDB Series — standard type and unit with dust cap.

SPBB Design Features

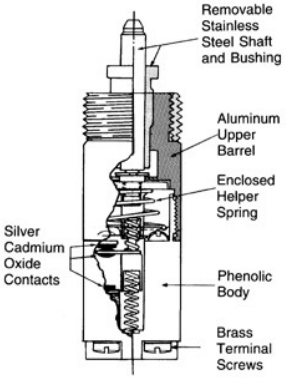

♦ *Select items suitable for Class I, Division 1 and 2, Groups B, C and D; Class II, Groups E, F and G and Class III. See product selection pages for suitable items.*

EMERSON

Visit our website at **www.appleton.emerson.com**.
Contact us at **(800) 621-1506** or **+33 3 22 54 13 90**. | © May 2025

APPLETON

EFD/EFDB and EDS Series Factory Sealed Control Stations

Explosionproof, Dust-Ignitionproof

NEC: Class I, Division 1 and 2, Groups B♦, C, D | Class II, Division 1 and 2, Groups E, F, G | Class III | NEMA 3, 7CD, 9EFG

Catalog Numbering Guide

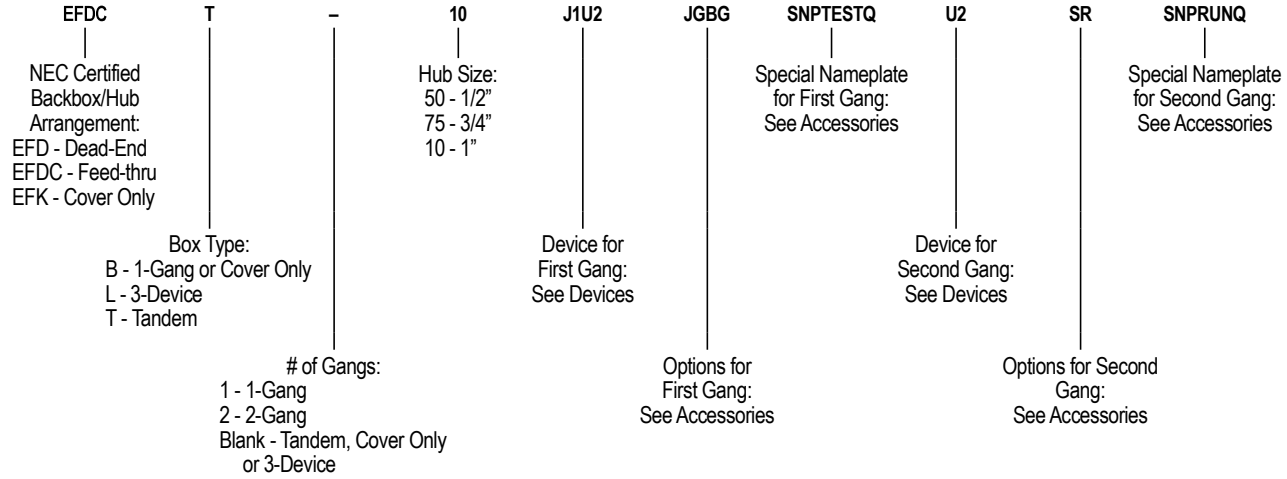

Full Catalog # EFDCT10-J1U2-JGBG-SNPTESTQ-U2-SNPTESTQ-SNPRUNQ

Feed-Thru Tandem Box with 1" Hubs.
In Gang #1: 2 Momentary Push Buttons and a Green Pilot Light.
In Gang #2: 2 Momentary Push Buttons with One Securing Rod.
With Special "Test" and "Run" Push Button Nameplates.

Options

Options Description	Suffix
Momentary Push Button Securing Rod	**SR**
Selector Switch Lockout	**LD**
Spring Return From Right Selector Switch (3 Positions Only)	**SRC**
Spring Return From Left Selector Switch (3 Positions Only)	**SLC**
Alternate Contacts Selector Switch	**ALT**
Change One Red Lens to Green Lens	**JGBG**
Change One Red Lens to Opal Lens	**JGB0**
Change One Red Lens to Amber Lens	**JGBA**
Change One Red Lens to Blue Lens	**JGBB**
Change One Red Lens to Clear Lens	**JGBC**
Add 220/120 Vac Transformer (J1 Device Only)	**TR2**
Add 277/120 Vac Transformer (J1 Device Only)	**TR3**
Add 440/120 Vac Transformer (J1 Device Only)	**TR4**
Add 550/120 Vac Transformer (J1 Device Only)	**TR5**
Change One Red Pilot to Red LED	**LEDR**
Change One Red Lens to Green LED	**LEDG**
Change One Red Lens to Amber LED	**LEDA**
Add Red Mushroom Head to Momentary Push Button	**NMRBRE**
Add Black Mushroom Head to Momentary Push Button	**NMRBBL**
Add Green Mushroom Head to Momentary Push Button	**NMRBGR**
Locking Guard for Maintained Push Button	**SMPBLG**

♦ *Select items suitable for Class I, Division 1 and 2, Groups B, C and D; Class II, Groups E, F and G and Class III. See product selection pages for suitable items.*

EFD/EFDB and EDS Series Factory Sealed Control Stations

Explosionproof, Dust-Ignitionproof

NEC: Class I, Division 1 and 2, Groups B♦, C, D | Class II, Division 1 and 2, Groups E, F, G | Class III | NEMA 3, 7CD, 9EFG

Devices

Device Description	Available in 1-G, 2-G, Tandem	Available in 3-Device	Suffix
One Pilot Light (Red Standard)	Y		**J1**
Two Pilot Lights	Y		**J2**
One Pilot Light and One Momentary Push Button	Y		**J1U1**
One Pilot Light and Two Momentary Push Buttons	Y	Y	**J1U2**
One Pilot Light and One Maintained Push Button	Y		**J1UM1**
One Pilot Light and One Dust Cap Push Button	Y		**J1DU1**
One Pilot Light and One 12 Selector Switch (2 Position, 2 Circuit)	Y		**J112**
One Pilot Light and One 35 Selector Switch (2 Position, 4 Circuit)	Y		**J135**
One Pilot Light and One 102 Selector Switch (3 Position, 2 Circuit)	Y		**J1102**
One Pilot Light and One 345 Selector Switch (3 Position, 4 Circuit)	Y		**J1345**
One Monetary Push Button	Y		**U1**
Two Monetary Push Buttons	Y		**U2**
Two Side-By-Side Momentary Push Buttons	Y		**U2DBL**
Three Monetary Push Buttons	Y	Y	**U3**
One Momentary Push Button and One Maintained Push Button	Y		**U1UM1**
One Momentary Push Button and One Dust Cap Push Button	Y		**U1DU1**
One Momentary Push Button and One 12 Selector Switch (2 Position, 2 Circuit)	Y		**U112**
One Momentary Push Button and One 35 Selector Switch (2 Position, 4 Circuit)	Y		**U135**
One Momentary Push Button and One 102 Selector Switch (3 Position, 2 Circuit)	Y		**U1102**
One Momentary Push Button and One 345 Selector Switch (3 Position, 4 Circuit)	Y		**U1345**
One Maintained Push Button (Mushroom Head - Red)	Y		**UM1**
Two Maintained Push Button	Y		**UM2**
One Maintained and One Dust Cap Push Button	Y		**UM1DU1**
One Maintained Push Button and One 12 Selector Switch (2 Position, 2 Circuit)	Y		**UM112**
One Maintained Push Button and One 35 Selector Switch (2 Position, 4 Circuit)	Y		**UM135**
One Maintained Push Button and One 102 Selector Switch (3 Position, 2 Circuit)	Y		**UM1102**
One Maintained Push Button and One 345 Selector Switch (3 Position, 4 Circuit)	Y		**UM1345**
One Dust Cap Push Button	Y		**DU1**
Two Dust Cap Push Buttons	Y		**DU2**
One Dust Cap and One 12 Selector Switch (2 Position, 2 Circuit)	Y		**DU112**
One Dust Cap and One 35 Selector Switch (2 Position, 4 Circuit)	Y		**DU135**
One Dust Cap and One 102 Selector Switch (3 Position, 2 Circuit)	Y		**DU1102**
One Dust Cap and One 345 Selector Switch (3 Position, 4 Circuit)	Y		**DU1345**
One 12 Selector Switch (2 Position, 2 Circuit)	Y		**12**
One 35 Selector Switch (2 Position, 4 Circuit)	Y		**35**
One 102 Selector Switch (3 Position, 2 Circuit)	Y		**102**
One 345 Selector Switch (3 Position, 4 Circuit)	Y		**345**
120 Vac Photocell	Y		**PC120**
277 Vac Photocell	Y		**PC277**
Three Dust Cap Push Buttons		Y	**DU3**
One Momentary and Two Maintained Push Buttons		Y	**U1UM2**
Two Momentary and One Maintained Push Buttons	Y	Y	**U2UM1**
Three Maintained Push Buttons		Y	**UM3**
Three Pilot Lights		Y	**J3**
Two Pilot Lights and One Momentary Push Button		Y	**J2U1**
One Pilot Light and Two Dust Cap Push Buttons		Y	**J1DU2**
Two Pilot Lights and One Dust Cap Push Button		Y	**J2DU1**
One Pilot Light and Two Maintained Push Buttons		Y	**J1UM2**
Two Pilot Lights and One Maintained Push Button		Y	**J2UM1**

♦ *Select items suitable for Class I, Division 1 and 2, Groups B, C and D; Class II, Groups E, F and G and Class III. See product selection pages for suitable items.*

EMERSON

Visit our website at **www.appleton.emerson.com**.
Contact us at **(800) 621-1506** or **+33 3 22 54 13 90**. | © May 2025

APPLETON

EFD/EFDB Series Factory Sealed Control Stations
Explosionproof, Dust-Ignitionproof

NEC/CEC: **Class I**, Division 1 and 2, Groups B♦, C, D | **Class II**, Division 1 and 2, Groups E, F, G | **Class III** | NEMA 3, 7CD, 9EFG

Nameplates ①

Description	Suffix
Mushroom Head Push Buttons (Maintained and Momentary)	
Start	**MNPSTQ**
Stop	**MNPSPQ**
Emergency Stop	**MNPESTPQ**
Blank	**MNPBQ**
Pilot Light Nameplates	
Blank	**LNPBQ**
Forward	**LNPFWDQ**
Jog	**LNPJ0GQ**
Run	**LNPRUNQ**
Stop	**LNPSPQ**
Start	**LNPSTQ**
Down	**LNPD0WNQ**
Fast	**LNPFASTQ**
Slow	**LNPSL0WQ**
Raise	**LNPRAISEQ**
Lower	**LNPL0WERQ**
Reset	**LNPRESETQ**
Off	**LNP0FFQ**
On	**LNP0NQ**
Reverse	**LNPREVQ**
Close	**LNPCL0SEQ**
Open	**LNP0PENQ**
Up	**LNPUPQ**
Test	**LNPTESTQ**
Low	**LNPL0WQ**
High	**LNPHIGHQ**
Two Position Selection Switch Nameplates	
Forward—Reverse	**SLNPFRQ**
Hand—Auto ②	**SLNPHAQ**
On—Off	**SLNP00**
Start—Stop	**SLNPSS**
Blank	**SLNPBQ**
Up—Down	**SLNPUDQ**
Run—Jog	**SLNPRJQ**
Auto—Hand	**SLNPAHQ**
Off—Remote	**SLNP0RQ**

Description	Suffix
Three Position Selection Switch Nameplates	
Forward-Off-Reverse	**SLNPF0RQ**
Hand—Off—Auto ②	**SLNPH0AQ**
Run—Off—Jog	**SLNPR0JQ**
Blank	**SLNPB3**
Reverse—Off—Forward	**SLNPR0FQ**
Auto—Off—Hand	**SLNPA0HQ**
Hand—Off—Remote	**SLNPH0RQ**
1—Off—2	**SLNP102Q**
Jog—Off—Run	**SLNPJ0RQ**
Stop—Run—Start	**SLNPSRSQ**
Local—Off—Remote	**SLNPL0RQ**
Jog—Off—Auto	**SLNP-J0AQ**
Momentary Push Buttons	
For Rectangular Weatherboot Style Only (Not for round weatherboot style)	
Blank ②	**SNPBQ**
Forward	**SNPFWDQ**
Jog	**SNPJ0GQ**
Run	**SNPRUNQ**
Stop ②	**SNPSPQ**
Start ②	**SNPSTQ**
Down	**SNPD0WNQ**
Fast	**SNPFASTQ**
Slow	**SNPSL0WQ**
Raise	**SNPRAISEQ**
Lower	**SNPL0WERQ**
Reset	**SNPRESETQ**
Off	**SNP0FFQ**
On	**SNP0NQ**
Reverse	**SNPREVQ**
Close	**SNPCL0SEQ**
Open	**SNP0PENQ**
Up	**SNPUPQ**
Test	**SNPTESTQ**
Low	**SNPL0WQ**
High	**SNPHIGHQ**

① Custom nameplates are not available.
② Included as standard (no need to use suffix).
♦ Select items suitable for Class I, Division 1 and 2, Groups B, C and D; Class II, Groups E, F and G and Class III. See product selection pages for suitable items.

EFD/EFDB Series Factory Sealed Control Stations

Explosionproof, Dust-Ignitionproof

10 Amp, 600 Vac Max. for Heavy Duty Use. Furnished with Internal Ground Screw.

NEC/CEC: Class I, Division 1,Groups B♦, C, D | Class I, Division 2, Groups B, C, D | Class II, Division 1 and 2, Groups E, F, G | Class III | NEMA 3, 7CD, 9EFG

	Hub Size (Inches)	Description		Nameplate Marking	Catalog Number Dead-End	Feed-Thru
1-Gang ♦ ① — Momentary Contact						
	1/2	1 Circuit Universal		Start/Stop	**EFDB150-U1**	**EFDCB150-U1**
	3/4				**EFDB175-U1**	**EFDCB175-U1**
	1				**EFDB110-U1**	**EFDCB110-U1**
	1/2	2 Circuits Universal		Start/Stop	**EFDB150-U2**	**EFDCB150-U2**
	3/4				**EFDB175-U2**	**EFDCB175-U2**
	1				**EFDB110-U2**	**EFDCB110-U2**
1-Gang ♦ ① — Red Mushroom Head — Maintained Contact – Emergency Stop Nameplate						
	1/2	1 Circuit Universal		Emergency Stop	**EFDB150-UM1**	**EFDCB150-UM1**
	3/4				**EFDB175-UM1**	**EFDCB175-UM1**
	1				**EFDB110-UM1**	**EFDCB110-UM1**
2-Gang ① — Momentary Contact						
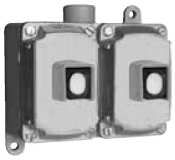	1/2	2 Circuits Universal		Start/Stop	**EFD250-U1**	**EFDC250-U1**
	3/4				**EFD275-U1**	**EFDC275-U1**
	1				**EFD210-U1**	**EFDC210-U1**
	1/2	4 Circuits Universal		Start/Stop	**EFD250-U2**	**EFDC250-U2**
	3/4				**EFD275-U2**	**EFDC275-U2**
	1				**EFD210-U2**	**EFDC210-U2**
3-Device ② — Momentary Contact						
	1/2	3 Circuits Universal		Start/Stop	**EFDL50-U3**	**EFDCL50-U3**
	3/4				**EFDL75-U3**	**EFDCL75-U3**
	1				**EFDL10-U3**	**EFDCL10-U3**

① Malleable iron body and aluminum cover. For aluminum body, add suffix – A.
② Aluminum body not available.

♦ Shaded area indicates items suitable for Class I, Division 1 and 2, Groups B, C and D; Class II, Groups E, F and G and Class III. For Class I, Division 1, Group B, external seals must be installed at each conduit entrance.

EFD/EFDB Series Factory Sealed Control Stations

Combination Push Button and Pilot Light. Explosionproof, Dust-Ignitionproof

10 Amp, 600 Vac Max. for Heavy Duty Use. Momentary Contact. Furnished with Internal Ground Screw.

NEC/CEC: Class I, Division 1 and 2, Groups B♦, C, D | Class II, Division 1 and 2, Groups E, F, G | Class III | NEMA 3, 7CD, 9EFG

		Hub Size (Inches)	Description		Nameplate Marking	Catalog Number Dead-End	Catalog Number Feed-Thru
1-Gang ♦ ①							
		1/2	1 Circuit Universal and 1 Pilot Light		Start/Stop	**EFDB150-J1U1**	**EFDCB150-J1U1**
		3/4				**EFDB175-J1U1**	**EFDCB175-J1U1**
		1				**EFDB110-J1U1**	**EFDCB110-J1U1**
		1/2	2 Circuit Universal and 1 Pilot Light		Start/Stop	**EFDB150-J1U2**	**EFDCB150-J1U2**
		3/4				**EFDB175-J1U2**	**EFDCB175-J1U2**
1 Circuit, 1 Pilot Light	**2 Circuit, 1 Pilot Light**	1				**EFDB110-J1U2**	**EFDCB110-J1U2**
2-Gang							
		1/2	2 Circuit Universal and 1 Pilot Light		Start/Stop	**EFD250-J1U2**	**EFDC250-J1U2**
		3/4				**EFD275-J1U2**	**EFDC275-J1U2**
		1				**EFD210-J1U2**	**EFDC210-J1U2**
		1/2	2 Circuit Universal and 2 Pilot Lights		Start/Stop	**EFD250-J2U2**	**EFDC250-J2U2**
		3/4				**EFD275-J2U2**	**EFDC275-J2U2**
2 Circuit, 1 Pilot Light	**2 Circuit, 2 Pilot Light**	1				**EFD210-J2U2**	**EFDC210-J2U2**
3-Device ②							
		1/2	2 Circuit Universal and 1 Pilot Light		Start/Stop	**EFDL50-J1U2**	**EFDCL50-J1U2**
		3/4				**EFDL75-J1U2**	**EFDCL75-J1U2**
		1				**EFDL10-J1U2**	**EFDCL10-J1U2**
		1/2	1 Circuit Universal and 2 Pilot Lights	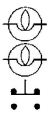	Start/Stop	**EFDL50-J2U1**	**EFDCL50-J2U1**
		3/4				**EFDL75-J2U1**	**EFDCL75-J2U1**
2 Circuit, 1 Pilot Light	**1 Circuit, 2 Pilot Lights**	1				**EFDL10-J2U1**	**EFDCL10-J2U1**
2-Gang Tandem ②							
		1/2	2 Circuit Universal and 1 Pilot Light	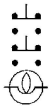	Start/Stop	**EFDT50-J1U2**	**EFDCT50-J1U2**
		3/4				**EFDT75-J1U2**	**EFDCT75-J1U2**
		1				**EFDT10-J1U2**	**EFDCT10-J1U2**
		1/2	2 Circuit Universal and 2 Pilot Lights		Start/Stop	**EFDT50-J2U2**	**EFDCT50-J2U2**
		3/4				**EFDT75-J2U2**	**EFDCT75-J2U2**
2 Circuit, 2 Pilot Lights	**2 Circuit, 1 Pilot Light**	1				**EFDT10-J2U2**	**EFDCT10-J2U2**

For tandem bodies, external seals must be installed within 1.5 meters (5 feet) of each conduit entrance for Class I, Groups C and D.
Pilot Lights furnished with 6 Watt, 120 Vac 6S6 lamp and red jewel—Other colored jewels and LED's listed under accessories and parts.

① Malleable iron body and aluminum cover. For aluminum body, add suffix – A.
② Aluminum body not available.

♦ Shaded area indicates items suitable for Class I, Division 1 and 2, Groups B, C and D; Class II, Groups E, F and G and Class III. For Class I, Division 1, Group B, external seals must be installed at each conduit entrance.

EDS Series Factory Sealed Control Stations

Push Button. With Rocker Arm Handle. Explosionproof, Dust-Ignitionproof

10 Amp, 600 Vac Max. for Heavy Duty Use. Furnished with Internal Ground Screw.

NEC/CEC: **Class I**, Division 1,Groups B♦, C, D | **Class I**, Division 2, Groups B, C, D | **Class II**, Division 1 and 2, Groups E, F, G | **Class III** | NEMA 3, 7CD, 9EFG

	Hub Size (Inches)	Description		Nameplate Marking	Catalog Number Dead-End	Catalog Number Feed-Thru
1-Gang ♦ – Malleable Iron Body and Cover ① — Momentary Contact						
 1 Circuit  2 Circuit	1/2	1 Circuit Universal		Specify	EDS150-RU1	EDSC150-RU1
	3/4				EDS175-RU1	EDSC175-RU1
	1				EDS110-RU1	EDSC110-RU1
	1/2	2 Circuits Universal		Specify	—	EDSC150-RU2
	3/4				EDS175-RU2	EDSC175-RU2
	1				EDS110-RU2	EDSC110-RU2
2-Gang – Malleable Iron Body and Cover ① — Momentary Contact						
 2 Circuit	1/2	2 Circuits Universal		Specify	—	EDSC250-RU1
	3/4				EDS275-RU1	EDSC275-RU1
	1				EDS210-RU1	EDSC210-RU1
 4 Circuit	1/2	4 Circuits Universal		Specify	—	EDSC250-RU2
	3/4				EDS275-RU2	EDSC275-RU2
	1				EDS210-RU2	EDSC210-RU2

	Description		Nameplate Marking	Catalog Number Cover Assembly	Catalog Number Switch Only
Cover and Chamber with Device — Momentary Contact *When installed on a 1/2" or 3/4" single gang box the cover assembly is suitable for use in Group B environments but will not be marked Group B.*					
	1 Circuit Universal		Specify	EFK-RU1-Q	EFSR-U1Q
	2 Circuits Universal		Specify	EFK-RU2-Q	EFSR-U2Q

① *For aluminum body add suffix – A (Not suitable for Class I, Group B).*

♦ *Shaded area indicates items suitable for Class I, Group B, in addition to Class I, Groups C and D; Class II, Groups E, F, and G; and Class III.*

EFD/EFDB Series Factory Sealed Control Stations

Dust Cap Push Button. Explosionproof, Dust-Ignitionproof

10 Amp, 600 Vac Max. for Heavy Duty Use. Momentary Contact. Furnished with Internal Ground Screw.

NEC/CEC: Class I, Division 1 and 2, Groups B♦, C, D | Class II, Division 1 and 2, Groups E, F, G | Class III | NEMA 3, 7CD, 9EFG

	Hub Size (Inches)	Description		Nameplate Marking	Catalog Number Dead-End	Feed-Thru
1-Gang ①						
	3/4	1 Circuit Universal		Start/Stop	**EFDB175-DU1**	**EFDCB175-DU1**
	1				**EFDB110-DU1**	**EFDCB110-DU1**
	3/4	2 Circuits Universal		Start/Stop	**EFDB175-DU2**	**EFDCB175-DU2**
	1				**EFDB110-DU2**	**EFDCB110-DU2**
3-Device ②						
	3/4	2 Circuits Universal and 1 Pilot Light		Start/Stop	**EFDL75-J1DU2**	**EFDCL75-J1DU2**
	1				**EFDL10-J1DU2**	**EFDCL10-J1DU2**

① *Malleable iron body and aluminum cover. For aluminum body, add suffix – A.*
② *Aluminum body not available.*

♦ *Shaded area indicates items suitable for Class I, Groups B, C and D; Class II, Groups E, F, and G; and Class III. For Class I, Group B external seals must be installed at each conduit entrance.*

EFD/EFDB Series Factory Sealed Control Stations

Pilot Lights. Explosionproof, Dust-Ignitionproof

Pilot Light Furnished with 6 Watt, 120 Vac 6S6 Lamp and Red Jewel.† Furnished with Internal Ground Screw.

NEC/CEC: Class I, Division 1,Groups B♦, C, D | Class I, Division 2, Groups B, C, D | Class II, Division 1 and 2, Groups E, F, G | Class III | NEMA 3, 7CD, 9EFG

	Hub Size (Inches)	Description		Catalog Number Dead-End	Feed-Thru
1-Gang ♦ ③					
	1/2	One Pilot Light		**EFDB150-J1**	**EFDCB150-J1**
	3/4			**EFDB175-J1**	**EFDCB175-J1**
	1			**EFDB110-J1**	**EFDCB110-J1**
	1/2	Two Pilot Lights		**EFDB150-J2**	**EFDCB150-J2**
	3/4			**EFDB175-J2**	**EFDCB175-J2**
	1			**EFDB110-J2**	**EFDCB110-J2**
2-Gang ①					
	1/2	Two Pilot Lights		**EFD250-J1**	**EFDC250-J1**
	3/4			**EFD275-J1**	**EFDC275-J1**
	1			**EFD210-J1**	**EFDC210-J1**
	1/2	Four Pilot Lights	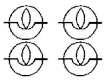	**EFD250-J2**	**EFDC250-J2**
	3/4			**EFD275-J2**	**EFDC275-J2**
	1			**EFD210-J2**	**EFDC210-J2**
3-Device ②					
	1/2	Three Pilot Lights	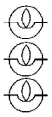	**EFDL50-J3**	**EFDCL50-J3**
	3/4			**EFDL75-J3**	**EFDCL75-J3**
	1			**EFDL10-J3**	**EFDCL10-J3**
2-Gang Tandem ②					
 **Two Pilot Lights**  **Four Pilot Lights**	1/2	Two Pilot Lights		**EFDT50-J1**	**EFDCT50-J1**
	3/4			**EFDT75-J1**	**EFDCT75-J1**
	1			**EFDT10-J1**	**EFDCT10-J1**
	1/2	Four Pilot Lights	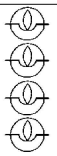	**EFDT50-J2**	**EFDCT50-J2**
	3/4			**EFDT75-J2**	**EFDCT75-J2**
	1			**EFDT10-J2**	**EFDCT10-J2**

① Malleable iron body and aluminum cover. For aluminum body, add suffix – A.
② Aluminum body not available. For tandem bodies, external seals must be installed within 1.5 meters (5 feet) of each conduit entrance for Class I, Groups C and D.
③ Other colored jewels, pilot lights and LED's listed under accessories and parts.

♦ Shaded area indicates items suitable for Class I, Groups B, C and D; Class II, Groups E, F, and G; and Class III. For Class I, Division 1, Group B, external seals must be installed at each conduit entrance.

EMERSON.

Visit our website at **www.appleton.emerson.com**.
Contact us at **(800) 621-1506** or **+33 3 22 54 13 90**. | © May 2025

APPLETON

EFDB Series Factory Sealed Control Stations

Selector Switches and Photocontrols. Explosionproof, Dust-Ignitionproof

10 Amp, 600 Vac Max. for Heavy Duty Use. Furnished with Internal Ground Screw.

NEC/CEC: Class I, Division 1 and 2, Groups B♦, C, D | Class II, Division 1 and 2, Groups E, F, G | Class III | NEMA 3, 7CD, 9EFG

	Hub Size (Inches)	Description	Diagram Left	Diagram Center	Diagram Right	Catalog Number Dead-End	Catalog Number Feed-Thru
2 Position Selector Switches — 1-Gang ♦ ① — Maintained Contact							
 Nameplate: Hand—Auto	1/2	2 Position, 2 Circuit		None		**EFDB150-12**	**EFDCB150-12**
	3/4					**EFDB175-12**	**EFDCB175-12**
	1					**EFDB110-12**	**EFDCB110-12**
	1/2	2 Position, 4 Circuits		None		**EFDB150-35**	**EFDCB150-35**
	3/4					**EFDB175-35**	**EFDCB175-35**
	1					**EFDB110-35**	**EFDCB110-35**
3 Position Selector Switches — 1-Gang ♦ ① — Maintained Contact							
Three position units can be supplied for momentary contact right position, spring return to center, maintained contact left position. Add suffix – SRC.							
 Nameplate: Hand—Off—Auto	1/2	3 Position, 2 Circuit				**EFDB150-102**	**EFDCB150-102**
	3/4					**EFDB175-102**	**EFDCB175-102**
	1					**EFDB110-102**	**EFDCB110-102**
	1/2	3 Position, 4 Circuits				**EFDB150-345**	**EFDCB150-345**
	3/4					**EFDB175-345**	**EFDCB175-345**
	1					**EFDB110-345**	**EFDCB110-345**

Selector Switches Nameplates ②



Two Position



Three Position

Two Position Nameplates		Three Position Nameplates	
Forward—Reverse	**SLNP-FRQ**	Forward—Off—Reverse	**SLNP-F0RQ**
Hand—Auto	**SLNP-HAQ**	Hand—Off—Auto	**SLNP-H0AQ**
On—Off	**SLNP-00**	Run—Off—Jog	**SLNP-R0JQ**
Start—Stop	**SLNP-SS**	Blank	**SLNP-B3**
Blank	**SLNP-BQ**	Reverse—Off—Forward	**SLNP-R0FQ**
Up—Down	**SLNP-UDQ**	Auto—Off—Hand	**SLNP-A0HQ**
Run—Job	**SLNP-RJQ**	Hand—Off—Remote	**SLNP-H0RQ**
Auto—Hand	**SLNP-AHQ**	1—Off—2	**SLNP-102Q**
Off—Remote	**SLNP-0RQ**	Jog—Off—Run	**SLNP-J0RQ**
Local Remote	**SLNP-LRQ**	Stop—Run—Start	**SLNP-SRSQ**
Off—On	**SLNP-0F0N**	Local—Off—Remote	**SLNP-L0RQ**
		Jog—Off—Auto	**SLNP-J0AQ**

Selector Switch Locking Devices — Permit locking in any position



Description	Catalog Number
Two or Three Positions	**SBL-3-Q**

① Malleable iron body and aluminum cover. For aluminum body add suffix – A (Suitable for Class I, Division 1 and 2, Group B — single gang only).
② Custom nameplates are not available.

♦ Shaded area indicates items suitable for Class I, Division 1 and 2, Groups B, C and D; Class II, Groups E, F and G and Class III. For Class I, Division 1, Group B, external seals must be installed at each conduit entrance.

EFDB Series Factory Sealed Control Stations

Selector Switch Cover Assemblies. Explosionproof, Dust-Ignitionproof

10 Amp, 600 Vac Max. for Heavy Duty Use.

NEC/CEC: Class I, Division 1,Groups B♦, C, D | Class I, Division 2, Groups B, C, D | Class II, Division 1 and 2, Groups E, F, G | Class III | NEMA 3, 7CD, 9EFG

EFDB Selector Switch Operator/Switch Assembly — Maintained Contact ①

	Thread Size (In., NPSM)	Description	Diagram Left	Center	Right	Catalog Number Switch Assembly Only	Switch Assembly with Cover
2 Position							
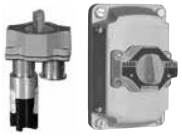 Nameplate: Hand—Auto	1/2	2 Position, 2 Circuit		None		SSBA1-2Q	EFKB-12
	1/2	2 Position, 4 Circuits		None		SSBA2-2Q	EFKB-35
3 Position							
 Nameplate: Hand—Off—Auto	1/2	3 Position, 2 Circuit				SSBA1-3Q	EFKB-102
	1/2	3 Position, 4 Circuit				SSBA2-3Q	EFKB-345

EFDB Selector Switch Operator/Switch Assembly — Modified Operations ①

	Thread Size (In., NPSM)	Description	Diagram Left	Center	Right	Catalog Number Switch Assembly Only	Switch Assembly with Cover
3 Position							
Momentary contact right position. Spring return to center. Maintained contact left position.							
Note: Standard legend plate reads Hand/Off/Auto							
 2 Circuit	1/2	3 Position, 2 Circuit				SSBAS-1-3	EFKB-102-SRC
	1/2	3 Position, 4 Circuits				SSBAS-2-3	EFKB-345-SRC
Momentary contact left position. Spring return to center. Maintained contact right position.							
Note: Standard legend plate reads Auto/Off/Hand							
 4 Circuit	1/2	3 Position, 2 Circuit				SSBASL-1-3	EFKB-102-SLC
	1/2	3 Position, 4 Circuits				SSBASL-2-3	EFKB-345-SLC
Momentary contact right position. Spring return to center. Maintained contact left position.							
Note: Standard legend plate reads Stop/Run/Start							
	1/2	3 Position, 4 Circuits				SSBASRA-2-3	EFKB-637-SRC

① *When installed on a single gang box the cover assembly is suitable for use in Group B environments but will not be marked Group B.*

♦ *Select items suitable for Class I, Division 1 and 2, Groups B, C and D; Class II, Groups E, F and G and Class III. See product selection pages for suitable items.*

EFD/EFDB and EDS Series Factory Sealed Control Stations

EFKB Covers With Pilot Lights and/or Push Buttons. For EFD Bodies

NEC/CEC: **Class I**, Division 1 and 2, Groups C, D | **Class II**, Division 1 and 2, Groups E, F, G | **Class III**

	Description		Nameplate Marking	Catalog Number
Cover complete with Push Button — Factory Sealed — Momentary Contact ①②				
For use on standard EFD bodies				
 EFKB-U1  EFKB-U2	1 Circuit Universal		Start/Stop	**EFKB-U1**
	2 Circuit Universal		Start/Stop	**EFKB-U2**
Cover complete with Red Mushroom Head Push Button — Factory Sealed — Maintained Contact ①②				
For use on standard EFD bodies – Emergency Stop Nameplate				
	1 Circuit Universal (Red)		Emergency Stop	**EFKB-UM1**
Cover complete with Pilot Lights — Factory Sealed — Momentary Contact ①②				
6 Watt, 120 Vac, Type 6S6 Lamp. For use on standard EFD bodies				
 J1U2  J1U1	One pilot light (red jewel ③) and two universal push buttons		Start/Stop	**EFKB-J1U2**
	One pilot light (red jewel ③) and one universal push button		Start/Stop	**EFKB-J1U1**
	One pilot light (red jewel ③) and one universal push button–dust cap		Start/Stop	**EFKB-J1DU1**
 J1  J2	One pilot light (red jewel ③)		Start/Stop	**EFKB-J1**
	Two pilot lights (red jewels ③)	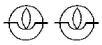	Start/Stop	**EFKB-J2**
 PC	Photocontrol relay cover (120 Vac)			**EFKB-PC120**
	Photocontrol relay cover (208-277 Vac)			**EFKB-PC277**

① All covers are copperfree aluminum. Supplied with four captive stainless steel bolts.
② When installed on a single gang box the cover assembly is suitable for use in Group B environments but will not be marked Group B.
③ Colored jewels, pilot lights and LED's listed under accessories and parts

EFD/EFDB and EDS Series Factory Sealed Control Stations

ESK/EFK Covers For Pilot Lights, Push Buttons, or Selector Switches.

NEC/CEC: **Class I**, Division 1 and 2, Groups C, D | **Class II**, Division 1 and 2, Groups E, F, G | **Class III**

Covers Only — for use on standard EFD bodies

Supplied with 4 cover bolts and blank cover nameplate.

	Description	Catalog Number
Push Button or Pilot Light Covers — 3/4" Tapped Openings ①		
 ESKB-1PBQ  ESKB-2PBQ	One opening: one push button or one pilot light	**ESKB-1PBQ**
	Two openings: two push buttons, two pilot lights, or one of each	**ESKB-2PBQ**
 EFKL-3HQ	Three openings: three device (EFDL) three push buttons or three pilot lights, or combination of push button(s) and pilot light(s)	**EFKL-3HQ** ②
Push Button or Selector Switch Cover — 1/2" Tapped Openings ①		
	Two openings: selector switch or two push buttons	**ESKB-2SPQ**
Push Button, Pilot Light or Selector Switch Covers — 3/4" top and 1/2" Bottom Tapped Openings ①		
 ESKB-3JPBQ  ESKB-BQ	One top and two bottom openings: one pilot light, two push buttons; one pilot light, one selector switch.	**ESKB-3JPBQ**
	Blank	**ESKB-BQ**

Nameplate Mounting Bracket

Note: Mount bracket between cover screws and cover. Do not mount bracket between ground joint flame path between cover and backbox.



Bracket with blank silver/black nameplate for EFDB series	**NPBRKT-EFDB**
Bracket with blank silver/black nameplate for 3-device EFD series	**NPBRKT-C0NT**

To order bracket with control station, add suffix –NPBRKT to end of catalog number.

To order engraved nameplates, add desired markings after catalog number. Maximum of 2 lines with 12 characters (including spaces) per line.

① *All covers are copperfree aluminum. Supplied with four captive stainless steel bolts.*
② *Catalog number EFKL-3HQ supplied with 6 stainless steel non-captive bolts.*

EFD/EFDB and EDS Series Factory Sealed Control Stations

EFD/EFDB Push Button Accessories and Parts

NEC/CEC: **Class I**, Division 1 and 2, Groups B, C, D | **Class II**, Division 1 and 2, Groups E, F, G | **Class III**

	Description			Catalog Number
Push Button, Factory Sealed — Momentary Contact				
	10 Amp 600 Vac Heavy Duty 1/2" thread size (NPSM). Furnished with 1/2" to 3/4" enlarger, Weather Boot, Guard, Start, Stop and Blank Nameplates.			
 SPBB-U1-Q  SPBB-U2DBL	Single Push Button	Universal		**SPBB-U1-Q**
	Double Push Button	Universal		**SPBB-U2DBL**
Push Button, Red, Factory Sealed — Maintained Contact				
	*10 Amp 600 Vac Heavy Duty 1/2" thread size (NPSM). Furnished with 1/2" to 3/4" enlarger and Emergency Stop Nameplate (guard not furnished).*			
	Single Push Button	Universal		**SMPB-U1-Q**
Rectangular Button with Weather Boot				
	Furnished with Start, Stop and Blank Nameplates			**NBN-WB**

	Description		Nameplate Marking	Catalog Number
Push Button and Replacement Cap				
	Has 1/2 - 14 thread size (NPSM). Supplied with 1/2" to 3/4" enlarger.			
 SPBB-DU1-Q  DC-Q	Dust Cap - Push Button		STOP-START-BLANK	**SPBB-DU1-Q**
	Replacement Dust Cap Only		STOP-START-BLANK	**DC-Q**
 STOP-START-BLANK	Nameplate		STOP-START-BLANK	**DU-NP-Q**
Covers Complete with Pilot Lights, Push Buttons — Factory Sealed				
	When installed on a single gang box the cover assembly is suitable for use in Group B environments but will not be marked Group B.			
 EFKB-DU1  EFKB-DU2	1 Circuit Universal		Specify	**EFKB-DU1**
	2 Circuits Universal		Specify	**EFKB-DU2**
	2 Circuits Universal and 1 Pilot Light		Specify	**EFKL-J1DU2** ①

① *For use with three device mounting bodies.*

EFD/EFDB and EDS Series Factory Sealed Control Stations

EFD/EFDB Push Button Accessories and Parts

NEC/CEC: Class I, Division 1 and 2, Groups B, C, D | Class II, Division 1 and 2, Groups E, F, G | Class III

	Description			Catalog Number
Nameplates for Rectangular Push Buttons				
 SNP-OFF-Q	Blank	**SNP-B-Q**	Off	**SNP-0FF-Q**
	Forward	**SNP-FWD-Q**	On	**SNP-0N-Q**
	Jog	**SNP-J0G-Q**	Reverse	**SNP-REV-Q**
	Run	**SNP-RUN-Q**	Open	**SNP-0PEN-Q**
	Stop	**SNP-SP-Q**	Close	**SNP-CL0SE-Q**
	Start	**SNP-ST-Q**	Up	**SNP-UP-Q**
	Down	**SNP-D0WN-Q**	Test	**SNP-TEST-Q**
 SNP-ON-Q	Fast	**SNP-FAST-Q**	Low	**SNP-L0W-Q**
	Slow	**SNP-SL0W-Q**	High	**SNP-HIGH-Q**
	Raise	**SNP-RAISE-Q**		
	Lower	**SNP-L0WER-Q**		
	Reset	**SNP-RESET-Q**		
Push Button Replacement Locking Guards — Glass Reinforced Polypropylene — Gasketed				
 Maintained Switch Guard	*Has hole for 1/4" hasp.*			
Single Guard 	Single Guard (Maintained Switch)			**SMPB-LG**
	Single Guard			**NPB-LG1**
 Double Guard	Double Guard			**NPB-LG2**
Push Button Securing Rod with Chain — Stainless Steel				
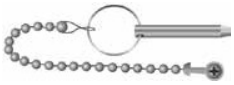	For use with Single Guard Only			**NBL-SR**
Mushroom Button with Weather Boot for Use with Momentary Contact — Gasketed				
	Black			**NMRB-BL**
	Green			**NMRB-GR**
	Red			**NMRB-RE**
Mushroom Button				
	**For Use with Maintained Contact — Solid-Colored Nonmetallic Button**			
	Red			**NMRBM-RE**
	Nameplates For Momentary and Maintained Mushroom Head Push Button			
 MNPESTPQ	Start			**MNPSTQ**
	Stop			**MNPSPQ**
	Emergency Stop			**MNPESTPQ**
	Blank			**MNPBQ**

EFD/EFDB and EDS Series Factory Sealed Control Stations

EFD/EFDB Push Button Accessories

NEC/CEC: **Class I**, Division 1 and 2, Groups B♦, C, D | **Class II**, Division 1 and 2, Groups E, F, G | **Class III**

	Description	Catalog Number
Pilot Light, Factory Sealed		
 Pilot Light  Chamber Only	**Incandescent**	
	Furnished with 6S6 120 Vac incandescent lamp, jewel and guard. Has 457 mm (18") long, type SFF-2 pigtail leads; +150 °C (+302 °F). Body has 3/4" straight thread (NPSM).	
	With Red Jewel	**SPLSREB**
	With Green Jewel	**SPLSGRB**
	With Amber Jewel	**SPLSAMB**
	With Blue Jewel	**SPLSBLB**
	With Clear Jewel	**SPLSCLB**
	With Opal Jewel	**SPLS0PB**
	LED	
	Furnished with candelabra base 120 Vac LED, jewel and guard. Has 457 mm (18") long, type SFF-2 pigtail leads; +150 °C (+302 °F). Body has 3/4" straight thread (NPSM).	
	With Red LED, Clear Jewel	**SPLNSREB**
	With Green LED, Clear Jewel	**SPLNSGRB**
	With Amber LED, Clear Jewel	**SPLNSAMB**
	Chamber Only (Same as above, less jewel, guard and lamp)	**SPLSSCB**
Pilot Light Jewel/Guard Assembly		
	*The below catalog numbers indicate an assembly of the Pilot Light Jewels and Guards. Jewels and Guards are not available as separate items.*	
	Amber Jewel/Guard	**JGBNA**
	Blue Jewel/Guard	**JGBNB**
	Clear Jewel/Guard	**JGBNC**
	Green Jewel/Guard	**JGBNG**
	Opal Jewel/Guard	**JGBN0**
	Red Jewel/Guard	**JGBNR**
Replacement Bulbs		
 EPL-B6W  EPLLEDR	**Incandescent Clear Bulbs**	
	Furnished with candelabra base. 6 Watt, 120 Vac, Type 6S6	**EPL-B6W**
	LED Replacements	
	Furnished with candelabra base. 120 Vac, 10 mA.	
	Red LED	**EPLLEDR**
	Green LED	**EPLLEDG**
	Amber LED	**EPLLEDA**
Transformer		
 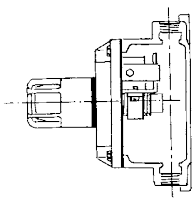	*Add suffix below to control station or cover catalog number for factory installed transformer. Order catalog number for pilot light field installation. Transformer clamps directly to pilot light barrel. Only one pilot light transformer assembly per one gang body.*	

Primary Vac	Lamp Vac	Catalog Number/ Suffix
220	120	TR2
277	120	TR3
440	120	TR4
550	120	TR5

♦ *Suitable for Class I, Group B when installed in an enclosure rated for Class I, Group B.*

EFD/EFDB and EDS Series Factory Sealed Control Stations

EFD/EFDB Push Button Accessories

NEC/CEC: Class I, Division 1 and 2, Groups B, C, D | Class II, Division 1 and 2, Groups E, F, G | Class III

	Description	Catalog Number
Nameplates for Pilot Light		
	Blank	**LNPBQ**
	Forward	**LNPFWDQ**
	Jog	**LNPJ0GQ**
	Run	**LNPRUNQ**
	Stop	**LNPSPQ**
	Start	**LNPSTQ**
	Down	**LNPD0WNQ**
	Fast	**LNPFASTQ**
LNPRUNQ	Slow	**LNPSL0WQ**
	Raise	**LNPRAISEQ**
	Lower	**LNPL0WERQ**
	Reset	**LNPRESETQ**
	Off	**LNP0FFQ**
	On	**LNP0NQ**
	Reverse	**LNPREVQ**
	Close	**LNPCL0SEQ**
	Open	**LNP0PENQ**
	Up	**LNPUPQ**
	Test	**LNPTESTQ**
	Low	**LNPL0WQ**
	High	**LNPHIGHQ**

EFD/EFDB and EDS Series Factory Sealed Control Stations

Mounting Bodies

Furnished with Internal Ground Screw. ①

NEC/CEC: Class I, Division 1 and 2, Groups C, D | Class II, Division 1 and 2, Groups E, F, G | Class III | NEMA 7CD, 9EFG

	Type	Hub Size (Inches)	Catalog Number Malleable Iron	Aluminum
1-Gang				
	Dead-End	1/2	EFD150NLQ	EFD150ANLQ
		3/4	EFD175NLQ	EFD175ANLQ
		1	EFD110NLQ	EFD110ANLQ
	Feed-Thru	1/2	EFDC150NLQ	EFDC150ANLQ
		3/4	EFDC175NLQ	EFDC175ANLQ
		1	EFDC110NLQ	EFDC110ANLQ
2-Gang				
	Dead-End	1/2	EFD250NLQ	EFD250ANLQ
		3/4	EFD275NLQ	EFD275ANLQ
		1	EFD210NLQ	EFD210ANLQ
	Feed-Thru	1/2	EFDC250NLQ	EFDC250ANLQ
		3/4	EFDC275NLQ	EFDC275ANLQ
		1	EFDC210NLQ	EFDC210ANLQ
Tandem ②				
	Dead-End	1/2	EFDT50NLQ	—
		3/4	EFDT75NLQ	—
		1	EFDT10NLQ	—
	Feed-Thru	1/2	EFDCT50NLQ	—
		3/4	EFDCT75NLQ	—
		1	EFDCT10NLQ	—
3-Device				
	Dead-End	1/2	EFDL50Q	—
		3/4	EFDL75Q	—
		1	EFDL10Q	—
	Feed-Thru	1/2	EFDCL50Q	—
		3/4	EFDCL75Q	—
		1	EFDCL10Q	—
Blank Bodies for Brazed Hubs ③				
	1-Gang		EFD1NL	—
	2-Gang		EFD2NL	—
	3-Gang		EFD3NL	—
	4-Gang		EFD4NL	—
	5-Gang		EFD5NL	—

Construct complete catalog numbers per EFD Cast Device Boxes Ordering Information on following page. Hubs will be located in center of walls and evenly spaced unless otherwise specified. Where spacings are critical, submit sketch showing exact spacing requirements.

① 1-Gang, 2-Gang, and 5-Gang bodies only.
② For tandem bodies, external seals must be installed within 1.5 meters (5 feet) of each conduit entrance for Class I, Groups C and D.
③ Blank EFD bodies are Non-UL Listed.

EFD/EFDB and EDS Series Factory Sealed Control Stations

EFD Cast Device Box Ordering Information. Blank Bodies for Brazed Threaded Hubs

1-, 2-, 3-, 4- and 5-Gang Boxes. Brazed Threaded Hubs for Rigid Conduit, 1/2" thru 1"; Brazed Union Hubs, 1/2" thru 1".

NEC/CEC: **Class I**, Division 1 and 2, Groups B, C, D | **Class II**, Division 1 and 2, Groups E, F, G | **Class III**

Determine catalog number as follows:
(1) Select EFD device box catalog number;
(2) Select "Standard Hub Arrangement Diagram" number; and
(3) Select symbols that represent hub sizes from "Symbol Table." (Use "0" where no hub is required, and separate the various divisions of the complete catalog number by dashes.)

Example
The blank body device box selected is EFD3NL and the hub arrangement is diagram #8. Hub "a" is to be 3/4" brazed threaded; hub "b", 1" brazed threaded; hub "c", 3/4" brazed threaded; hub "d", no hub is required; and hub "e", 1" brazed union. The complete catalog number will be: EFD–3NL–8–23203E

If a "Standard Hub Arrangement" is not suitable for the application, or when hubs are to be more accurately spaced, submit sketch locating hubs (1) from centerlines of walls and (2) from outside back of box (or from mounting lug surface if lugs are supplied).

All hubs will be located in centerlines of walls and evenly spaced unless notherwise specified.

Symbol Table

Hub Size (Inches)	Brazed Threaded Hub Symbol	Brazed Union Hub Symbol
Blank	0	0
1/2	1	1E
3/4	2	2E
1	3	3E

Standard Hub Arrangement Diagrams
Hub "a" is always TOP of box

2-, 3-, 4- and 5-Gang (Front View)

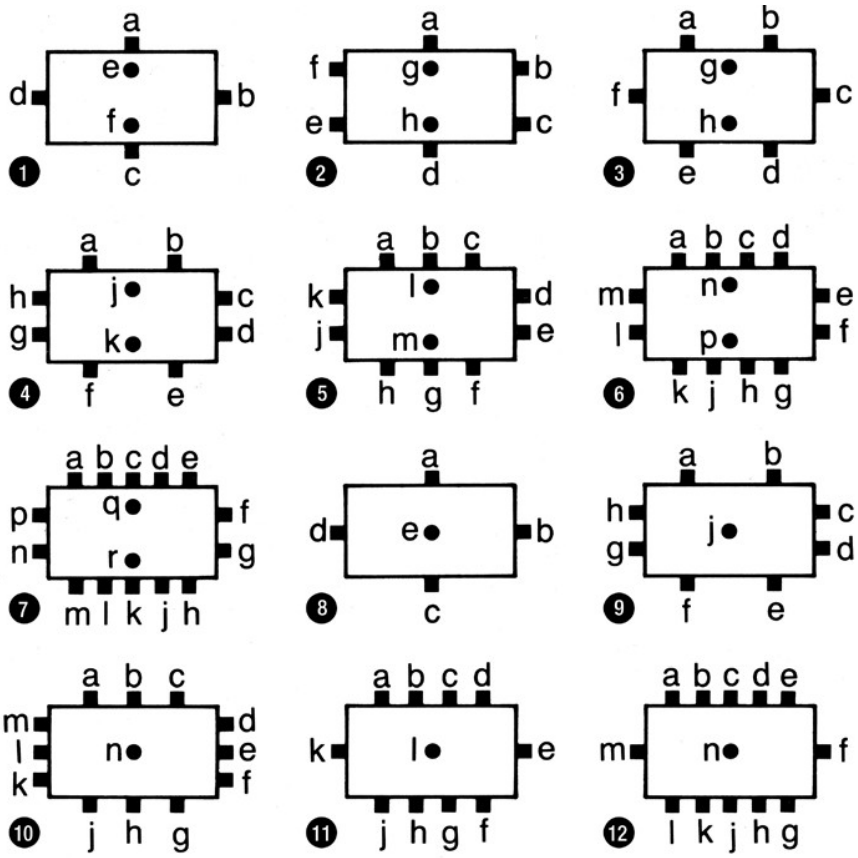

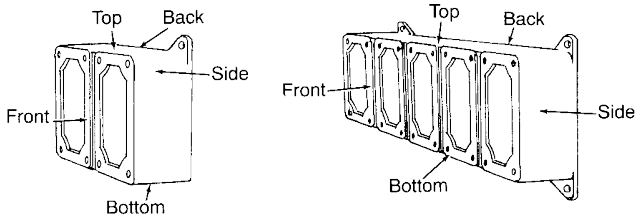

1-Gang (Front View)

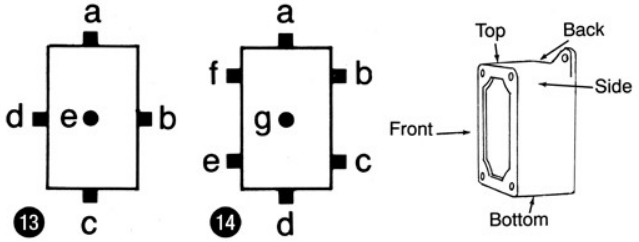

EFD/EFDB and EDS Series Factory Sealed Control Stations

EFD/EFDB 1- and 2-Gang

NEC/CEC: Class I, Division 1 and 2, Groups C, D | Class II, Division 1 and 2, Groups E, F, G | Class III | NEMA 7CD, 9EFG

Dimensions in Millimeters (Inches)

EFD/EFDB — 1- and 2-Gang Combination Pilot Light and Push Buttons

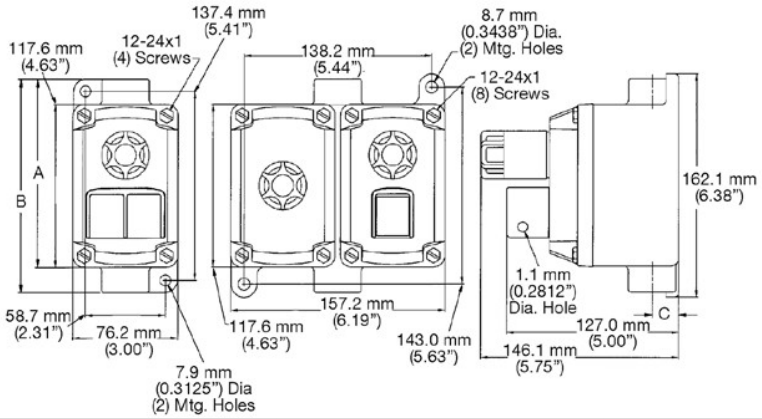

EFD/EFDB — 1-Gang Dust Cap Push Button and 1-Gang Maintained Contact Push Button

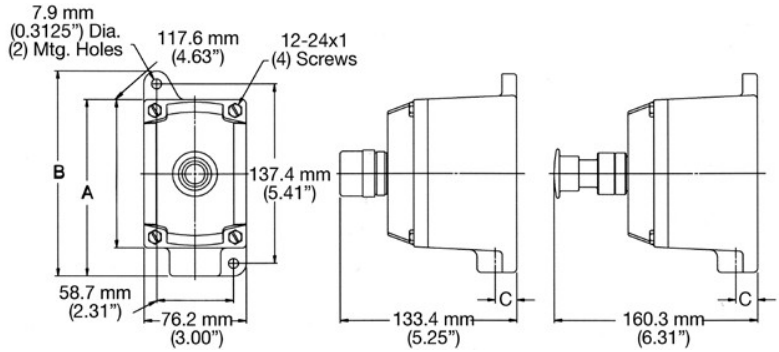

EDS — 1- and 2-Gang Rocker Arm Push Button

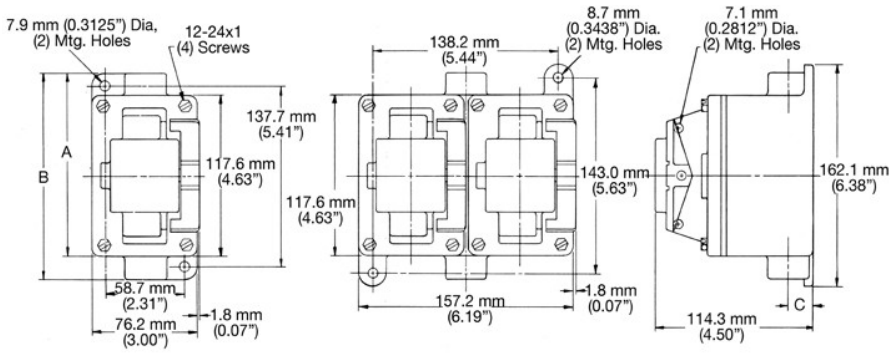

Hub Size (Inches)	A	B	C
1/2 and 3/4	136.7 (5.38)	155.7 (6.13)	19.8 (0.78)
1	139.7 (5.50)	160.3 (6.31)	23.9 (0.94)

EFD/EFDB and EDS Series Factory Sealed Control Stations

EFD 3-Device and 2-Gang Tandem

NEC/CEC: **Class I**, Division 1 and 2, Groups C, D | **Class II**, Division 1 and 2, Groups E, F, G | **Class III** | NEMA 7CD, 9EFG

Dimensions in Millimeters (Inches)

EFD — 3-Device Pilot Light and Push Buttons

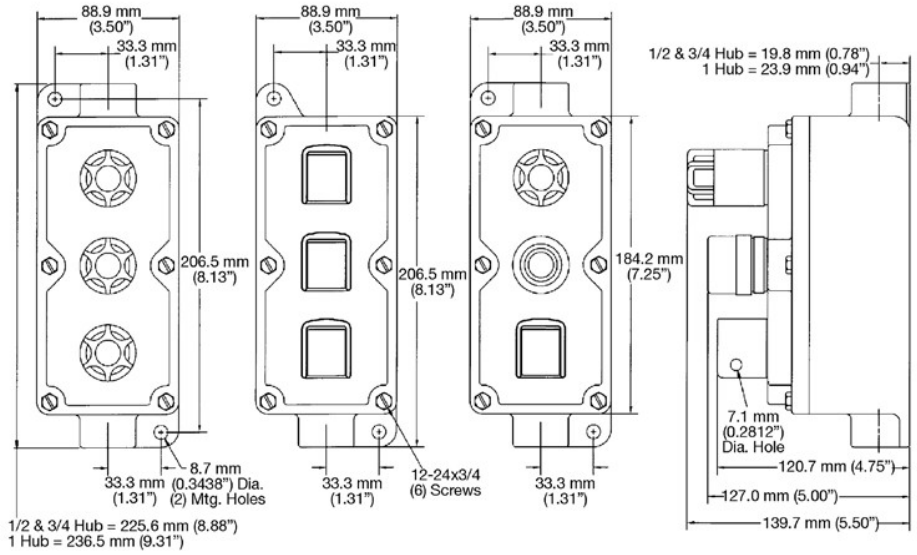

EFD — 2-Gang Tandem Pilot Light and Push Buttons

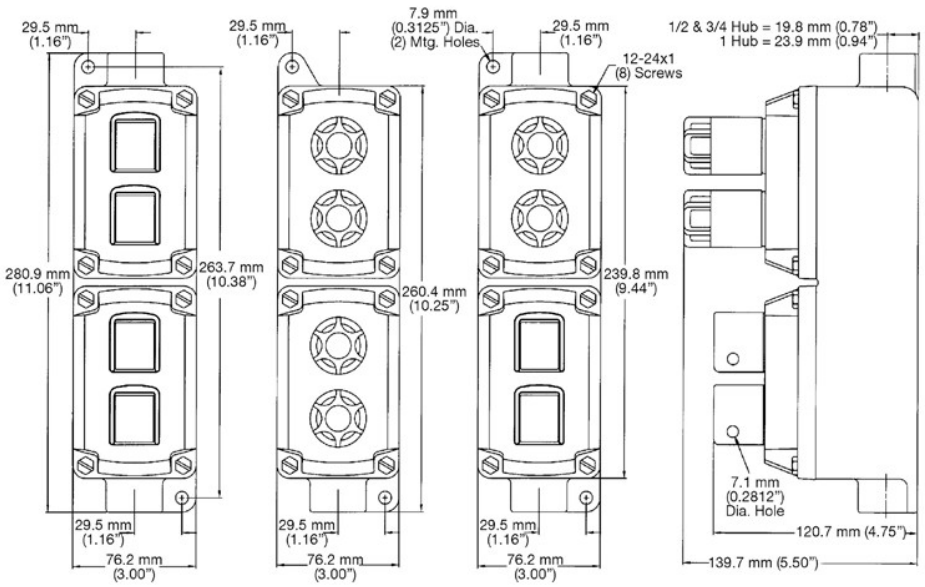

EMERSON

Visit our website at **www.appleton.emerson.com**.
Contact us at **(800) 621-1506** or **+33 3 22 54 13 90**. | © May 2025

APPLETON

EFD/EFDB and EDS Series Factory Sealed Control Stations
Mounting Bracket

NEC/CEC: **Class I**, Division 1 and 2, Groups C, D | **Class II**, Division 1 and 2, Groups E, F, G | **Class III** | NEMA 7CD, 9EFG

Dimensions in Millimeters (Inches)

NPBRKT Nameplate Mounting Bracket

