We reserve all rights to this drawing, to any patents or patent registrations related hereto, and to the duplication, retransmission by third parties and misc. use. Any use of this drawing is not permitted without the written consent of STABILUS.

Intended for internal use and customer

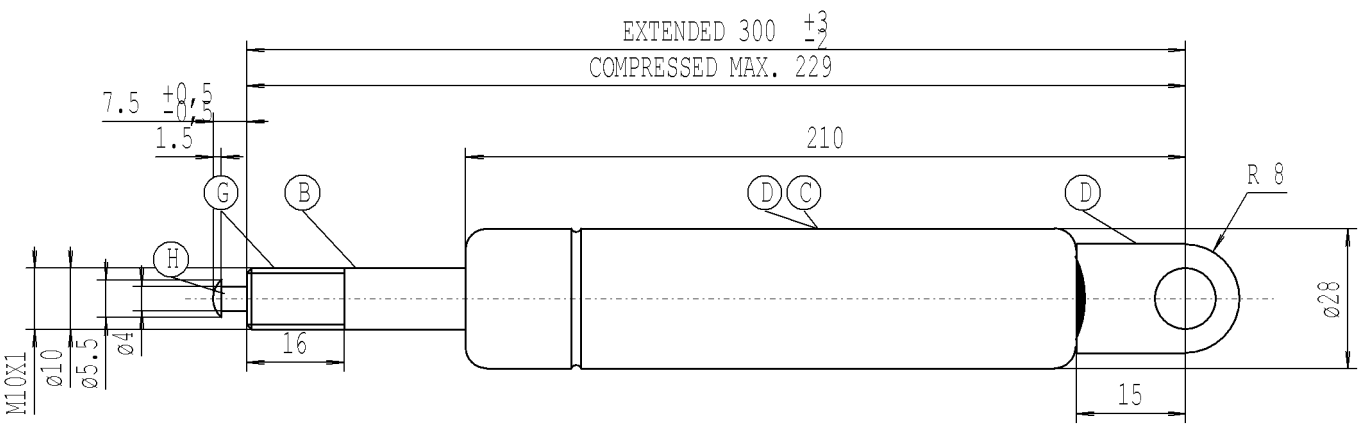

STABILUS
BLOC-O-LIFT

NICHT OEFFNEN HOHER DRUCK
DO NOT OPEN HIGH PRESSURE
Stabilus Standard

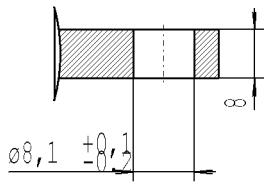

- -the Gas Spring must not be mechanically modified or damaged.
- -The warning label must not be removed or obscured.
- -compression and extension forces measured acc. to STAB-Spec. 10009033
- -Spring test with piston rod downwards
- -Protect piston rod from dirt, paint and damage
- -Disposal acc. to STAB-Spec.10009375
- -Drawing not true-to-scale
- -Locking force at +20° C
  in extension 900 N
  in compression 13000 N
- -release-force of valve acc. to STAB-Spec. 10005233
- -Observe installation instructions according to STAB-Spec. 10005593
- -Permissible operating temperature range -30°C to +80°C
- -Installation: position any as required
- -To release:
  press dia. pin by min. 2.5 mm
  Locking:
  release the pin completely
- -Press release max. 6.0 mm

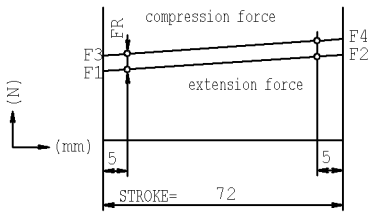

FRmax=F3-F1

X=F2/F1=1,41
Nozzle ø1.2

Forces (statically measured)

F1 (N)	F4 max (N)	FR max (N)
extension force	compression force	friction
200±40	450	80

B	Nislide black
C	print white
D	black painted
G	max. tightening torque: 25 Nm
H	bonderized

CHANGE	
NEW	SERIE
OLD	VERSUCH
CHG.NO.	661526
NAME	15.09.17 SCHNASS
NO.	1

DIMENSIONS WITHOUT TOLERANCE +/-1

BLOC-O-LIFT

06 31 1024 20 072

Unregistered Copy
Print-out is not subject to the modification service

STABILUS

Modifications in favour of technical process reserved

DRAWING	CHECKED
DATE 14.09.2017	NAME C.Imbria

Document No. 10248286

066953 E

***** Druckdatum: 07.07.2022 / 08:09:42 ***** Ausdruck nicht massgetreu *****